• **Melbourne**

Unit B2
2A Westall Rd
Springvale
VIC 3171
Tel (03) 9562 7577

sales.vic@pertronic.com.au

• **Sydney**

Unit 19
287 Victoria Rd
Rydalmere
NSW 2116
Tel (02) 9638 7655

sales.nsw@pertronic.com.au

• **Brisbane**

Unit 3
43-49 Sandgate Rd
Albion
QLD 4010
Tel (07) 3255 2222

sales.qld@pertronic.com.au

• **Adelaide**

65 Manton St
Hindmarsh
SA 5007
Tel (08) 8340 9533

sales.sa@pertronic.com.au

• **Perth**

3/71 Beringarra Ave
Malaga
WA 6090
Tel (08) 6555 3008

www.pertronic.com.au

PERTRONIC
LOOP RESPONDER
(SMD)
TECHNICAL MANUAL
AUSTRALIA

Valid For Loop Responders:

PCB Hardware: v3.06 and greater [SMD version]
PCB Firmware: v5.0 and greater

Issue 12

The contents of this manual are copyright.

This document is to be used only for operating *Pertronic Loop Responder* systems.

This document is not to be reproduced, photocopied or passed in part or whole to a third party without the express, written authorisation of Pertronic Industries Pty Ltd

Acronyms:

AVF	Alarm Verification Facility	A facility designed to minimise ‘false alarms’. Upon activation of a detector, software resets the circuit or detector, waiting for further triggering.
EOL	End of Line	End-of-line termination, normally a resistor, used by a panel or other control equipment to monitor the presence and integrity of a circuit or loop
LPRS	LooP ReSponder	Term for Loop Responder that may be displayed by connected fire alarm panels.

Glossary:

Mode	Configuration set by the main rotary switch S4.
‘Smoke Mode’ or ‘Conventional”	The Loop Responder is set up for devices which “clamp” the M-voltage to a level related to the particular device, such as Smoke Detectors. Sometimes referred to as AS4428, AS7250 or “conventional” operation.
‘Switch Mode’	The Loop Responder is set up for devices which “switch” between open and short-circuit, such as toggle switches, relay contacts.
F100A	Pertronic F100A series Fire Alarm Panel
F120A	Pertronic F120A series Fire Alarm Panel
F220	Pertronic F220 series Fire Alarm Panel

CONTENTS

1. INTRODUCTION 1
   - 1.1 Functional Description 1
   - 1.2 Loop Responder Block Diagram and PCB 2
   - 1.3 Loop Responder Specifications 3
2. SYSTEM FEATURES 5
   - 2.1 ‘Smoke Mode’ or ‘Switch Mode’ Input Selection 5
   - 2.2 ‘Smoke Mode’ Circuits 5
   - 2.3 ‘Switch Mode’ Circuits 6
   - 2.4 Loop and External Power Supply 6
   - 2.5 Loop Connection Limitations 7
   - 2.6 Relay Output 8
   - 2.7 Addressing 9
   - 2.8 Loop Short Isolation 9
   - 2.9 7-segment display 10
   - 2.10 Changing the “Circuit” voltage 11
   - 2.11 ‘Smoke Mode’ Circuit Datum Levels 12
   - 2.12 ‘Switch Mode’ Circuit Datum Levels 15
   - 2.13 Loop Responder Fault Notification 17
   - 2.14 Rebooting a Loop Responder 18
3. DETECTOR COMPATIBILITY 19
   - 3.1 Circuit Operation 19
   - 3.2 ‘Smoke Mode’ Circuit and AVF 19
   - 3.3 Detector Limitations 24
4. LOOP RESPONDER INSTALLATION DIAGRAMS 25
   - 4.1 Loop Responder PCB Layout 25
   - 4.2 Externally Powered Connection Diagram: 25
   - 4.3 ‘Smoke Mode’ Circuit – typical connections 26
   - 4.4 ‘Switch Mode’ Circuit – typical connections 26
   - 4.5 Monitored Speaker Switch 26
5. PRODUCT CODES 27

Index of Figures

Figure 1-1: Loop Responder Block Diagram 2

Figure 1-2 Loop Responder PCB 2

Figure 2-1 Location of Mode and Base Address Selection Switches 5

Figure 2-2 Loop Powered Connection 7

Figure 2-3 Externally powered connection 7

Figure 2-4 Location of Mode and Base Address Selection Switches 9

Figure 2-5 Seven Segment Display Location 11

Figure 2-6: Circuit Voltage Option Link 11

Figure 2-7 Smoke Mode Circuit 'M-Level' Datum Voltage: Alarm and Fault Trip Levels (20v) 13

Figure 2-8 Smoke Mode Circuit 'M-Level' Datum Voltage: Alarm and Fault Trip Levels 14

Figure 2-9 Switch Mode Circuit M point voltage and Circuit Load (20 Volts) 15

Figure 2-10 Switch Mode Circuit M point voltage and Circuit Load (23 Volts) 16

Figure 3-1: AVF Timing Diagram: Smoke Detector in 'Alarm': Panel AVF In-Active 21

Figure 3-2: AVF Timing Diagram: Smoke Detector in 'Alarm': Panel AVF Active 22

Figure 3-3: AVF Timing Diagram: Smoke Detector with 'Transient Smoke': Panel AVF In-Active 23

Figure 4-1 Loop Responder PCB Layout - shows the location of key components 25

Figure 4-2 Externally Powered Connection Diagram 25

Figure 4-3 Conventional Detector Circuit 26

Figure 4-4 Switch Input Circuit 26

Figure 4-5: Monitored Speaker Switch 26

Index of Tables

Table 2-1 Configuration options 5

Table 2-2 Seven segment display information 10

Table 2-3 ‘Smoke Mode’ Circuit State (20.0Vdc supply) 12

Table 2-4 Loop Responder ‘Switch Mode’ Circuit Levels (20.0Vdc supply) 15

Table 2-5: Loop Responder Fault Notifications 17

Table 3-1: Detector Limitations on the Conventional Circuit 24

Table 5-1: Product Codes 27

1. INTRODUCTION

1.1 Functional Description

The ***Loop Responder*** is used primarily to interface zones of conventional detectors into Pertronic analogue addressable fire alarm systems.

The ***Loop Responder*** has inputs which may be used in either of the following modes:

- 'Smoke mode' to monitor conventional circuits containing smoke and/or heat detectors and manual call-points.
- 'Switch mode', to monitor Sprinkler Valve interference switches or beam detectors, to read the fault and alarm status of VESDA detector systems, or to receive commands from a SCADA system, or similar device.

> **NOTE:**
> When the panel is configured using 'Learn', a Loop Responder in 'Switch Input' mode defaults to 'Type: MCP'.
> The Loop Responder should be reconfigured as a more appropriate type than MCP, such as Switch Input, Isolate Input, or another configuration.

The **Loop Responder** also has a general-purpose relay that may be mapped as a Loop Relay and utilised by the panel—either as one set of clean change-over (Form-C) contacts, or a monitored speaker switch connection to a 100V line.

The ***Loop Responder*** uses either 5 or 9 module loop addresses—the first 4 or first 8 for input circuits, and the 5th or 9th for the relay.

A limited number of **Loop Responders** may be powered from the loop. When large numbers of **Loop Responders** are required, they should be powered from power supplies which are electrically isolated from the Panel power supply; each power supply must only be used on devices on the same loop. This provides the **F100A**, **F120A** and **F220** Panels with the capability for connecting a large number of conventional detectors.

1.2 Loop Responder Block Diagram and PCB

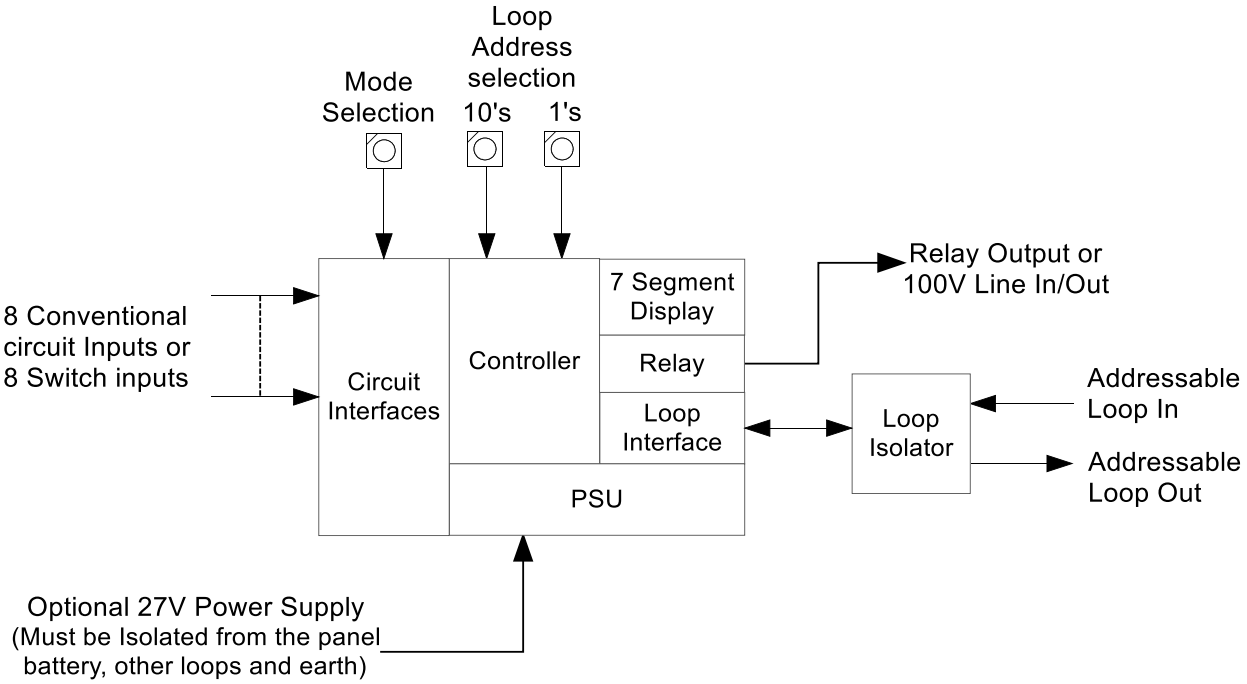

Figure 1-1: Loop Responder Block Diagram

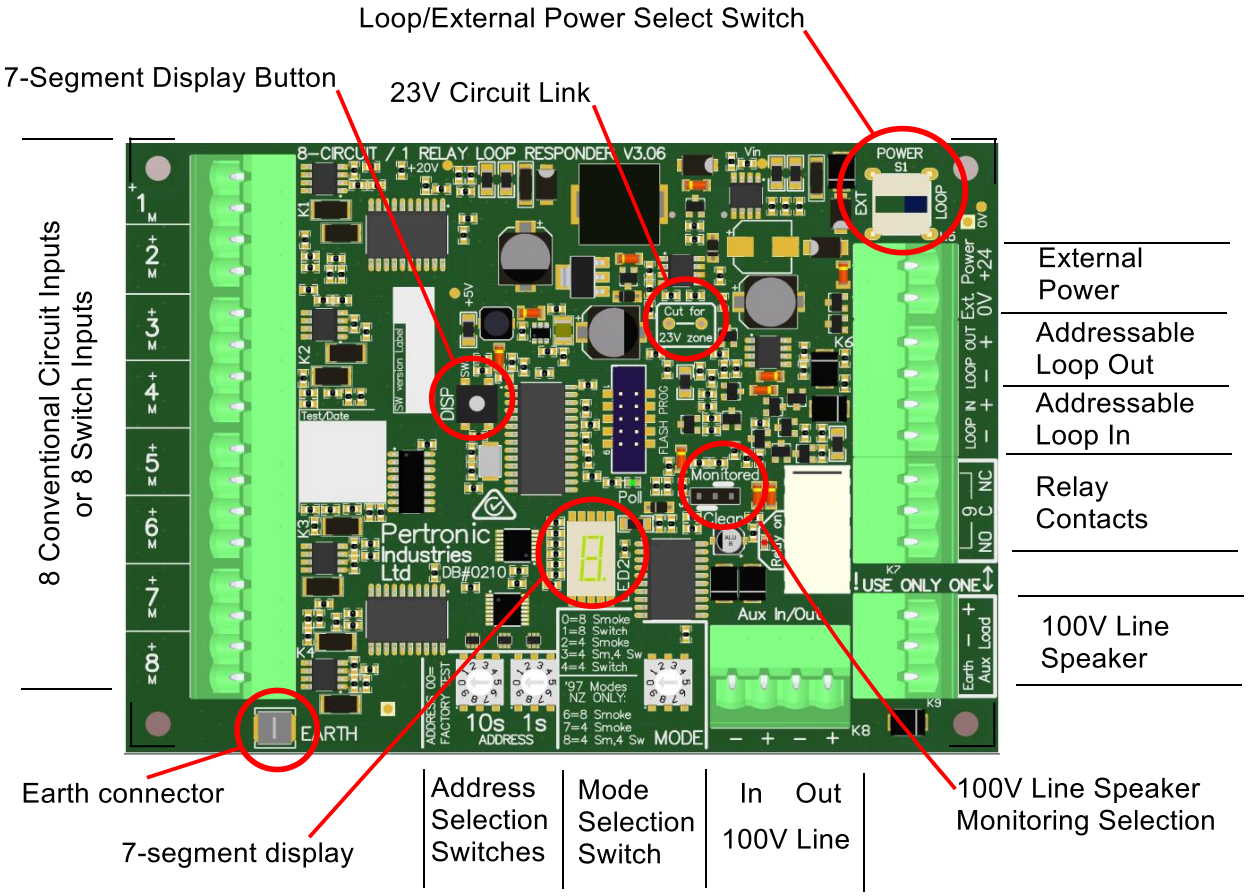

Figure 1-2: Loop Responder PCB

1.3 Loop Responder Specifications

PCB: 137.5 x 97.5 mm H x W

Optional Cabinet: 254 x 310 x 70 mm H x W x D

Weight: 1.6kg

Material: 1.2 mm mild steel, powder coated.

Circuits: 4 or 8 smoke circuits and/or 4 or 8 switch inputs (selectable) for each responder. Selection is determined by the Mode switch.

The circuit voltage is nominally 20Vdc.

For 'Smoke mode' or 'conventional circuits', manual call-points and heat detectors short the circuit when operated; smoke detectors clamp the voltage at 4.5V to 8.0V across the circuit, depending on the model of detector which has operated.

The circuit 'M' voltage, when 'Normal', will vary between 1.0V and 4.5V, depending on the detector load. Up to 40 System Sensor smoke and/or heat detectors may be installed per circuit, with unlimited manual call-points.

When configured as 'Switch Input', an equivalent circuit resistance <500Ω, will generate an alarm.

Relay Output: Either one (1) changeover contact rated 2.0A @ 30Vdc
or a monitored 100V speaker line switch rated at 0.5A @ 125Vac.
Monitored/unmonitored setting is Link selectable. A 10kΩ EOL Resistor is required when monitored.

External Power An external power supply 16–28Vdc, 1A minimum, may be used to supply the Loop Responder power. This allows more Loop Responders to be connected to a loop than can be supported by the loop power available from the panel. Power source selection is made on the PCB using switch S1 labelled "External Power / Loop Power".
The external supply must be isolated from the panel battery, isolated from other loops and isolated from Earth.

DC Current: Switch S1 (labelled "External Power / Loop Power") on the Loop Responder selects whether the circuit is powered from the analogue loop or from an isolated external power supply.

S1 in the **Loop Power** position**:**

The analogue loop will supply the circuit (the loop voltage must be >16V). The loop responder will draw a base current of 30mA @ 24V from the loop (no detectors, 10kΩ EOL Resistor).

'Smoke Mode' Input Configuration:

- Add 2mA for each group of 20 detectors.
  (Refer to **Table 3-1: Detector Limitations on the Conventional Circuit**)
- Add 20mA for activated smoke alarms on each circuit
- Short circuits add no extra current.

'Switch Mode' Input Configuration:

- For open and short circuits, add no extra current.

Note: In ‘Switch Mode’ mode, a resistance <500Ω generates an ‘Alarm’.

NOTE:

- The maximum total loop current allowed for all connected loop devices is 350mA per loop.
- Use this current limit to determine the number of Loop Responders that can be installed on each loop.
- Allow for the current contributed by activated smoke detector circuits when used.
- The loop voltage must not fall below 16V under ‘Alarm’ conditions.

Refer to loading examples in section 2.4 Loop and External Power Supply.

S1 in the **External Power** position**:**

The analogue loop powers the processor and loop interface components (the loop voltage must be >16V).

The loop responder will draw a base current of 5mA @ 24V from the loop.

The external power supply powers each detector circuit.

‘Smoke Mode’ Input Configuration:

- Add 2mA for each group of 20 detectors.
  (Refer to **Table 3-1: Detector Limitations on the Conventional Circuit**)
- Add 20mA for activated smoke alarms on each circuit.
- Short circuits add no extra current.

‘Switch Mode’ Input Configuration:

- For open and short circuits, add no extra current.

Note: In ‘Switch Mode’ a resistance <500Ω generates an ‘Alarm’.

Addressing: Each ***Loop Responder*** uses 5 or 9 address spaces, depending on the Mode Switch setting, See Table 2-1: Configuration **options**.

- Addresses 1 to 4 (or 8) are allocated to input circuits 1 to 4 (or 8) respectively.
- Address 5 (or 9) is allocated to the relay.

The Address switches select the base or start address for the Loop Responder which corresponds to the address for Circuit 1.

Poll LED: The Green Poll LED flashes when the panel polls the Loop Responder. It also flashes during reset (start up) for 10 to 20 seconds.
If it flashes continuously, the board is in factory test mode, see section 2.7 Addressing

Earth Connection: Connection of the Earth terminal to electrical earth is recommended, where possible, for enhanced noise immunity to electrical surges and interference.

2. SYSTEM FEATURES

2.1 'Smoke Mode' or 'Switch Mode' Input Selection

The Mode switch is used to select the function of the inputs. The Mode switch is located at the centre-bottom of the **Loop Responder** PCB. Refer to: **Figure 2-1: Location of Mode and Base Address Selection Switches**.

Mode Rotary Switch Position	Function
0	All 8 Zones Smoke Mode
1	All 8 Zones configured as Switch Mode inputs
2	Zones 1-4, Smoke Mode and Zones 5-8 inactive (that is, a 4-circuit responder)
3	Zones 1-4, Smoke Mode and Zones 5-8 configured as Switch Mode inputs
4	Zones 1-4 Configured as Switch Mode Inputs and Zones 5-8 inactive (i.e. a 4-input switch responder)
5	Spare (equivalent to setting 0)
6	Spare (equivalent to setting 0)
7	Spare (equivalent to setting 0)
8	Spare (equivalent to setting 0)
9	Spare (equivalent to setting 0)

Table 2-1: Configuration options

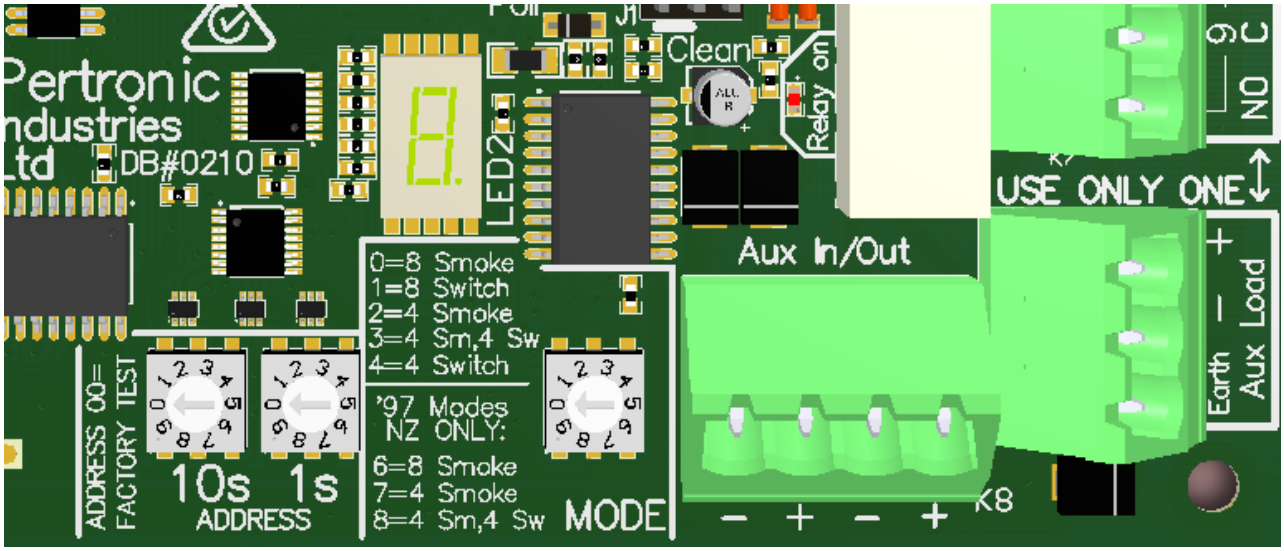

Figure 2-1: Location of Mode and Base Address Selection Switches

2.2 'Smoke Mode' Circuits

The following applies to mode 0, circuits 1 – 8, and to mode 2 or 3, circuits 1 – 4:

- A 10kΩ End Of Line Resistor (EOL) is required for each circuit.
- During 'Normal' operation, the 'M' point on the circuit will vary between 1.0V and 4.5V, depending on the detector load. Up to 40 System Sensor smoke and/or heat detectors and an unlimited number of manual call-points may be installed per circuit.

- System Sensor smoke and heat detectors clamp the detector voltage at 4.5V to 12V across the circuit, depending on the model and number of detectors which have activated; this gives a circuit ‘M’ voltage in ‘Alarm’ state between 8.0V and 18.5V.
- Manual Call-Points short the circuit when operated giving a circuit ‘M’ voltage in ‘Alarm’ state >18.5V. The Loop Responder will report a MCP Alarm.
- The Loop Responder has internal AVF (Automatic Verification Facility). When a detector activates, the Loop Responder resets that circuit, and ‘arms’ the circuit for 100 seconds. If the detector activates within this 100 second period, the Loop Responder reports an ‘Alarm’ to the panel.
- When a user operates auto-learning from the panel’s menu, the configuration of each circuit defaults to Type “LPRS” (which is an abbreviation of LooP ReSponder).
- Refer to Table 2-3 ‘Smoke Mode’ Circuit State (20.0Vdc supply) for the datum settings (‘M-Level’ voltage) of a Loop Responder circuit operating in Smoke Mode.

2.3 ‘Switch Mode’ Circuits

The following comments apply for mode 1, circuits 1–8; mode 2, circuits 5-8; and mode 4, circuits 1–4:

- A 10kΩ End of Line resistor is required for each circuit.
- When the Loop Responder is configured as ‘Switch Input’, a circuit resistance less than 500Ω will generate an ‘Alarm’; a circuit resistance greater than 12kΩ will generate a ‘Fault’.

By default, these circuits are configured as Type MCP in the F100A, F120A or F220. Each circuit should be reconfigured, if necessary, to a more appropriate type, for example, to a Switch Input.

Refer to Table 2-4 Loop Responder ‘Switch Mode’ Circuit Levels (20.0Vdc supply)

for the datum settings (‘M-Level’ voltage) of a Loop Responder operating in Switch Mode.

For a wiring guide refer to Figure 4-4 Switch Input Circuit.

2.4 Loop and External Power Supply

Switch **S1**, located at the top right of the ***Loop Responder*** PCB, is used to select whether the detector circuits are powered from the Analogue Loop or an isolated, external power supply.

The microprocessor and Loop interface components are always powered from the Loop, but by using **S1**, either the Loop or an External Power Supply may be selected to power the Loop Responder circuits. This reduces the power requirement from the Analogue Loop when a number of Loop Responders or a large number of detectors are used.

The maximum total loop current available for all connected loop devices is 350mA per loop.

When the **Loop Power** position on switch **S1** is selected (Figure 2-2 Loop Powered Connection), the Analog Loop supplies the power required by the Loop Responder circuits.

When the **External Power** position on switch **S1** is selected (Figure 2-3 Externally powered connection), the external supply provides the power required by the circuits. Note that separate, isolated supplies must be used for responders on different loops. Refer to Figure 4-2 Externally Powered Connection Diagram for a connection diagram.

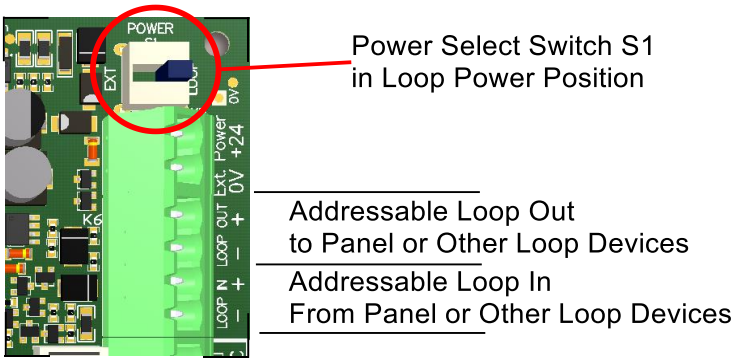

Figure 2-2 Loop Powered Connection

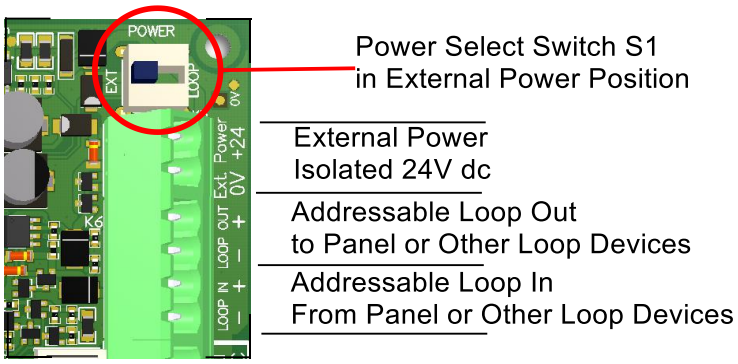

Figure 2-3 Externally powered connection

2.5 Loop Connection Limitations

a) Power Supplied from the Analogue Loop only:

Loop power required for each Loop Responder (no external supply), 24Vdc, 30mA (no detectors, 10kΩ EOL resistor only).

For '**Smoke Mode' operation:**

Add 2mA for each group of 20 smoke or heat detectors.
Add 20mA for activated detectors for each circuit
A short circuit adds no extra current.

Loop Powered: example 1 (10 Responders – Switch Input types):

10 Responders at 30mA each require	10 x 30mA =	300mA
	Loop Power Total	**300mA**

50mA is available for other loop devices

Loop Powered: example 2 (3 Responders – Smoke detector types):

3 Responders at 30mA each require	3 x 30 =	90mA
3 x 8 circuits with 20 detectors each require	3 x 8 x 2 =	48mA
Allow 5 activated detectors	5 x 20 =	100mA
	Loop Power Total	**238mA**

112mA is available for other loop devices.

For '**Switch Mode' operation:** add no extra current.

b) Power supplied from an isolated external power supply:

Loop power required for each Responder using an isolated external supply—24V dc, 5mA. (The external supply powers the circuits.)

Isolated external supply current for each Loop Responder to power the circuits:

24V, 25mA (no detectors, 10kΩ EOL resistor only).
Add 2mA for each group of 20 detectors.
Add 20mA for activated detectors for each circuit.
A short circuit adds no extra current.

Isolated External Supply example (8 Responders):

8 Responders require	8 x 5 =	40mA
	Loop Power Total	**40mA**
	310mA is available for other loop devices.	
8 Responders at 25mA each require	8 x 25 =	200mA
8 x 8 circuits with 20 detectors each require	8 x 8 x 2 =	128mA
Allow 5 activated detectors	5 x 20 =	100mA
	External Supply Total	**428mA**

c) Loop Voltage-Drop Considerations:

The loop voltage at the Responder must be greater than 16V under worst-case conditions.

To calculate the voltage drop between the panel loop-driver and the Loop Responder, assume the following conditions:

- The loop is open at one end.
- The Responder is closer to the open end of the loop.
- The battery voltage is low (20V) which gives a loop driving voltage of 18V.
- The loop conductor resistance is 37.5 ohm for each 1000m of 1mm^2 cable.

Under these conditions, a voltage drop of just 2V is allowed between the panel and the Responder.

If the Responder was the only device on the loop and it took 150mA under alarm conditions (normally 30mA), the maximum length of cable (using 1mm^2 conductors) allowable between the panel and the Loop Responder would be:

- The resistance for a voltage drop of 2V is:
  (2V / 150mA) = (2 / 0.150) = 13.3 ohms.
- The maximum length of 1 mm^2 cable that may be used is
  (13.3 / 37.5) = 0.347Km = 347m.
  (without external DC power for the Responder.)

2.6 Relay Output

One of two available relay outputs may be used:

Either a non-monitored set of dry output contacts.

The relay may be configured as any of the available types used in the ***F100A***, ***F120A or F220*** Panel (AUX, RLY, DHR, SND, etc).

The relay has one clean changeover contact (NC-C-NO), rated 2.0A @ 30Vdc - Form C.

Or, a monitored set of speaker contacts connecting to the 100V line input rated 0.5A @ 125Vac.

The relay may be configured as any of the available types used in the ***F100A***, ***F120A or F220*** Panel (AUX, AUXM, RLY, RLYM, WRN, WRNM etc).

The monitoring can be enabled or disabled using link **J1**. Monitoring requires a 10kΩ EOL Resistor. The monitored relay output may be spurred 2-way (2 x 22 kΩ EOL) or 3-way (3 x 33 kΩ EOL). The Relay (when monitored) will not activate if the EOL value is <5 kΩ.

When the relay is activated the associated red LED flashes at a rate of 1 second ON/OFF.

The relay has the Loop Module address of the Loop Responder base address plus 8 in modes 0, 1, 3, 6, 7; or base address plus 4 in modes 2, 4 and 8.

2.7 Addressing

Select the base address (01 to 91 or 95) using the two Loop Address switches labeled **ADDRESS** located at the bottom right of the PCB. Refer to Figure 2.1.

The **Loop Responder** uses 5 (modes 2 and 4) or 9 Module Loop Addresses:

- The first or Base Address is for Circuit 1.
- The second address is for Circuit 2, this is 'Base Address + 1.'
- The third and subsequent addresses for Circuit 3 to Circuit 8 are 'Base Address + 2' to 'Base Address + 7'.
- The 5th (modes 2 and 4) or 9th address (Base Address + 8) is assigned to the output relay.

Each loop can have a maximum of 99 modules (addresses 01 to 99), therefore the highest base address a **Loop Responder** can have is 91 or 95 for modes 2 and 4.

For mode configuration see section: 2.1 'Smoke Mode' or 'Switch Mode' Input Selection.

NOTE: The address 00 is reserved exclusively for "Factory Test Mode". If a unit has inadvertently set to this mode the Green Poll LED will flash continuously.

To turn off "Factory Test Mode", proceed as follows:

- Remove the power to the Loop Responder.
- Set the address switches to the desired address (01-91or 95)
- Re-connect power to the Loop Responder.

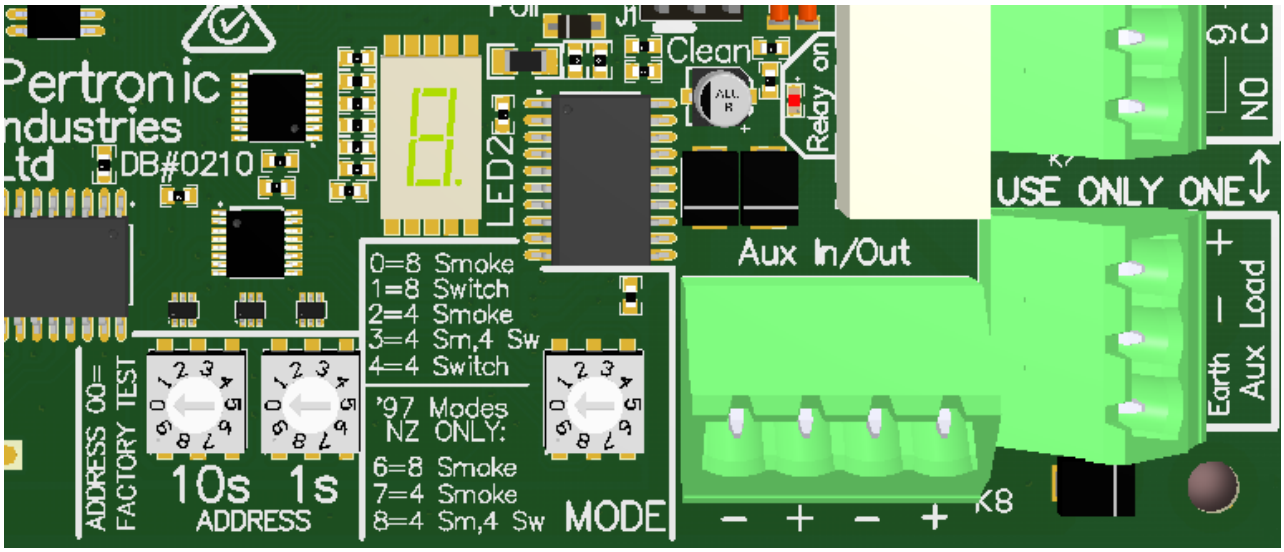

Figure 2-4 Location of Mode and Base Address Selection Switches

2.8 Loop Short Isolation

The **Loop Responder** has an integrated isolator.

If the loop on either side of the responder is short-circuited, the responder will isolate that side of the loop so that full functionality is maintained.

Single open-circuits on the loop do not affect the operation of the responder.

A faulty circuit on the Loop Responder does not prevent other circuits operating normally.

If the isolator of a “**Loop Responder** configured in ‘Conventional Detector’ circuit mode” operates, the **Loop Responder** reports an ‘ISOLATOR operated’ message to the panel.

If the **Loop Responder** is in ‘Switch mode’, a fault message is reported on the panel.

The ‘Isolator Operated’ message is reported through the base address circuit of the board. Because the loop was isolated due to a short, the panel also raises a Loop Break event.

2.9 7-segment display

The on board 7-segment display is used to provide status information for off-normal events. The reporting is in the format of 2 consecutive characters: a number denoting the circuit and a letter showing the status.

To limit power consumption, the display is kept blank—except for the decimal point—during normal operation. The decimal point flashes briefly (200 ms) every two seconds to verify activity. If a problem occurs, the decimal point flashes more frequently at 200 ms On/Off.

To start the status display, briefly press (for less than 2 sec) and release the small button near the middle of the PCB, shown in **Figure 2-5 Seven Segment Display Location** below.

The status display sequence is 400ms for the first character, 200ms blank, 400ms for the second character, and is followed by 7 seconds blank then repeated. If more than one problem exists, the display cycles through them in this order: first the alarms, then the circuit faults and lastly the system problems. The status display function automatically switches off after 2 minutes or if the button is pressed again.

Numbers **1** through **8** denote specific circuits; a **0** represents the responder as a whole and its relay. Letters denote the nature of the off-normal event. The meanings for **A**, **F, P, L, I,** and **r** are shown in Table 2-2 Seven segment display information below.

First char	Second char	Meaning
1 .. 8	A	Circuit in alarm
1 .. 8	F	Circuit in fault
0	P	20V power
9	L	Power on the monitored 100v relay
0	I	Loop isolated
9	r	Relay monitor fault

Table 2-2 Seven segment display information

For example, if a voltage were applied inadvertently to the relay contacts of the 100v LineIn/LineOut connector, the seven segment display would show a ‘9’ followed by ‘r’ and ‘L’, indicating a relay monitor fault as there is power on the monitored 100v relay. The panel will indicate a ‘Supply Error’.

To verify the correct firmware type, press and hold the button down for longer than 2 seconds, after two seconds the display should show **A** then **U** while the button is being held down (400ms for the first character, 200ms blank, 400ms for the second character, and is followed by 7 seconds blank, then repeated). Releasing the button should leave the display blank.

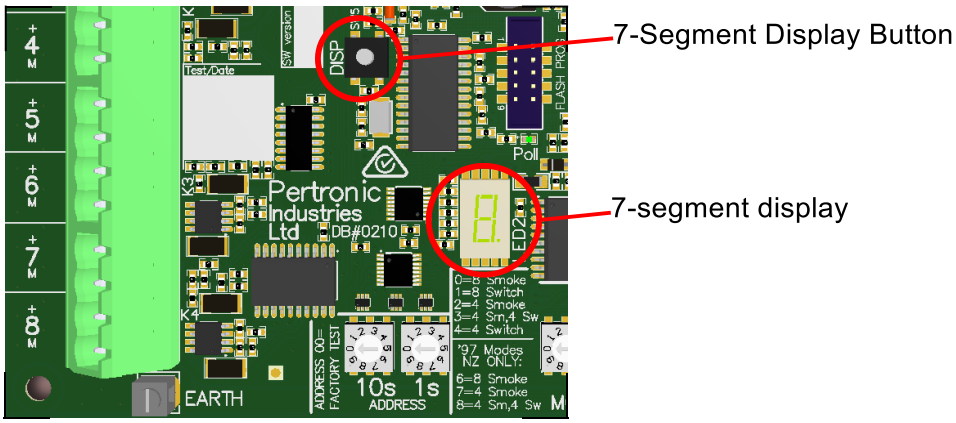

Figure 2-5 Seven Segment Display Location

2.10 Changing the "Circuit" voltage

There are some older detector types (Hochiki) that may require a higher circuit voltage than the default 20 Volts that is used for all devices shown in Table 3-1: Detector Limitations on the Conventional Circuit.

To ensure that these devices operate correctly the circuit voltage can be increased to 23 Volts by cutting the jumper link as shown in the figure below.

Unless 23V operation is specifically required, use the default 20V setting to ensure correct operation of the connected devices. To set for 23V operation cut the circuit Voltage option Link.

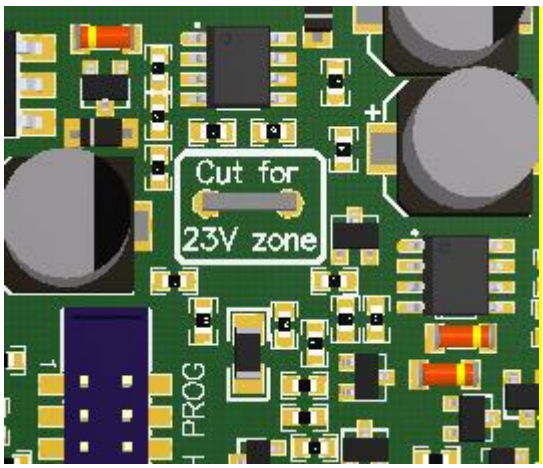

Figure 2-6: Circuit Voltage Option Link

2.11 'Smoke Mode' Circuit Datum Levels

Table 2-3 'Smoke Mode' Circuit State (20.0Vdc supply) shows the 'M' point voltage thresholds on a conventional detector circuit.
The values are measured at the 'M' terminal of each circuit, with respect to circuit negative.

NOTE: Do not measure across the circuit, from circuit positive to M. The result is NOT a valid reading.

The datum is the steady state of I_M current.

Circuit State	V_M (V)	I_M (mA)	Comments
Low Fault	$V_M < 1V$		If the datum falls to these values, a Low Fault will be raised.
Normal	1.5V	1.8mA	With a 10kΩ EOL resistor only.
	$1.5V < V_M < 4.5V$	$1.8 < I_M < 5.5mA$	Datum current ranges from 1.8 to 9.3mA are considered 'Normal'
EOL Resistor Lost	V_M – 0.7V	I_M >0.85mA	If the datum drops more than 0.7V within 1 second, a Low fault will be raised. This may be activated by an open-circuit or loss of End-of-Line Resistor (10kΩ)
High Fault	$4.5V < V_M < 8.0V$		If the datum rises to these values, a High Fault will be raised.
Detector Smoke Alarm	$8V < V_M <$ Vref -1.5V	$11 < I_M < 22.5mA$	Approximate response time is 6 seconds.
MCP Activated	Vref -1.5V < V_M	$24.8 < I_M$ [$3.6mA < I_M$]	A Short-Circuit has been detected. [Power Save mode]

Table 2-3 'Smoke Mode' Circuit State (20.0Vdc supply)

NOTES:

1) The minimum voltage change for a 'Fault' is ±0.5V in 0.8 seconds.
2) Vref is the Circuit Loop voltage, nominally 20.0Vdc, but it may vary.

The regions for the M-value voltages and the transitions required from the datum for various Fault and Alarm situations are in Figure 2-7 Smoke Mode Circuit 'M-Level' Datum Voltage: Alarm and Fault Trip Levels(20v) and Figure 2-8 Smoke Mode Circuit 'M-Level' Datum Voltage: Alarm and Fault Trip Levels (23v)

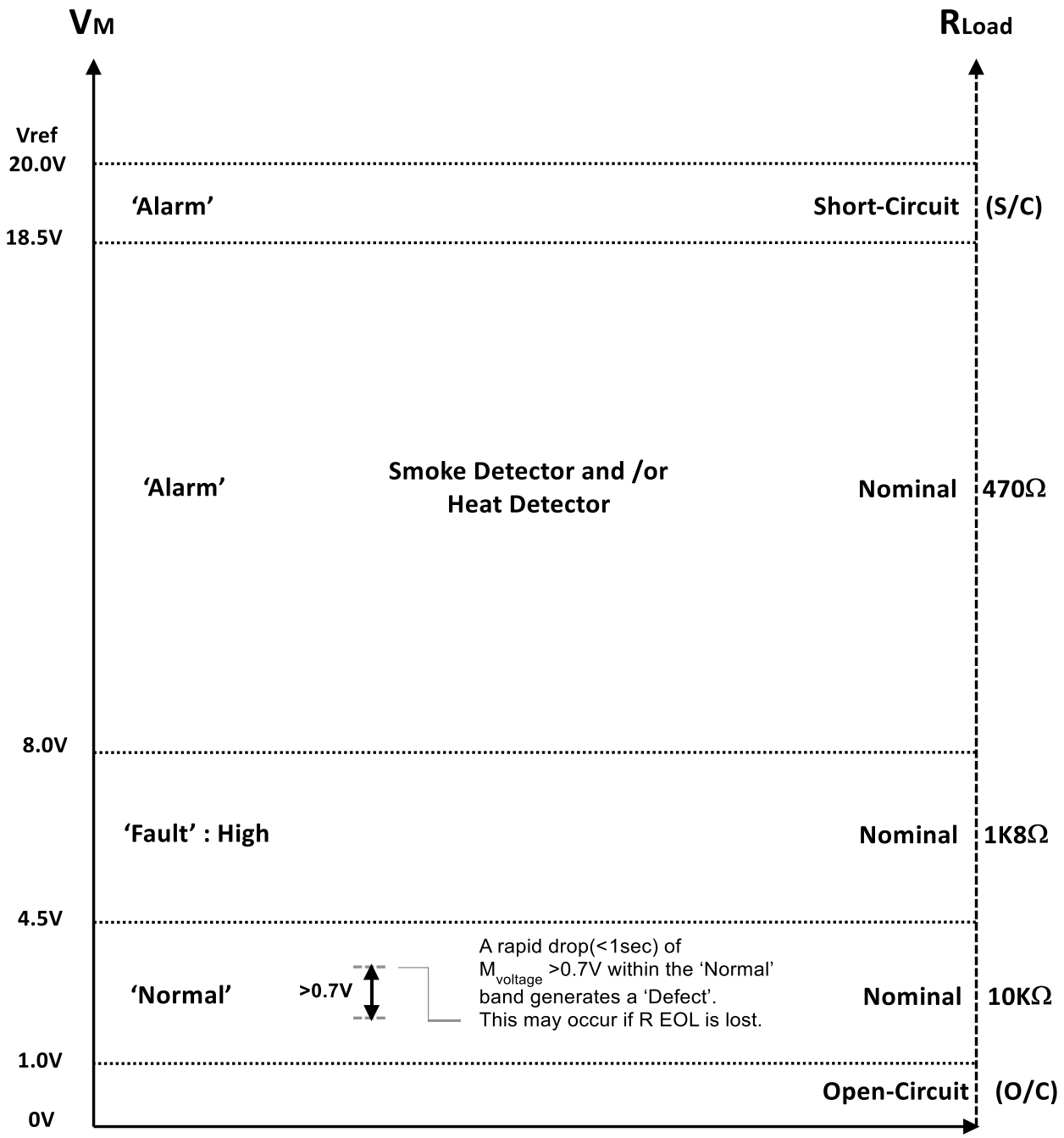

Figure 2-7 Smoke Mode Circuit 'M-Level' Datum Voltage: Alarm and Fault Trip Levels (20v)

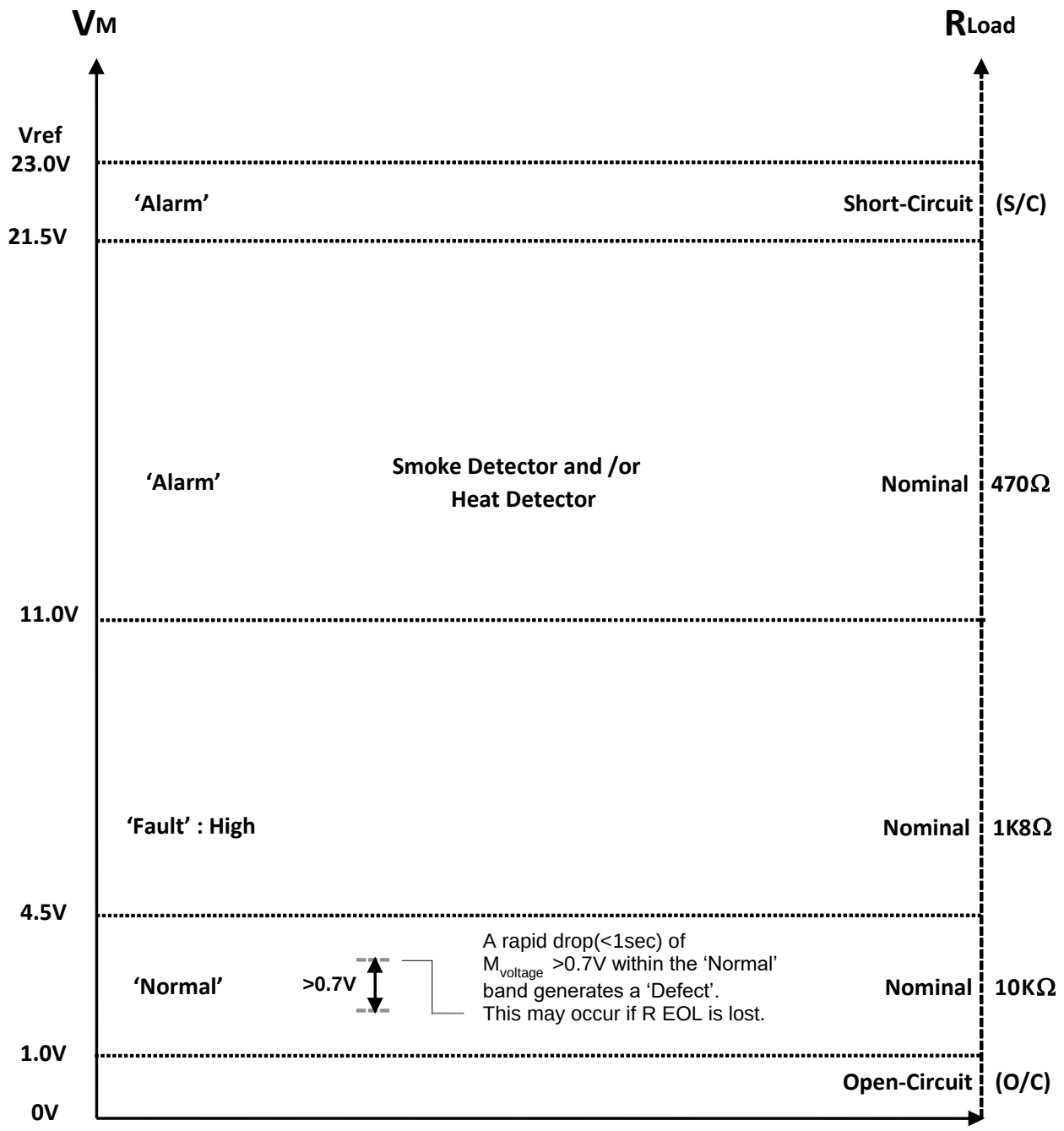

Figure 2-8 Smoke Mode Circuit 'M-Level' Datum Voltage: Alarm and Fault Trip Levels (23Volts)

2.12 'Switch Mode' Circuit Datum Levels

Table 2-4 Loop Responder 'Switch Mode' Circuit Levels (20.0Vdc supply)

shows the voltage levels and Circuit Load (R_L) values for switch input: 'Normal', 'Fault' and 'Alarm' state.

Circuit State	V_M (V)	Circuit Resistance	Comments
Short-circuit (SC) Alarm (MCP)	$V_M > 12.5V$	$R_L < 500\Omega$	Nominal: $R_L = 100\Omega$
Short-circuit (SC) Fault	$1.82V < V_M < 12.5V$	$500\Omega < R_L < 8k\Omega$	Nominal: $R_L = 6k8\Omega$
Normal	$1.24V < V_M < 1.82V$	$8k\Omega < R_L < 12k\Omega$	Nominal: $R_{EOL} = 10k\Omega$
Open-circuit (OC) Fault	$V_M < 1.24V$	$12k\Omega < R_L$	

Table 2-4 Loop Responder 'Switch Mode' Circuit Levels (20.0Vdc supply)

Figure 2-9 Switch Mode Circuit M point voltage and Circuit Load (20 Volts)

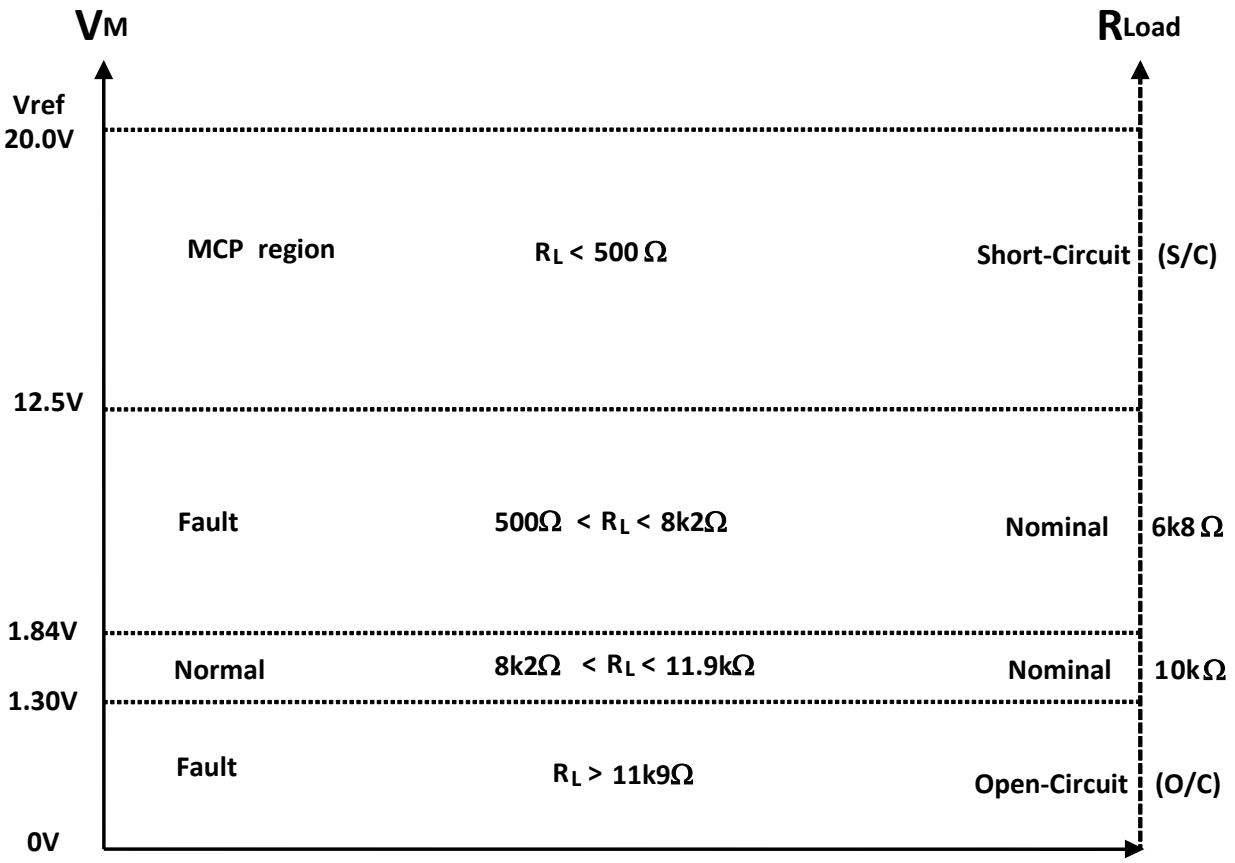

Figure 2-9 Switch Mode Circuit M point voltage and Circuit Load (20 Volts)

Figure 2-10 Switch Mode Circuit M point voltage and Circuit Load (23 Volts) depicts the regions for the M-value voltages and equivalent circuit resistance values.

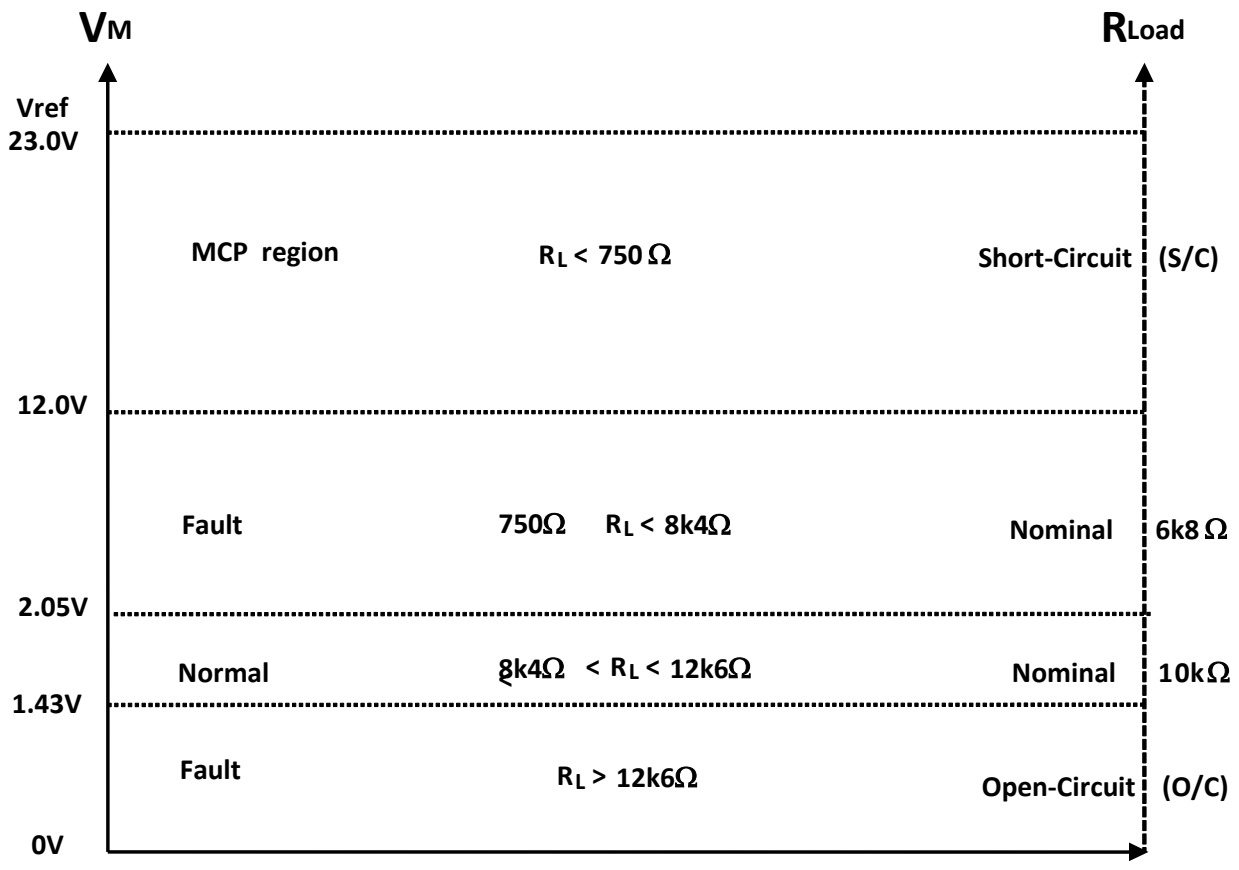

Figure 2-10 Switch Mode Circuit M point voltage and Circuit Load (23 Volts)

2.13 Loop Responder Fault Notification

Loop Responder Faults are reported on the F100A, F120A and F220 panels as shown in **Table 2-5: Loop Responder Fault Notifications**

Condition		Faults Reported to Panel	F100A Display	F120A Display	F220 Display
‘Smoke Mode’ circuit faults	Datum High Too many detectors (more than 40 detectors)	Datum voltage ‘High Fault’ associated with the address of that circuit	HI	High Fault	High Fault
	Datum Low Open Circuit	Datum voltage ‘Low Fault’ associated with the address of that circuit	LO	Low Fault	Low Fault
	Open Circuit Caused by rapid >0.7V drop on the M point	‘Low Fault’ associated with the address of that circuit	LO	Low Fault	Low Fault
	EOL Resistor missing	Low Fault will be reported at power up, reset from panel, or after 24hr test, associated with the address of that circuit	LO	Low Fault	LowFault
	External Power Mode: Power Lost	‘PSU Fault’ reported through all 8 circuits of that board	PSU	Supply Fault	Supply Error
	Vref (20V) Circuit Voltage Failure	‘PSU Fault’ reported through all 8 circuits of that board	PSU	Supply Fault	Supply Error
	Loop Short	‘Isolator Fault’ reported through first circuit of that board	Device ISO and Loop Break	Device Isolator Fault and Loop Break	Device ISO Active
‘Switch Mode’ circuit faults	Circuit M point in fault band (Refer Table 2-4 Loop Responder ‘Switch Mode’ Circuit Levels (20.0Vdc supply)	‘Fault’ associated with the address of that circuit.	FLT	FAULT	Generic Fault
	External Power Mode: Power Lost or too low	‘Fault’ reported through all 8 circuits of that board	FLT	FAULT	Generic Fault
	Vref (20V) Circuit Voltage Failure	‘Fault’ reported through all 8 circuits of that board	FLT	FAULT	Generic Fault
	Loop Short	‘Fault‘ reported through first circuit of that board	Device FLT and Loop Break	Device FAULT and Loop Break	Device ISO Active

Table 2-5: Loop Responder Fault Notifications

2.14 Rebooting a Loop Responder

To invoke a restart (or reboot) of the Loop Responder board briefly change, and then re-instate either the loop address or configuration setting or unplug/re-plug the analogue loop.

3. DETECTOR COMPATIBILITY

3.1 Circuit Operation

Manual call-points, which are normally open and short-circuit for the alarm condition, will give a Fire signal within 1 second of device operation.

Devices which increase the current in the detector circuit, such as smoke or heat detectors, have a 4 second gated operation to eliminate false alarms from transient conditions. Note that these detectors typically clamp at 5–7 volts in the operated condition and this voltage level is recognized as detector activation. An open-circuit gives a fault signal.

3.2 'Smoke Mode' Circuit and AVF

3.2.1 AVF within Loop Responders

Loop Responders automatically perform an internal AVF (alarm verification) on smoke detectors to minimise false alarms.

When a detector signals an activation, the Loop Responder resets the detector, and only if the detector signals a second activation within 100 seconds will the Responder process it as a genuine alarm condition and notify the panel.

The sequence and timing of this procedure is described here:

1. A smoke detector on a circuit (zone) signals a smoke condition.
2. The responder waits 200ms, resets the circuit for 800ms, ensuring all detectors on the circuit discharge.
3. The circuit is then ignored for 13 seconds to ensure the detectors are in a stable condition.
4. The responder 'arms' this circuit for 100 seconds.
   (a) If any detector on the 'armed' circuit signals a smoke condition within the 100 second period, the circuit (zone) is latched in the 'Alarm' state, and the alarm is reported to the panel.
   (b) If no detectors on the 'armed' circuit signal a smoke condition within the 100 second period, the circuit reverts to the 'Normal' state.
5. A subsequent detector activation within 120 seconds of resetting a previous alarm condition results in the panel reporting an alarm without delay.

The time from the first activation, through the second activation and report of smoke alarm to the panel, and until the panel reports an 'Alarm,' is about 16 seconds.

The alarm state can only be cleared by a Reset command from the panel, unless it is set for non-latching.

3.2.2 AVF in Analogue Panels with Loop Responders

In addition to the responder's internal AVF procedure, a panel (**F100A**, **F120A** or **F220**) can be instructed to perform AVF on any of its device addresses, including Loop Responder circuits.

The process that occurs between panel and Loop Responder is shown here:

1. When the panel receives the first alarm message from a Loop Responder, it sends a Reset command to the Loop Responder circuit that is, after the Loop Responder has performed its internal AVF procedure, as described in Section 3.2.1 AVF within Loop Responders.
2. The panel then marks this circuit in 'AVF-Armed' state and reports an 'AVF Stage 1' message. The period of the 'AVF-Armed' state is 120 seconds.

3. The panel instructs the Loop Responder to Reset the activated circuit. The reset of a Loop Responder circuit consists of 4 steps:
    a) Reset the detector
    b) Wait 3 seconds to allow the circuit to achieve 'Normal' level
    c) Perform an End of Line (EOL) test
    d) Establish the datum level.

    After receiving a reset command from panel, the responder will disable the internal AVF facility for 180 seconds; any subsequent alarm will be immediately reported to the panel.
4. If the panel receives a second alarm message for that circuit within the Panel 'AVF-Armed' period, it is processed as a genuine alarm.

The typical time from a detector's first activation until the panel reports an alarm is about 25 to 35 seconds. This time period includes a detector's first activation, a second detector activation (Loop Responder's internal AVF), the Loop Responder reset, a third detector's activation, until the panel reports an alarm.

For details on AVF operation and timing see section 3.2.3 AVF Timing Diagrams.

3.2.3 AVF Timing Diagrams

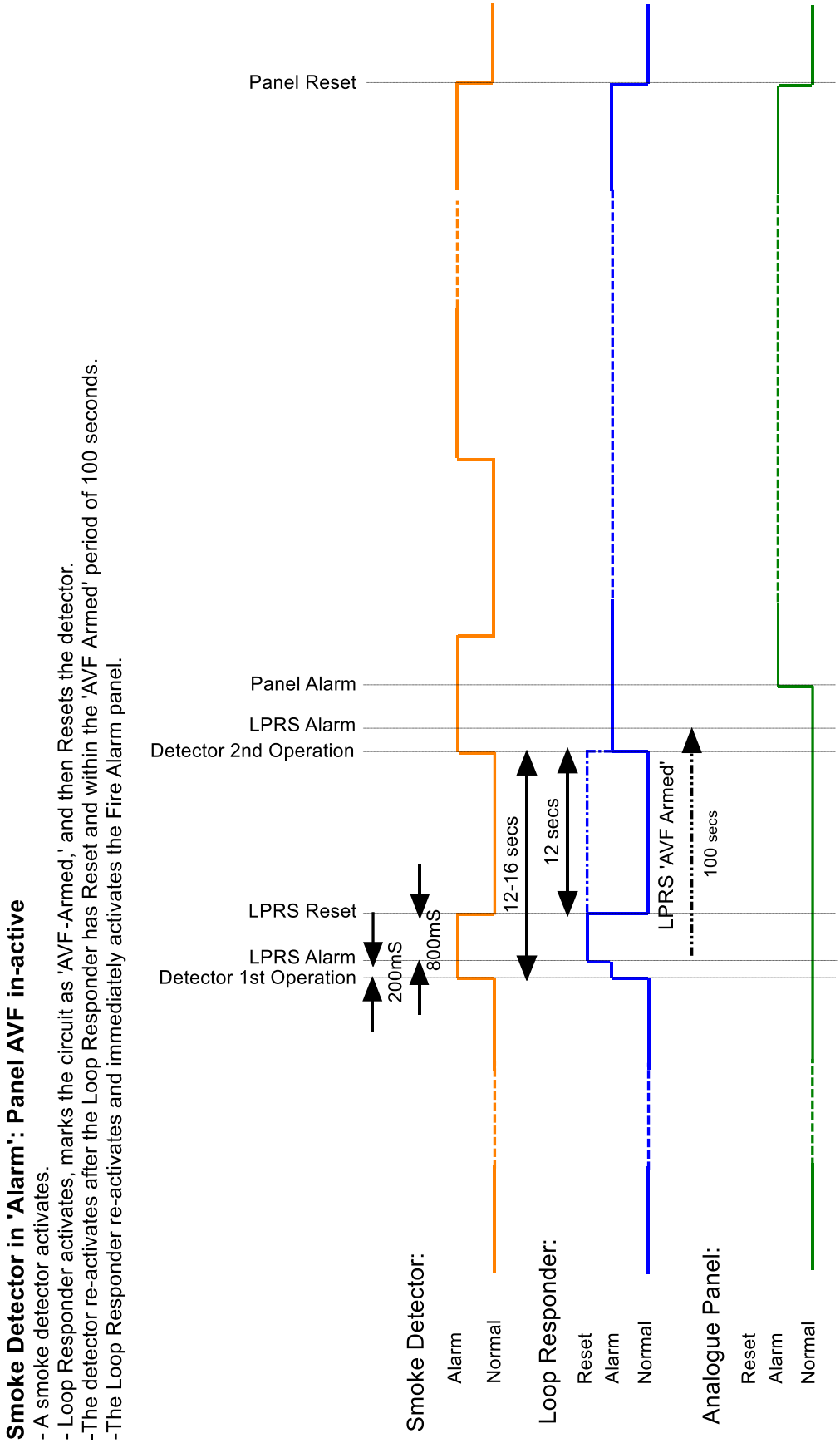

Figure 3-1: AVF Timing Diagram: Smoke Detector in 'Alarm': Panel AVF In-Active

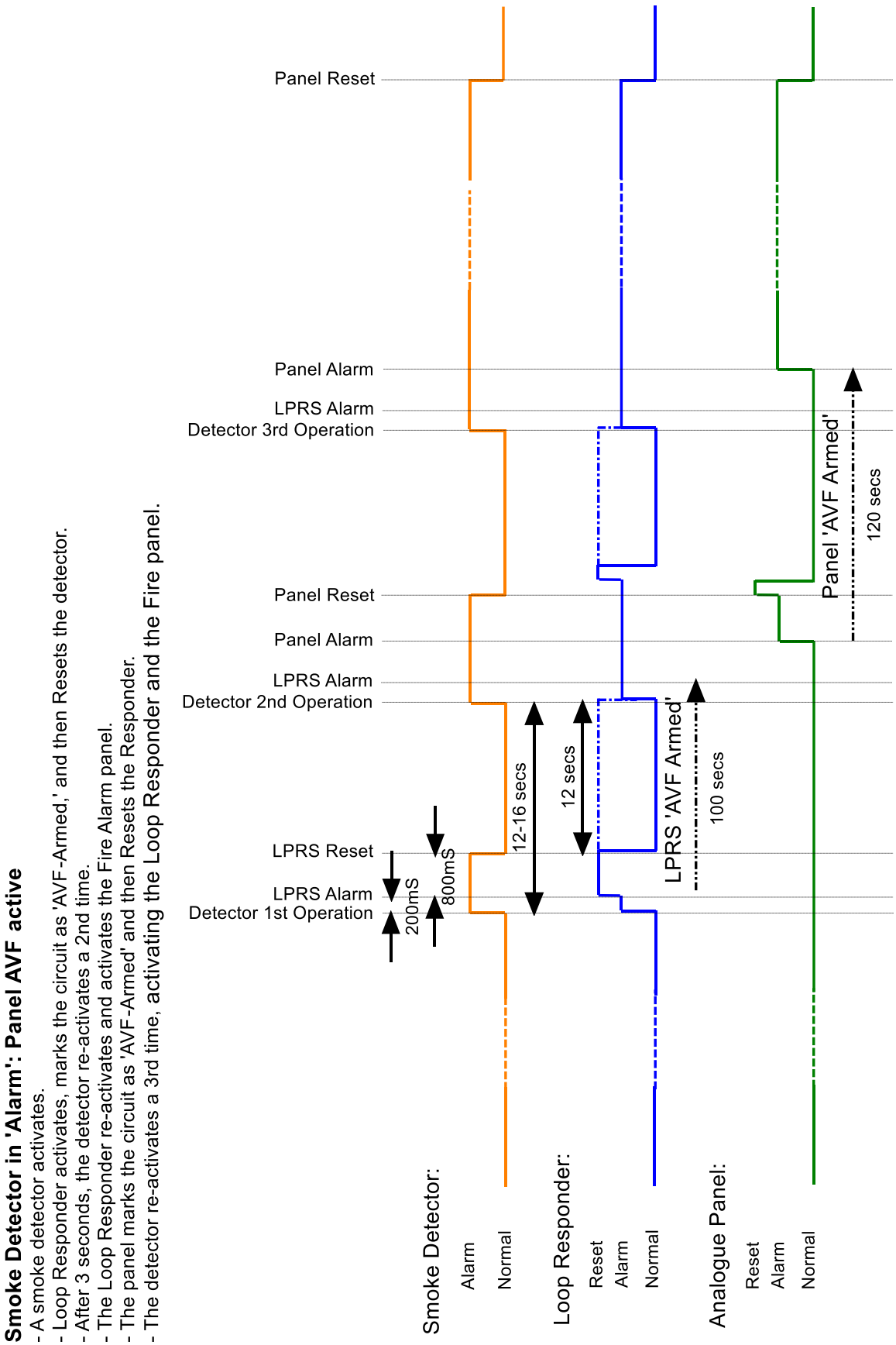

Figure 3-2: AVF Timing Diagram: Smoke Detector in ‘Alarm’: Panel AVF Active

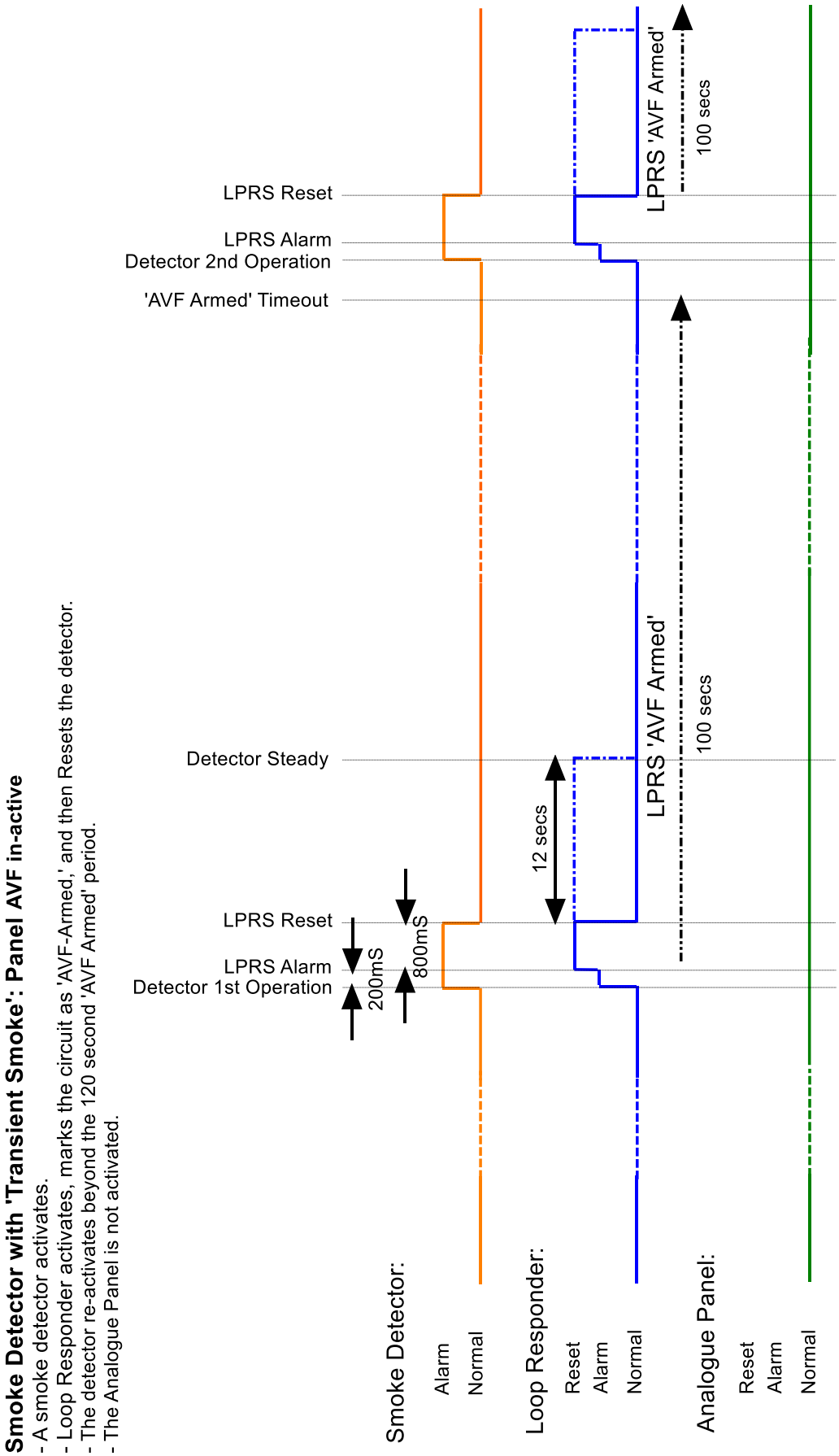

Figure 3-3: AVF Timing Diagram: Smoke Detector with ‘Transient Smoke’: Panel AVF In-Active

3.3 Detector Limitations

System Sensor Detectors draw a small monitoring current that limits the number of these devices that can be connected to a circuit.

Manual Call-points draw no current when inactive and so there is no limit to the number of these devices that can be connected to a circuit.

Devices will draw a higher current when activated.

The maximum detector load depends on the magnitude of the standing current of the detectors and the stability of this standing current—this is limited to 4.8mA per circuit.

Device loadings for the Loop Responder are shown below:

Detector Description	Maximum Quantity
Manual Call-Point (MCP) KAC WR 2001SR	Unlimited
System Sensor Model 1400 Ionisation or 2400 Photoelectric Smoke Detectors	40 per circuit
System Sensor Model 1100 Ionisation or 2100 Photo-electronic Low Profile Direct-Wire Smoke Detectors	40 per circuit
System Sensor Model 1151 Ionisation or 2151 Photoelectric Low Profile Smoke Detectors	40 per circuit
System Sensor Model 2351E Photo-electronic Smoke Detectors	40 per circuit
System Sensor Model 2351TEM Photo-electronic / Thermal Multi-criteria Detectors	40 per circuit
System Sensor Model 4351E High Temperature Thermal Detectors	40 per circuit
System Sensor Model 51x51 Series Rate of Rise and Fixed Temperature Thermal Detectors.	40 per circuit
System Sensor Model 5351E Rate of Rise and Fixed Temperature Thermal Detectors.	40 per circuit
The Maximum Total Device Load Allowed on Each Circuit is 4.8mA	
NOTE: These detector limits apply to Loop Responders having v5.00A or greater firmware.	

Table 3-1: Detector Limitations on the Conventional Circuit

4. LOOP RESPONDER INSTALLATION DIAGRAMS

4.1 Loop Responder PCB Layout

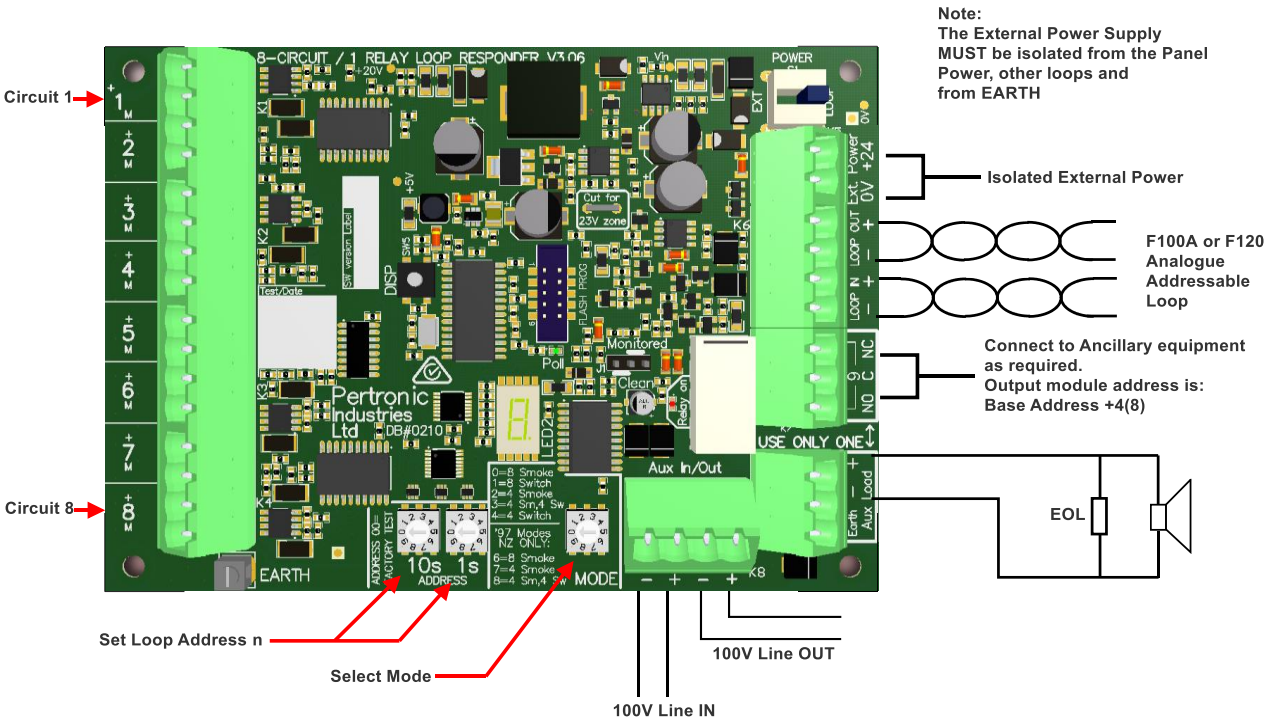

Figure 4-1 Loop Responder PCB Layout - shows the location of key components

4.2 Externally Powered Connection Diagram:

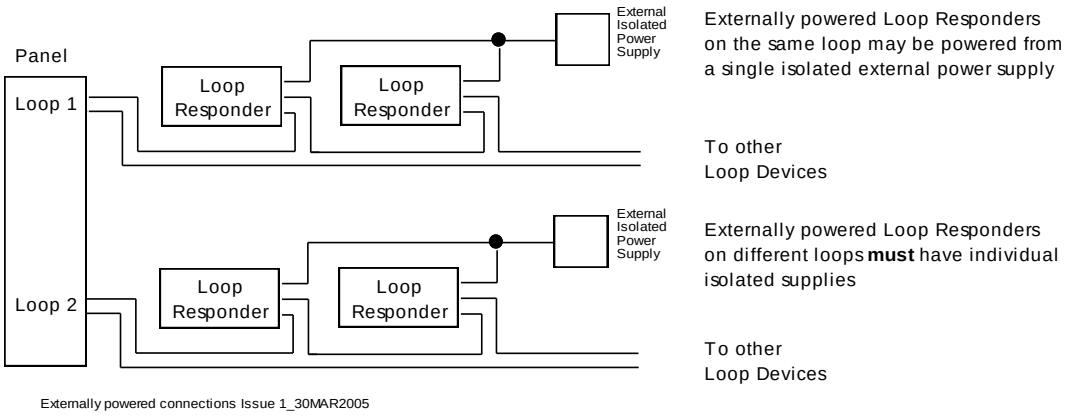

Figure 4-2 Externally Powered Connection Diagram

4.3 'Smoke Mode' Circuit – typical connections

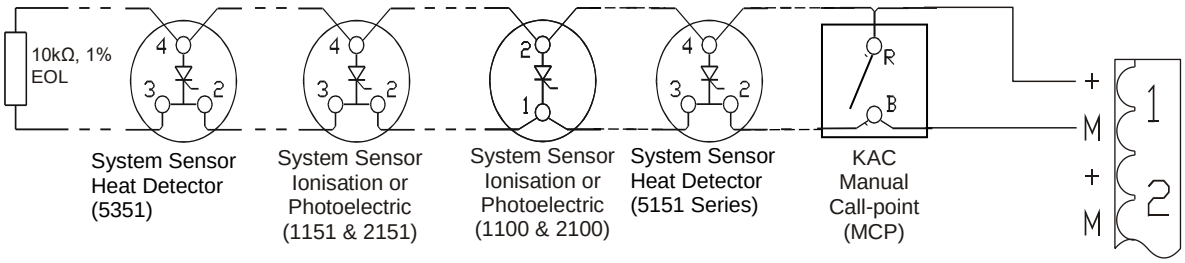

Figure 4-3 Conventional Detector Circuit

Typical connections showing conventional Smoke Detectors, Heat Detector and Call-point

4.4 'Switch Mode' Circuit – typical connections

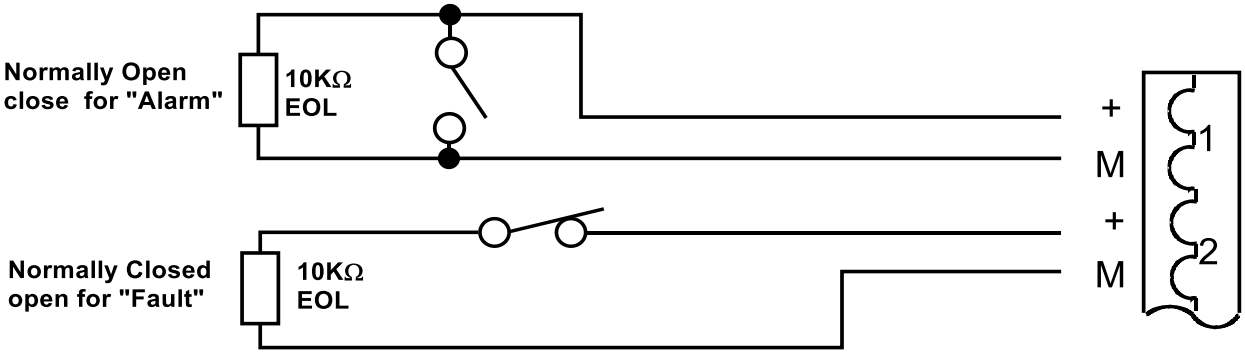

Figure 4-4 Switch Input Circuit

4.5 Monitored Speaker Switch

Place J1 in the monitored position, over the two right pins.

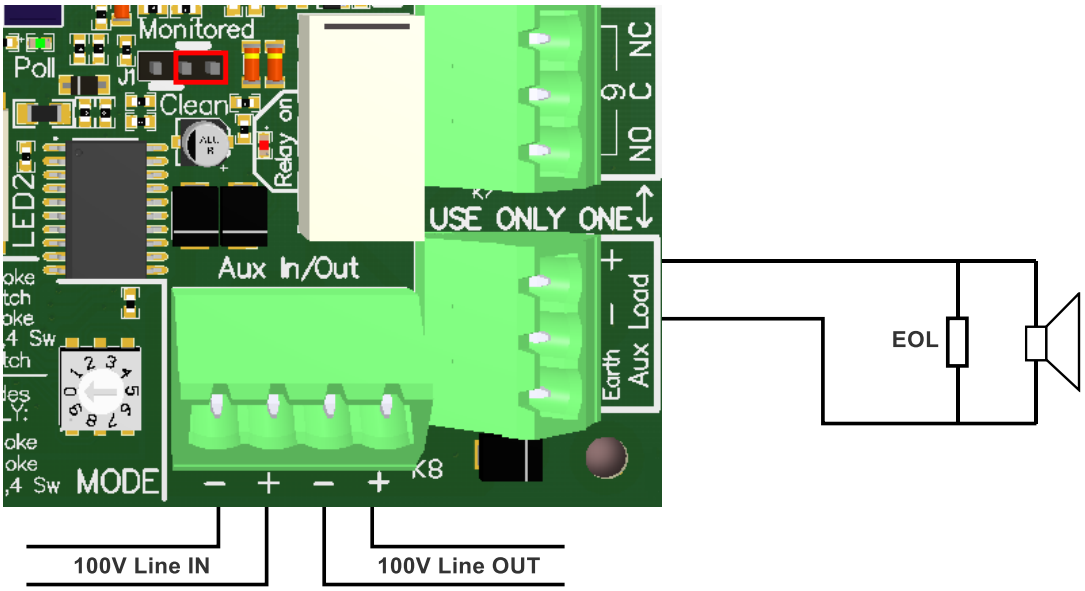

Figure 4-5: Monitored Speaker Switch

5. PRODUCT CODES

Description	Product Code
AA Loop Responder, 8 I/P, Multifunction+ Rly O/P, (Aus)	AALR-MFA
F100A Loop Responder Case	F100LRC

Table 5-1: Product Codes

Document Change History

Issue Number	Date	Reason for Update	Description of Changes	Author
Issue 1:	Nov 2013	Initial release of upgraded device: Surface mount responder with enhanced functionality.	Selectable modes (responders, switches or combinations); selectable relay function with optional monitoring; 7-segment for diagnostics. 23 Volt circuit option.	AvV RDB
Issue 11	28/11/2017	Update to match new hardware/firmware release	See CN2352	JPF
Issue 12	11.11.20	Multiple changes/updates	CN2876	RJK