PERTRONIC
SPIB PRINTER INTERFACE
TECHNICAL MANUAL

Valid For:

SPIB Printer Firmware	V1.00
SPIB Hardware	V1.50
Panel F220	V4.00 and later
Panel F120A, status only	V1.04.02, V1.32.05
Panel F120A, status plus isolate functionality	V4.24
Panel F120A, full functionality	V5.00

ISSUE 2.2

Serial Number:

Date of Manufacture: … / … / …

The content of this manual is copyright.

This document is to be used only for operating or maintaining Pertronic Fire Alarm systems.

This document is not to be reproduced, photocopied or passed in part or whole to a third party without the express, written authorisation of

Pertronic Industries

CONTENTS

1.	Introduction		1
	1.1	Overview	1
	1.2	Description	1
	1.3	Overview of Features	1
	1.4	Interface Connections	2
2.	Technical description		3
	2.1	LED indicators	3
3.	Configuration Interface		4
	3.1	View Stored Options	4
	3.2	General Configuration Options	5
	3.3	Panel Communications Setup	6
	3.4	Configure Serial Output	6
	3.5	Save Configuration Data to Flash	7
	3.6	Revert to Saved Configuration	7
	3.7	Restore Default Configuration	7
	3.8	Export Configuration	7
	3.9	Import Configuration	7
4.	Message Template Format		10
	4.1	Timestamp Format	12
	4.2	Point ID Values	14
	4.3	Device Type Values	15
	4.4	Status Values	16
	4.5	Event Class Values	17
	4.6	Embedded Delays	17
5.	Installation		18
6.	Ordering Information		18
PERTRONIC SALES AND TECHNICAL SUPPORT			19

FIGURES

Figure 1-1 SPIB Printer Connection Diagram 1

Figure 1-2 SPIB hardware block diagram 2

Figure 2-1: Detail View of SPIB LEDs 3

TABLES

Table 1-1: SPIB Interfaces 2

Table 2-1: LED Functions 3

Table 3-1: Configuration Parameters 8

Table 4-1: Message Template Escape Sequences 10

Table 4-2: Format Modification Flags 11

Table 4-3: Format Modifier Examples 11

Table 4-4: Timestamp Formatting Codes 12

Table 4-5: Point ID list 14

Table 4-6: Standard device types 15

Table 4-7: Status Bit Values 16

Table 4-8: Event Class list 17

1. INTRODUCTION

1.1 Overview

The Pertronic Printer Interface is a firmware variant of the Pertronic Industries Special Purpose Interface Board (SPIB), it translates the events occurring on a Pertronic fire alarm system into human or machine-readable text for direct pager/printer output, and/or for parsing into data useful for 3rd party monitoring systems.

1.2 Description

The interface monitors the fire alarm control panel's RS485 Mimic Bus (HS485 and legacy bus on F220, legacy bus on F100A and F120A) and examines the raw binary event data transmitted from the panel. It watches for selected event types for translation into textual information and outputting to the monitoring system. Basically, any event that appears on the panel's LCD display can be captured.

The format of the SPIB's output is highly customisable, allowing for simple decoding of events at a 3rd party system, or for a detailed text output for human consumption. Both RS232 and RS485 transmission is supported at a wide range of speeds.

To avoid ground-loop problems, the Pertronic RS485 Mimic Bus interface (SPIB board connectors K3, K6 and K7) is galvanically isolated from the other interfaces on the SPIB.

1.3 Overview of Features

- Decodes Pertronic F100A, F120A & F220 panel events.
- External connection configurable RS232 or RS485, 300-230400bps
- Extremely flexible layout of event information to external systems
- Provides all data accessible via the fire alarm control panel's LCD display
- Optional fault monitoring between Printer Interface and fire control panel
- Powered from the Pertronic mimic bus
- Configurable with a PC running a terminal emulation program via the USB port
- Galvanically isolated from the fire alarm control panel's RS485 Mimic Bus. (This prevents connected equipment causing ground fault indications on the alarm panel.)
- On-board LEDs provide diagnostic information

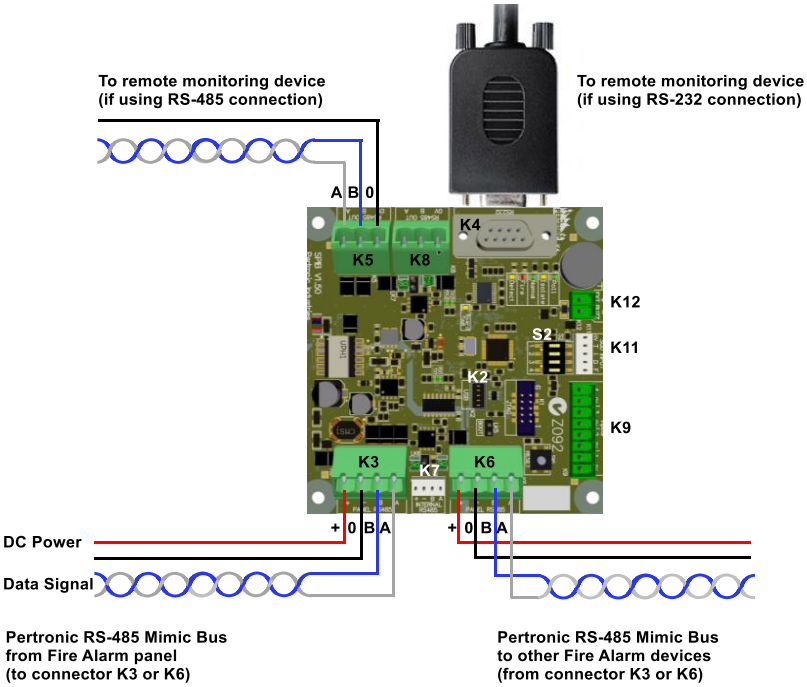

Figure 1-1 SPIB Printer Connection Diagram

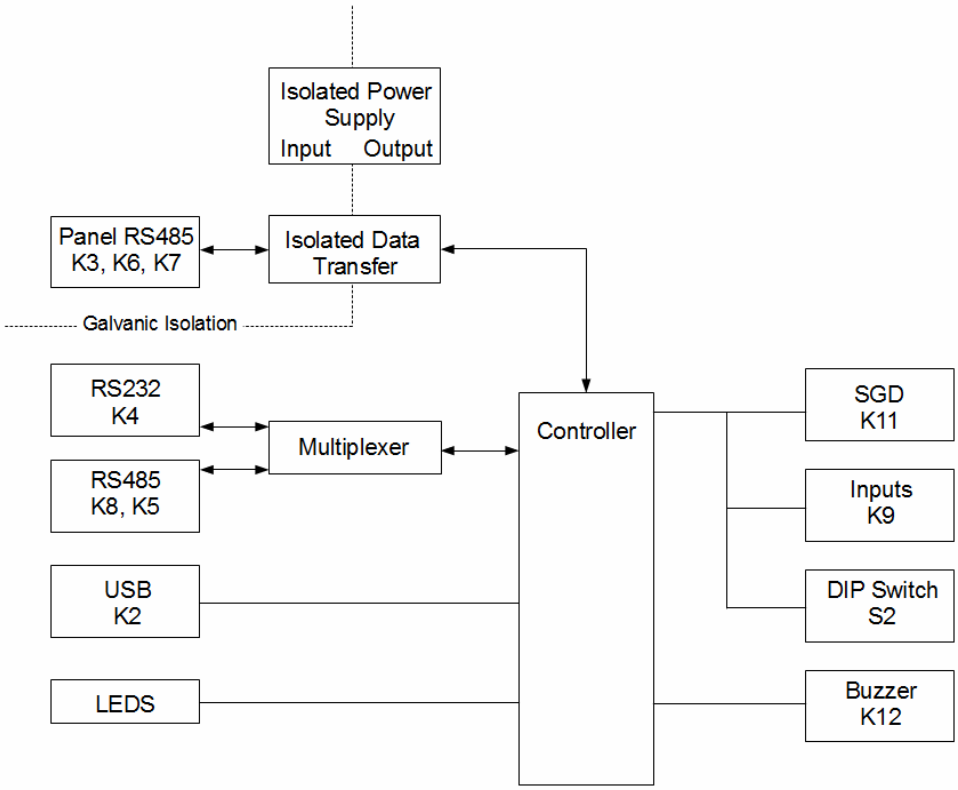

Figure 1-2 SPIB hardware block diagram

1.4 Interface Connections

The SPIB provides two serial interfaces, one is an isolated RS485 interface for panel connection via the Pertronic mimic bus and the other is for remote device connection and is selectable between an RS232 or an RS485 interface. Not all of the SPIB interfaces are used in this application.

Table 1-1: SPIB Interfaces

Interface	Connector	Description
Panel RS485	K3, K6, K7	Alarm panel connection via the Pertronic mimic bus. Galvanically isolated from the other SPIB ports. The SPIB is also powered from this interface in normal operation.
RS232	K4	Monitoring device connection. Either this port or the adjacent RS485 port can be configured for remote connection.
RS485	K5, K8	Monitoring device connection. Either this port or the adjacent RS232 port can be configured for remote connection.
USB	K2	USB2 device port with a mini B socket, used to configure the SPIB. The SPIB can be powered from this USB port during configuration, no RS485 power is required.

The SPIB is powered from the “Panel RS485” connectors (any one of K3, K6 or K7). Power to the remainder of the board is provided by a galvanically-isolated DC-DC converter, the RS485 data communications from the panel are also galvanically isolated. This isolation prevents external devices connected to the SPIB hardware causing earth fault issues on the connected panel. The Panel RS485 isolation barrier is rated as “Functional Insulation”.

2. TECHNICAL DESCRIPTION

2.1 LED indicators

The LEDs on the SPIB are used as a visual check on both SPIB and the connected panel's operation.

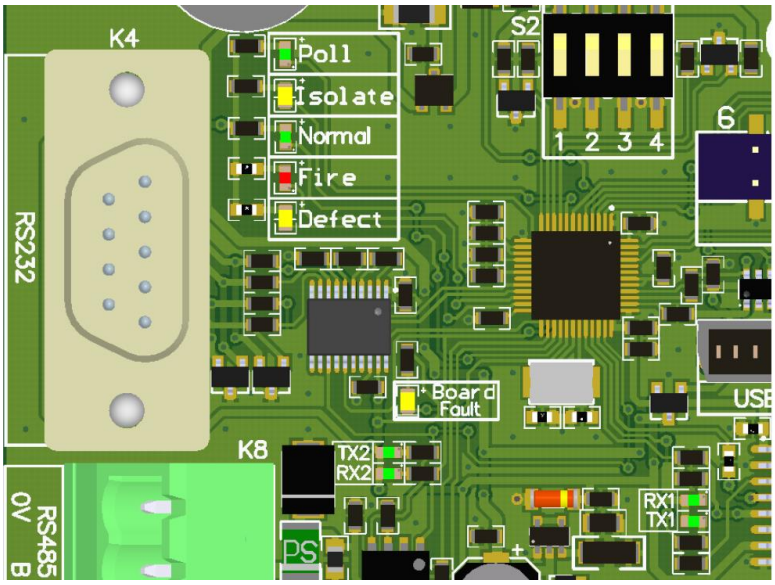

Figure 2-1: Detail View of SPIB LEDs

The LED functions are as follows:

Table 2-1: LED Functions

LED Name	Description
Poll	Blinks whenever the connected panel communicates with the SPIB.
Isolate	Steady ON if any device/object in the connected panel is Isolated (Disabled).
Normal	Slowly blinks if the connected panel's status is Normal.
Fire	Steady ON if any device in the panel is in the Alarm state.
Defect	Steady ON if any device in the panel is in the Defect (Fault) state.
Board Fault	Blinks rapidly if there is any locally-generated fault condition on the SPIB. A typical example would be if the connection to the panel is lost.
TX1 RX1	Blinks when any data is received from, or sent to, the connected panel. Note that these indicate just whether the state of the RS485 data line is changing, not whether the data is intelligible.
TX2 RX2	Blinks when any data is received from, or sent to, the remote monitoring device. Note that these indicate just whether the state of the RS232 or RS485 data line (depending on which one is enabled) is changing, not whether the data is intelligible.

3. CONFIGURATION INTERFACE

The unit can be completely configured via the built-in terminal interface. A PC running a simple terminal emulation program (e.g. HyperTerminal, TeraTerm , PuTTY) can be used to communicate with the SPIB's serial emulation port using a standard USB mini-B cable.

The SPIB implements a Communications Device Class (CDC) slave device via its USB port. For Windows systems, the device uses the standard Microsoft USB to serial driver, but must be associated with the USB ID of the SPIB so that the driver can function. If the version of Windows does not automatically create a virtual COM port, contact Pertronic for a suitable driver information file.

Note that traditional serial line parameters for baud rate, parity, etc. have no effect on the direct USB connection; communication always occurs at the maximum rate possible regardless of the serial settings.

The standard welcome banner generated by the SPIB looks like the following:

```
=====================================================
  P E R T R O N I C   I N D U S T R I E S   L T D
      Special Purpose Interface Board (SPIB)
              SPIB-Printer Interface
         Version x.xx, dd-mmm-yyyy [xxxxx]
=====================================================
Interactive Options:

   V) View stored options
   C) General configuration options
   P) Panel communications
   O) Configure serial output
   S) Save configuration data to Flash
   R) Revert to saved configuration
   D) Restore default configuration
   E) Export configuration
   I) Import configuration
Selection:
```

At this point the SPIB is expecting one of the keys shown to be pressed. The main menu options are discussed in detail below:

3.1 View Stored Options

Pressing V at the prompt sends the current configuration settings (the factory defaults are shown) to the terminal as follows:

```
-------------------------------------------------------
  Stored Options
-------------------------------------------------------

 === General ===
Message template: $t: $m\r\n
Timestamp format: %F %T
Message acknowledge text:
Output throttling (ms): 0
Output heartbeat (ms): 0
Force non-blank descriptors: NO

 === Panel-specific ===
Port speed: 9600
Queue monitor mask: 0xFFFFFFFF
Text timeout (ms): 4000
Mimic Emulation: None
Send restore events: NO
Set restore flag for events: NO

 === Serial Output ===
Use RS485 output: NO
Output Parameters: 19200N81
```

3.2 General Configuration Options

This section covers options controlling how the SPIB creates messages and deals with timing communication with the remote monitoring device.

3.2.1 Message Template

The message template defines what information is presented to the monitoring device when each event occurs. It is a simple free-format text field containing special escape sequences acting as placeholders for information which is computed as the message is generated. See Section 4, Message Template Format below for details.

Note that since certain options are effectively disabled depending on the contents of the template, they may be omitted from further configuration prompts below. For example, if there is no **$t** escape sequence in the template, then the option to edit the timestamp format string will be skipped.

3.2.2 Timestamp Format

This parameter defines the format of the timestamp added to the output message if the **$t** escape sequence appears in the main message template. See Section 4.1, below for details.

3.2.3 Add Event Text

The text added to the message for any new event when the **$a** escape sequence appears in the message template.

3.2.4 Removed Event Text

The text added to the message for any removed event when the **$a** escape sequence appears in the message template.

3.2.5 Output Throttling

Determines the minimum time between messages being output by the SPIB. Used if the monitoring device is unable to handle a large number of messages within a short timeframe.

3.2.6 Output Heartbeat

If set to a non-zero value, this option determines the minimum time between special “heartbeat” messages sent by the SPIB if there is no other panel activity to report.

3.2.7 Message Acknowledge Text

Sets the set of characters required for message acknowledgement. The SPIB will wait for the given text to be sent by the remote system before outputting the next message (or retrying). This field accepts the escape sequences prefixed by a backslash (“\”) from Table 4-1: Message Template Escape Sequences below. If this is blank (the default), no acknowledgement is required.

3.2.8 Acknowledge Period

This parameter determines how long the SPIB will wait for the Acknowledge message before outputting the next message (or retrying).

3.2.9 Max Message Retries

Sets the number of retry attempts the SPIB will make to send each message if the Acknowledge text is not seen within the acknowledgement period. A value of zero means only 1 attempt will be made. After the retry count is reached, the SPIB will drop the current message and skip to the next in the queue.

3.2.10 Force Non-blank Descriptors

This option forces the SPIB to generate a generic text descriptor for the **$m**, **$p** or **$z** escape sequences if the panel returns a blank entry for the descriptor of the corresponding object.

3.3 Panel Communications Setup

This option sets all parameters related to panel communications.

3.3.1 Port Speed

Sets the desired baud rate for the panel's RS485 connection to the SPIB. This can be set to any value between 300 and 230400, but should be left at the default of 9600, otherwise communications may be disrupted.

3.3.2 Queue Monitor Mask

Determines which of the panel's event queues the SPIB will monitor. See Table 3-1: Configuration Parameters below for details on the possible values for this parameter.

3.3.3 Text Timeout

Determines how long the SPIB will wait for text requests to the panel to be fulfilled (for the **$m**, **$p** & **$z** template escapes) whilst generating output messages. This may be set between 0 and 60000ms.

3.3.4 Mimic Emulation Setup

The SPIB can be programmed to emulate a standard mimic panel in order to provide connection monitoring between the panel and the SPIB. Otherwise, the panel has no means of detecting the loss of communications with the SPIB.

The SPIB can be set to None, LED mimic (address 1 to 8), or LCD mimic (address 1 to 32).

3.3.5 Send Restore Events

Sets whether the SPIB will generate messages for restore events as conditions return to normal.

3.3.6 Set Restore Flag for Events

If this flag is set, then the SPIB will set the Restore bit on events which are being removed. This option only works on the F120/F220 panels when the **$m** template escape code is used, which makes the SPIB obtain the description of the event from the panel itself using a special request.

3.4 Configure Serial Output

This option is used to adjust the behaviour of the serial output port. The available settings are outlined below:

3.4.1 Use RS485 Output

Selects whether the SPIB uses RS485 serial communications (via connectors K5 or K8 on the PCB), or RS232 communications (via 9-pin D-sub connector K4).

3.4.2 Port Speed

This can be set to any value between 300 and 230400 baud, and must match the Modbus master's communication rate.

3.4.3 Output Parity

Choose the parity mode for the connection. Can be set to None, Even, Odd, Mark & Space.

3.4.4 Output Char Length

Sets the character length for the output connection. May be set to values between 5 & 8.

3.4.5 Output Stop Bits

Sets the number of stop bits sent on the output port. Can be set to 1, 1.5 or 2.

3.5 Save Configuration Data to Flash

This option saves the current SPIB configuration to Flash memory, so that it is restored on power-up or reset of the SPIB. This should be done after any action has modified the current (volatile) configuration data and it has been deemed to operate satisfactorily.

3.6 Revert to Saved Configuration

This option overwrites the current SPIB configuration with the saved configuration stored in Flash memory. The View Stored Options action is executed automatically after this is done.

3.7 Restore Default Configuration

This option overwrites the current SPIB configuration with the factory defaults. The View Stored Options action is executed automatically after this is done.

3.8 Export Configuration

This option outputs the SPIB configuration in a form that can be saved in a text file for use with the Import Configuration function (see below). This example output is the default configuration:

```
#==========================================
# Configuration export
# VER: x.xx (dd-mmm-yyyy)
#==========================================
Flags=0x00
ThrottleTime=0
HeartbeatTime=0
Panel.QueueMask=0xFFFFFFFF
Panel.Baud=9600
Panel.TextTimeout=4000
Panel.MimicAddress=None
Output=19200N81
MessageTemplate=$t: $m\r\n
TimeFormat=%F %T
EventAddText=[added]
EventRemoveText=[cleared]
AcknowledgeText=
AcknowledgePeriod=500
MessageRetries=0
#==========================================
```

3.9 Import Configuration

This allows the importation of the SPIB configuration exported using the Export Configuration option above. Selecting Import starts a line-oriented interface which expects lines in a particular format, where each line sets a portion of the configuration.

```
--- Configuration import.
--- Enter configuration lines.
------ enter EXIT to finish, or QUIT to abort without updating.
```

The Import function ends when an EXIT or QUIT command is entered. The general format of each line is

```
<parameter>=<data>
```

Where <parameter> is one of the named items, and <data> is the corresponding value for the item. Lines starting with # are treated as comments & ignored. The special commands EXIT and QUIT complete the process, either updating the internal configuration (EXIT) or aborting without update (QUIT).

3.9.1 Parameters for Configuration Import

The table below gives all of the configurable options for the SPIB. Note that the import parser is not case-sensitive with respect to the parameter names.

The parameters represented in hexadecimal are interpreted as a sum (or binary OR) of single-bit values. So if the hexadecimal value is 0x1A (or 26 decimal = binary 00011010_2), say, then this represents the 3 items with values 0x10 (00010000_2), 0x08 (00001000_2) and 0x02 (00000010_2) all being set.

Table 3-1: Configuration Parameters

Parameter	Default Value	Description
Flags	0x00	Hexadecimal mask representing the SPIB's system flags. Valid values (others are reserved for future use) are: 0x01: Use RS485 output instead of RS232. 0x02: Send restore events 0x04: Set restore flag for restored events. 0x08: Always generate descriptors.
ThrottleTime	0	Sets the minimum time (in milliseconds) between event outputs.
HeartbeatTime	0	Force a "heartbeat" event to be output if no other events have been generated within the specified time (in milliseconds). A value of zero disables this function.
Panel.QueueMask	0xFFFFFFFF	Hexadecimal mask representing the panel event queues the SPIB is monitoring. This is panel-specific, but typically the event queues are tagged with the following values: 0x01: Alarm 0x02: Isolate/Disable 0x04: Loop Faults 0x08: System Faults 0x10: System Information
Panel.Baud	9600	Connection speed to the panel's RS485 bus connection. Should be left at default value for correct operation.
Panel.TextTimeout	4000	Various message template options require the SPIB to query the connected panel for text descriptors, possibly more than one per message. This parameter determines the maximum time (in milliseconds) the SPIB will wait to acquire all of these before outputting the message anyway, substituting replacement text if necessary.
Panel.MimicAddress	None	Determines whether the SPIB should emulate a mimic device on the panel. This is to give the panel a means of determining whether the SPIB is functioning correctly. Possible values are: None: disabled LEDn: LED mimic (n=1..8) LCDn: LCD mimic (n=1..32)
Output	19200N81	Serial port configuration for the output message port. This combines the following values into a single string: <baud><parity><bits><stopbits> baud: baud rate (300..230400) parity: **N**one, **O**dd, **E**ven, **M**ark, **S**pace bits: bits per character (5..8) stopbits: **1**=1**, 5**=1.5, **2**=2

Parameter	Default Value	Description
MessageTemplate	$t: $m\r\n	Template controlling the output format for events. See the **Message Template Format** section below for details.
TimeFormat	%F %T	Format for the time output with the **$t** template option. See
EventAddText	[added]	Text added by the **$a** template option for new events.
EventRemoveText	[cleared]	Text added by the **$a** template option for restored events.
AcknowledgeText		Text required for message acknowledgement by remote system. Leave blank for no acknowledgement.
AcknowledgePeriod	500	Time to wait for acknowledge text.
MessageRetries	0	Number of attempts SPIB makes to re-send message if acknowledgement is not received within the period. Note that a setting of zero is equivalent to 1.

4. MESSAGE TEMPLATE FORMAT

The message template defines the format of the event messages generated by the SPIB. The template combines plain text with special escape sequences acting as placeholders for information specific to the event being output. This allows for messages to be tailored to suit the requirements of the monitoring system, whether it recognises free-format, fixed-width or character-delimited text.

The recognised escape sequences are:

Table 4-1: Message Template Escape Sequences

Sequence	Result
$m	Main event message.
$P	Point ID.
$p	Point descriptor as retrieved from the panel. If it not set, then it defaults to <point test>.
$Z	Zone number. Events with no zone affiliation will have zero in this field.
$z	Zone descriptor as retrieved from the panel. If it not set, then it defaults to <zone text>.
$t	Time/Date as defined with timestamp format.
$d	Device type.
$a	Add or Remove text as defined in configuration.
$S	Zone state. See the Status Values section below for details.
$s	Point state. See the Status Values section below for details.
$C	Event class – full. See the Event Class Values section below for details.
$c	Event class – simple. See the Event Class Values section below for details.
$q	Event queue number.
$$	The ‘$’ symbol.
$!	Create a delay in the output at this point. See Section 4.6 below for details.
$_	A space.
\a	Alert character – ASCII hex code 07.
\b	Backspace character – ASCII hex code 08.
\f	Form-feed character – ASCII hex code 0C.
\n	Newline character – ASCII hex code 0A.
\r	Carriage return character – ASCII hex code 0D.

\t	Tab character – ASCII hex code 09.
\v	Vertical tab character – ASCII hex code 0B.
\\	Backslash character – ASCII hex code 5C
\xHH	Generates ASCII hex code HH.

In the case of the codes prefixed with "$", the SPIB allows modifiers between the "$" and the terminating character, in order to apply additional formatting information. The full syntax is

<flags><width>[.<limit>]

The <width> field determines the minimum width that the output will have – the SPIB will pad the result to at least <width> characters. The optional <limit> field determines the maximum length of the result; the output will be truncated to <limit> characters. The <flags> field affects how the result is formatted as follows:

Table 4-2: Format Modification Flags

Flag	Result
"-"	Left-justify when padding (default is to right-justify).
"0"	Pad numeric values with zeroes.
" "	Signed numeric values begin with a space, or a sign if negative.
"+"	Numeric values always include a sign.
"#"	Hexadecimal values start with "0X".

Some examples of using the format modifiers are shown below (spaces shown as "□"):

Table 4-3: Format Modifier Examples

Value	Type	Sequence	Result
23	Zone (unsigned number)	$Z $05Z $-4Z	23 00023 23□□
1C	Zone Status (hex number)	$03C $#06C $5C	01C 0X001C □□□1C
Desc567890	Message (text)	$15m $-12m $.8m $5m	□□□□□Desc567890 Desc567890□□ Desc5678 Desc567890
□	Space (text)	$6_	□□□□□□

4.1 Timestamp Format

The timestamp parameter has its own formatting escape codes in much the same way as the message template has. Note that many codes have duplicate effects on the SPIB, owing to a simplified version of a standard conversion library being used on the SPIB. The entire list is included for completeness.

The table below has examples that all refer to the time "Tuesday 5th March 2019 at 8:24:51pm" (spaces shown as "□").

Table 4-4: Timestamp Formatting Codes

Code	Description	Example
%a	The abbreviated name of the day of the week.	Tue
%A	The full name of the day of the week.	Tuesday
%b	The abbreviated month name.	Mar
%B	The full month name.	March
%c	The "preferred" date and time representation. Equivalent to "%a %b %e %T %Y"	Tue□Mar□□5□20:24:51□2019
%C	The century number (year/100) as a 2-digit integer.	20
%d	The day of the month as a decimal number (range 01 to 31).	05
%D	Equivalent to %m/%d/%y.	03/05/19
%e	Like %d, the day of the month as a decimal number, but a leading zero is replaced by a space.	□5
%F	Equivalent to %Y-%m-%d (the ISO 8601 date format).	2019-03-05
%G	The ISO 8601 week-based year with century as a decimal number.	2019
%g	Like %G, but without century, that is, with a 2-digit year (00–99).	19
%h	Equivalent to %b.	Mar
%H	The hour as a decimal number using a 24-hour clock (range 00 to 23).	20
%I	(Uppercase "I") The hour as a decimal number using a 12-hour clock (range 01 to 12).	08
%j	The day of the year as a decimal number (range 001 to 366).	064
%k	The hour (24-hour clock) as a decimal number (range 0 to 23); single digits are preceded by a blank. (See also %H.)	20
%l	(Lowercase "L") The hour (12-hour clock) as a decimal number (range 1 to 12); single digits are preceded by a blank. (See also %I.)	□8
%m	The month as a decimal number (range 01 to 12).	03
%M	The minute as a decimal number (range 00 to 59).	24
%n	A newline character (ASCII hex code 0A).	N/A

Code	Description	Example
%p	Either "AM" or "PM" according to the given time value, or the corresponding strings for the current locale. Noon is treated as "PM" and midnight as "AM".	PM
%r	The time in a.m. or p.m. notation. This is equivalent to %I:%M:%S %p.	08:24:51□PM
%R	The time in 24-hour notation (%H:%M).	20:24
%S	The second as a decimal number (range 00 to 60).	51
%t	A tab character (ASCII hex code 09).	N/A
%T	The time in 24-hour notation (%H:%M:%S).	20:24:51
%u	The day of the week as a decimal, range 1 to 7, Monday being 1. See also %w.	2
%U	The week number of the current year as a decimal number, range 00 to 53, starting with the first Sunday as the first day of week 01. See also %V and %W.	09
%V	The ISO 8601 week number of the current year as a decimal number, range 01 to 53, where week 1 is the first week that has at least 4 days in the new year. See also %U and %W.	10
%w	The day of the week as a decimal, range 0 to 6, Sunday being 0. See also %u.	2
%W	The week number of the current year as a decimal number, range 00 to 53, starting with the first Monday as the first day of week 01.	09
%x	The “preferred” date representation without the time.	03/05/19
%X	The “preferred” time representation without the date.	20:24:51
%y	The year as a decimal number without a century (range 00 to 99).	19
%Y	The year as a decimal number including the century.	2019
%%	A literal '%' character (ASCII hex code 25).	%

4.2 Point ID Values

The SPIB will generate a Point ID for each event, even if the event relates to some object which would not normally be considered a point type, such as a smoke detector. This is so there is some data to be output when the **$P** escape sequence is used. The Point ID will be one of the following:

Table 4-5: Point ID list

Event Source	Example(s)	Description
Panel	Panel	Catch-all ID used for any panel-generated events not otherwise represented below.
Loop device	L03D062 L02M004	Detector (e.g. optical, heat). Module (e.g. callpoint, relay).
Zone	Z0035	Fire zone. Generated for events relating to a complete zone (e.g. Zone Isolate/Disable).
Zone Timer	ZTmr0005	Zone Timer events (F120/F220).
Logic Block	LB017	Logic Block events (F120/F220).
Gate	Gate03	Boolean Gate events (F100).
Timer	Tmr001	General-purpose Timer events (F120/F220).
Network Input	Net008	Events generated by mapped Network Input objects.
Network	Network	Events generated by the attached network card.
Local MCP	LocalMCP	Local Manual Call Point events (Australian panels).
Sprinkler	Sprinkler	Sprinkler (DBA) system input events (New Zealand panels).
LED Mimic	LED04	Events generated by LED mimic interface cards.
LCD Mimic	LCD01	Events generated by LCD mimic interface cards. Note that “LCD00” refers to the main display/keyboard.
Fan Control	Fan007	Events generated by the Fan Controller logic (F120/F220).
Battery	Battery	Battery-related events.
Mains	AC	Main AC power events.
Power Supply	PSU	Other events referring to the panel’s power supply.
Day Timer	DayTmr02	Events related to the “Day Timer” (F100 only).
Loop	Loop04	Events directly generated from loops, e.g. Loop Short circuit.
AAF	AAF0123	Alarm Acknowledge Facility events.
Door Holder	DHR	Events from the on-board Door Holder relay.
ACF	ACF	Events from the on-board ACF relay (Australian panels).
AUX	AUX	Events from the on-board AUX relay (NZ panels).
BCO	BCO	Bell Cut Off events (NZ panels).
Evac	Evac	Trial Evacuation events (NZ panels).
WarnSys	WarnSys	Warning System events (Australian panels).
Sounders	Sounders	Sounder system events (NZ panels).

Event Source	Example(s)	Description
Brigade	Brigade	Events relating to the Brigade interface (NZ panels).
ASE	ASE	Events relating to the ASE interface (Australian panels).
Door	Door	Events from the cabinet doors.
Door Interlock	I/Lock	Door Interlock events.

4.3 Device Type Values

These values are generated when the **$d** escape appears in the template, depending on the source of the event. Note that virtual detectors will have a “v” prefixed to the code shown here, for example “vOPT” or “vLASR”.

Table 4-6: Standard device types

Type Code	Description
----	Unconfigured device (no type available).
N/A	Non-device object.
HEAT	Heat detector.
ION	Ionisation detector.
OPT	Optical (photoelectric) detector.
OMNI	Omni™ multi-criteria detector.
LASR	Laser detector.
ACCL	Acclimate™ Photo/thermal detector.
BEAM	Analogue beam-type detector.
BMIF	Conventional beam detector via dedicated interface.
FAST	FAAST™ aspirating detector.
FLTX	Filtrex™ smoke detector for difficult environments.
LPRS	Pertronic Loop Responder conventional interface device.
M512	System Sensor conventional interface device.
MCP	Manual Call Point.
MON	Monitored input.
PLNT	Plant monitoring device.
SIP	Sub Indicator Panel monitoring device.
ZMU	Zone Monitor Unit.
FSW	Flow Switch monitoring device
PSW	Pressure Switch monitoring device.
SPR	Input device monitoring sprinkler system.
ACF	Relay device tied to the ACF subsystem (Australian panels).
AUX	Relay device tied to the AUX subsystem (NZ panels).

Type Code	Description
DHR	Relay device tied to the Door Holder subsystem.
RLY	Relay device. M=monitored.
SND	Relay device tied to the Sounder subsystem (NZ panels).
WRN	Relay device tied to the Warning System (Australian panels).
FANC	Pertronic Fan Controller device.
FANR	Pertronic Fan Relay device.
ISOL	Isolate interface device.
SW3	3-way switch input.
SW SW_H	Simple switch input device. H=hidden.
VES	VESDA® aspirating detector via dedicated interface.
VMD	Valve Monitor device.
????	Unknown device type.

4.4 Status Values

The Status values generated by **$s** and **$S** escape sequences capture some basic information about each event & present it as a hexadecimal representation of the state relating to the object generating the event. The Zone status value (**$S**) will only contain non-zero data if the object generating the event has a non-zero zone allocation, otherwise it shows the aggregate state of all other active events for the same zone. The values are all bit values which are summed to produce the final value:

Table 4-7: Status Bit Values

Name	Bit Value	Description
Alarm	0001	Set if device/object is in Alarm state.
Acknowledge	0002	Set if the alarm has been acknowledged.
Defect/Fault	0004	Object is in Defect (=Fault for Australian panels) state.
Isolate/Disable	0008	Object has been Isolated (=Disabled for ISO standard panels).
Missing	0010	Object is missing or not communicating with its panel.
Prealarm	0020	Detector is in Prealarm state.
Maintenance	0040	Detector has reached maintenance limit and should be cleaned.
Running	0080	Timer-type object has been triggered and is counting down.
Active	0100	Non-alarm device has activated.
Event	0200	Informative event.

4.5 Event Class Values

The Event Class value is somewhat like the Status, but gives a descriptive category for the event being output. Possible values for the **$C** (full event) sequence are given below:

Table 4-8: Event Class list

Event Class	Description
SPIB	Event generated locally by the SPIB.
RESTORE	Event being removed.
INFO	Low-priority informative event.
ACTIVE	Non-alarm device/object activated.
RUNNING	Timer-type object running.
DEFECT	Defect (=Fault in Australia) event.
UNKNOWN	Unable to be categorised.
ISOLATE	Isolate (=Disable for ISO standard panels).
PREALARM	Detector in Prealarm.
ALARM(ACKED)	Acknowledged alarm.
ALARM	Device/object in Alarm.
ALARM(TEST)	Device/object in Test Alarm.
ALARM(SMOKE)	Smoke Alarm from detector.
ALARM(HEAT)	Heat Alarm from detector.
ALARM(MCP)	Alarm from Manual Call Point.

Note that for the **$c** sequence, the output is identical, simply with the additional qualification in parentheses removed for Alarm events.

4.6 Embedded Delays

The **$!** sequence will cause the SPIB to pause output for a short time at the point in the message where the **$!** appears. This can be used where the monitoring system might require some time to process the preceding part of the message.

By default, the **$!** sequence will cause a 500ms delay. If some other period is required, the format modifier can contain the required time; for example, to delay for 200ms, use the sequence **$200!**. Delays of up to 30s can be added this way.

5. INSTALLATION

The SPIB board would normally be mounted in an alarm panel but can also be mounted in a separate case. The SPIB hardware occupies a standard Pertronic footprint that allows mounting on top of or in place of the Auxiliary Relay Board, alternatively the SPIB hardware can be mounted directly on the panel gear plate.

6. ORDERING INFORMATION

Ordering Information:		
Product Code	**Description**	
SPIB-PRINTER	Printer HLI (check interfacing required) (RS485 cable and standoffs included)	

Document Change History

Issue Number	Change Note	Description of Changes	Author
0.01		First Draft	JDE
2.00	CN2691	First release	JPF
2.10	CN2956	Updated default values	RJK
2.20	CN3179	High Speed RS485 compatibility	RJK

PERTRONIC SALES AND TECHNICAL SUPPORT

New Zealand

Pertronic Industries Limited

Head Office
17 Eastern Hutt Road
Wingate
Lower Hutt
Phone +64 4 5673229
sales@pertronic.co.nz

Auckland
3 Gloucester Park Road
Onehunga
Auckland 1643
Phone +64 9 633 0226

www.pertronic.co.nz

Australia

Pertronic Industries Pty Limited

Melbourne
Unit B2
2A Westall Rd
Springvale
VIC 3171
Phone +61 3 9562 7577
sales.vic@pertronic.com.au

Sydney
Unit 19
287 Victoria Rd
Rydalmere
NSW 2116
Phone +61 2 9638 7655
sales.nsw@pertronic.com.au

Brisbane
Unit 3
43-49 Sandgate Rd
Albion
QLD 4010
Phone +61 7 3255 2222
sales.qld@pertronic.com.au

Adelaide
65 Manton Street
Hindmarsh
SA 5007
Phone +61 8 8340 9533
sales.sa@pertronic.com.au

Perth
3/71 Beringarra Ave
Malaga
WA 6090
Phone +61 8 6555 3008
sales.wa@pertronic.com.au

www.pertronic.com.au