PERTRONIC
SPIB PROTECTOWIRE
FIBERSYSTEM 8000
INTERFACE
TECHNICAL MANUAL

Valid For:

SPIB Protectowire Firmware	V1.02
SPIB Hardware	V1.50
Panel F220	V4.00 and later
Panel F120A, full functionality	V5.00

ISSUE 1.2

Serial Number:

Date of Manufacture: … / … / …

The content of this manual is copyright.

This document is to be used only for operating or maintaining Pertronic Fire Alarm systems.

This document is not to be reproduced, photocopied or passed in part or whole to a third party without the express, written authorisation of

Pertronic Industries Pty Limited

CONTENTS

1.	Description	1
1.1	Operation	1
1.2	Interface Connections	2
2.	LHD Controller Setup	4
3.	Loop Device Emulation	4
3.1	LHD Zone States	5
4.	Configuration	5
4.1	View Stored Options	5
4.2	Panel Communications Setup	6
4.3	Modbus Communications Setup	7
4.4	Configuration Save/Restore/Default	7
5.	Specifications:	7
6.	Installation	8
7.	Ordering Information	8
PERTRONIC SALES AND TECHNICAL SUPPORT		10

FIGURES

Figure 1-1 Typical SPIB Modbus application 2

Figure 1-2 SPIB hardware block diagram 3

TABLES

Table 1-1 LED Indicator Functions 1

Table 1-2 SPIB Interfaces 3

Table 2-1 Modbus zone to register mapping 4

Table 5-1 Specifications 8

Table 7-1 Ordering Information 8

1. DESCRIPTION

This interface board is a firmware variant of the Pertronic Industries Special Purpose Interface Board (SPIB) that translates the status of a Protectowire® FiberSystem 8000 Linear Heat Detector (LHD) to emulated loop devices on the Pertronic *F120A* or *F220* fire alarm panel.

1.1 Operation

The SPIB polls the LHD via Modbus to obtain the state of the zonal Alarm & Fibre Break conditions on the device, the LHD supports up to four channels of up to 256 heat zones per channel. Configuration of the LHD is done using a proprietary Protectowire® tool that defines zone size (length of fibre-optic cable to be monitored) and alarm conditions for each zone (absolute temperature and/or rate-of-rise profiles can be used per zone). The LHD system has the ability to detect fibre breaks with enough precision to generate a Fibre Break event corresponding to the length of fibre comprising each alarm zone. Prealarm zones can also be created simply by setting up a new zone covering the same linear span as the Alarm zone and using a lower temperature threshold.

The SPIB collates the LHD's Modbus information into emulated heat detector states across up to 4 loops of 100 detectors each in the fire alarm panel.

1.1.1 LED Indicators

LED Name	Description
Board Fault	Activates whenever a system-level fault is present: • Panel not connected (no loop emulation polls detected). • Modbus server (LHD controller) not detected. Note that multiple Modbus requests are made to the LHD, depending on the number of emulated loops; all must have successful replies to maintain normal state.
Poll	Blinks (for 20ms) for every successful Modbus data reply from the LHD controller.
Fire	Active if any LHD zone is in Alarm state.
Isolate	Unused
Defect	Active if any LHD zone is in Prealarm state.
Normal	Active if all LHD zones are in the Normal state.

Table 1-1 LED Indicator Functions

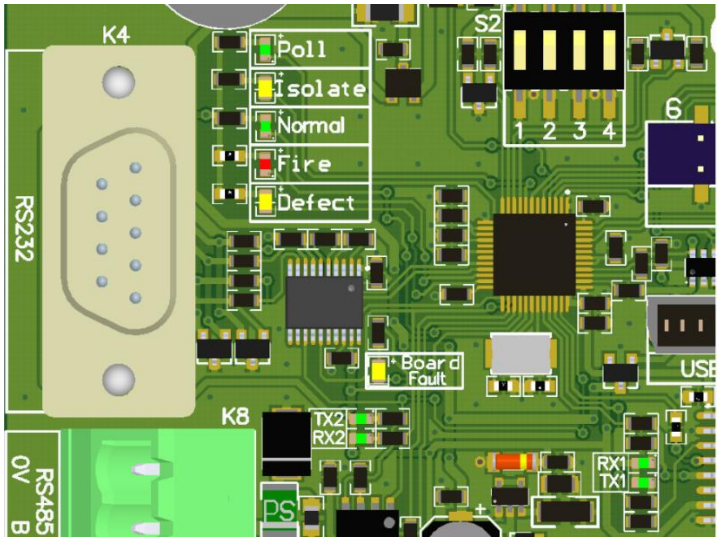

Figure 1-1: Detail View of SPIB LEDs

1.2 Interface Connections

The SPIB provides three serial interfaces, one is an isolated RS485 interface for panel connection via the Pertronic mimic bus, the second for Modbus connection and is selectable between an RS232 or an RS485 interface, and the third is a USB server (previously called slave) port in the Communication Device Class (CDC) mode to emulate a 3rd serial port for configuration.

The SPIB can interface to both the high speed and legacy/low speed mimic bus on the F220 and the legacy bus on the F120A. Not all of the SPIB interfaces are used in the Modbus application.

The SPIB layout is shown below:

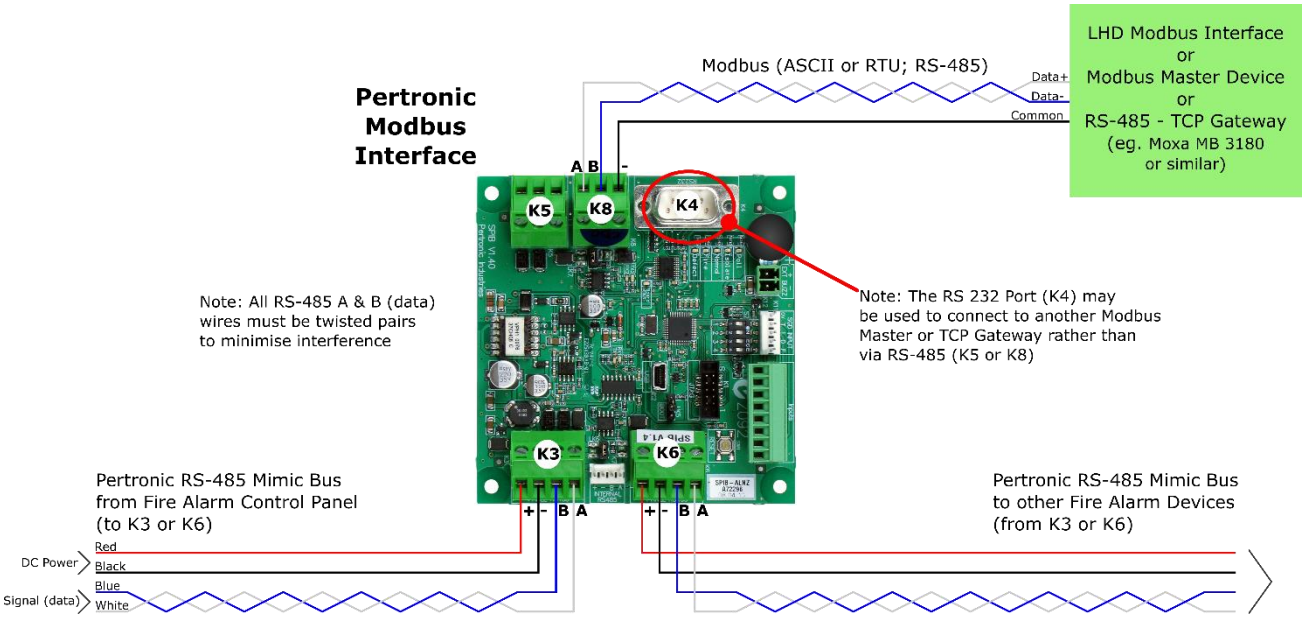

Figure 1-2 Typical SPIB Modbus application

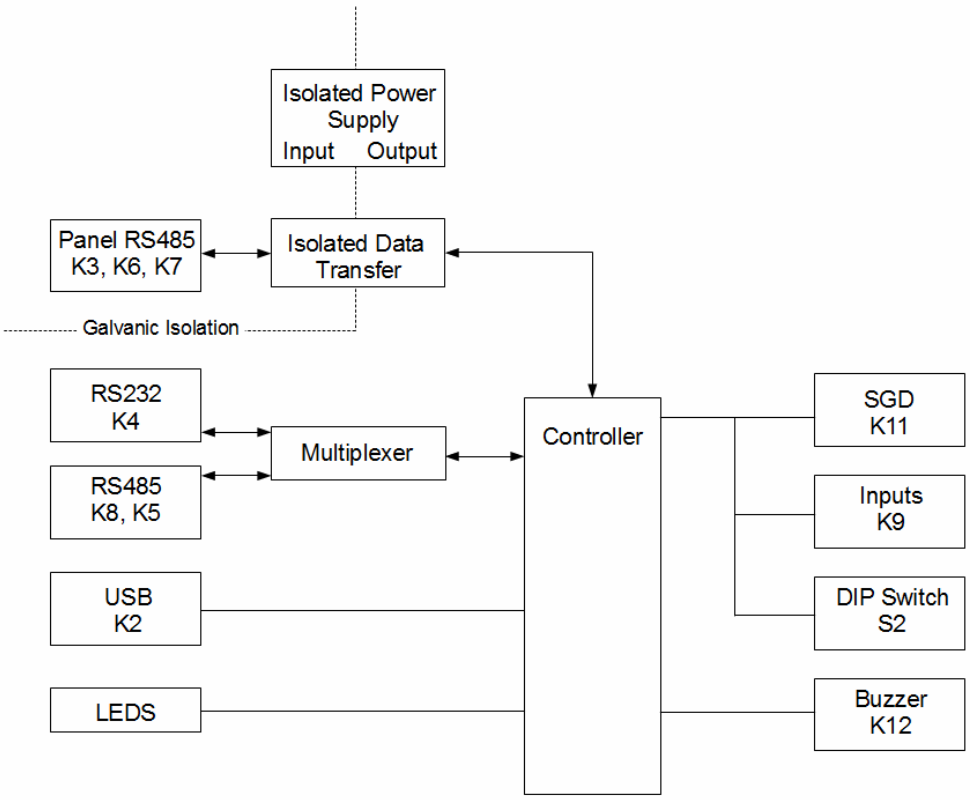

Figure 1-3 SPIB hardware block diagram

Interface	Connector	Description
Panel RS485	K3, K6, K7	Alarm panel connection via the Pertronic mimic bus. Galvanically isolated from the other SPIB ports. The SPIB is also powered from this interface in normal operation.
RS232	K4	Modbus connection. Either this port or the adjacent RS485 port can be configured for Modbus operation.
RS485	K5, K8	Modbus connection. Either this port or the adjacent RS232 port can be configured for Modbus operation.
USB	K2	USB 2 device port, with a mini B socket, that emulates a serial port and is used to configure the SPIB. The SPIB is powered from this USB port during configuration, no RS485 power is required.
Inputs	K9	Some of these inputs are used for particular functions.

Table 1-2 SPIB Interfaces

The SPIB is powered from the “Panel RS485” connectors (any one of K3, K6 or K7). Power to the remainder of the board is provided by a galvanically-isolated DC-DC converter, the RS485 data communications from the panel are also galvanically isolated. This isolation prevents external devices connected to the SPIB hardware causing earth fault issues on the connected panel. The Panel RS485 isolation barrier is rated as “Functional Insulation”.

2. LHD CONTROLLER SETUP

The SPIB expects the linear heat zone information for the fibre to be made available at the following Modbus coil registers:

Emulated device location	Modbus Coil address range
Loop 1, detector address 1..100: Alarm	0001..0100
Loop 2, detector address 1..100: Alarm	0101..0200
Loop 3, detector address 1..100: Alarm	0201..0300
Loop 4, detector address 1..100: Alarm	0301..0400
Loop 1, detector address 1..100: Fibre Break	0401..0500
Loop 2, detector address 1..100: Fibre Break	0501..0600
Loop 3, detector address 1..100: Fibre Break	0601..0700
Loop 4, detector address 1..100: Fibre Break	0701..0800
Loop 1, detector address 1..100: Prealarm	0801..0900
Loop 2, detector address 1..100: Prealarm	0901..1000
Loop 3, detector address 1..100: Prealarm	1001..1100
Loop 4, detector address 1..100: Prealarm	1101..1200

Table 2-1 Modbus zone to register mapping

The zone to Modbus register mapping is done by uploading special Modbus description files in Comma Separated Values (CSV) format directly to the instrument via its configuration software. Only the “Modbus Coil” CSV file is required to be configured for SPIB operation.

Since the zone configuration is highly dependent on the site layout and application, these will have to be customised for every application. Example configuration files are available on the CD supplied with the instrument.

The SPIB code has no control over what the different zones on the LHD controller are set up to; it simply assumes the Modbus registers above reflect the specified state. As long as the ranges are set up as described, the SPIB should function as expected.

3. LOOP DEVICE EMULATION

The panel & SPIB communicate via a special loop emulation protocol that utilises unused physical loops on the panel. The panel periodically compares the loop device configuration with the actual number of Loop Drivers configured at the panel. In normal operation, configuring a device at an “invalid” address beyond the range of configured loop driver boards will make the generate Missing events for any of these addresses.

However, if the loop emulation option is enabled in the configuration, this behaviour is modified. The panel will send a special emulation status request via the RS485 mimic bus for every loop beyond the configured loop driver limit that has a configured device in it. If there is no response to this request, the panel behaves as though emulation is disabled, and generates Missing events as usual (after a delay until the panel decides that the emulator is not connected).

Note:

Loop Emulation is fully supported on F220`s high speed RS485 bus with panel software v8.0+ and on the F220 Legacy, or low speed, RS485 bus with panel software v4.0 to 7.04.

3.1 LHD Zone States

For this application, the SPIB generates Alarm or Prealarm events for alarms in the specified LHD zones (see table above) and Defect for fibre break; the Missing event can only be generated if the panel fails to communicate with the SPIB, as outlined above.

Note that the **Alarm** state generated by the SPIB is still interpreted by the panel according to the device configuration, so will not necessarily result in an alarm condition at the panel, but can still be used for mapping and logic functions, just as any other physical device can.

4. CONFIGURATION

The unit can be completely configured via the built-in terminal interface. The SPIB operates a USB port in Communication Device Class client mode, emulating a standard serial port. A PC running a simple terminal emulation program can be used to communicate with the SPIB after installing the appropriate driver. The data format is irrelevant in USB mode, since there's no physical serial connection; the port always operates at the maximum rate possible.

Upon reset (or pressing the '?' key in the terminal), the SPIB responds with the following screen of data:

```
=====================================================
  P E R T R O N I C   I N D U S T R I E S   L T D
      Simple Protocol Interface Board (SPIB)
           F120 Protectowire Interface
         Version 1.01, 19-Jan-2017 [f7179]
=====================================================
Interactive Options:

   V) View stored options
   P) Panel communications setup
   M) Modbus communications setup
   S) Save configuration data to Flash
   R) Revert to saved configuration
   D) Restore default configuration
Selection:
```

At this point the SPIB is expecting one of the keys shown (V, P, M, S, R or D) to be pressed. The main menu options are discussed in detail below:

4.1 View Stored Options

Pressing **V** at the prompt sends the current configuration settings to the terminal as follows:

```
-----------------------------------------------
Stored Options
-----------------------------------------------

+++ Modbus Communications +++
Use RS485 output: YES
Use ASCII mode for Modbus: NO
Port speed: 19200
Slave address: 1
Modbus timeout: 10ms
Modbus delay: 0ms
+++ Panel Communications +++
Port speed: 9600
Mimic Emulation: Disabled
Emulated loop start: 0
Emulated loop count: 1
```

Note that the values shown above are the defaults.

4.2 Panel Communications Setup

This option allows setting up the SPIB parameters affecting panel communications.

4.2.1 Port Speed

The SPIB board automatically detects which Panel`s Mimic interface is being used, the high speed or legacy bus and sets the baud rate accordingly. With the legacy bus the default baud rate is 9600 bps and 115,200 bps for the HS485 bus. Port Speed allows the user to change the default baud rate to either 300 or 115200.

4.2.2 Mimic Emulation Setup

The SPIB can be programmed to emulate a standard LED or LCD mimic in order to provide backup connection monitoring between the panel and the SPIB. If the emulation mode is not set at the panel, or the configuration does not have the correct loop addresses programmed, then the panel won't necessarily explicitly indicate anything is wrong if the SPIB is not communicating properly.

The SPIB can be set to LED mimic, address 1 to 8, or LCD mimic, address 1 to 32.

4.2.3 Emulated Loop Start

This sets the base address for the 4 emulated loops that the SPIB supports. See section "2 LHD Controller Setup" above for operational details. If this value is set to zero (the default), emulation is disabled. Note that this **must** be set to a valid value corresponding to the devices configured at the panel.

4.2.4 Emulated Loop Count

This parameter controls the number of loops the SPIB will provide data for to the panel. This affects the Modbus registers polled by the SPIB, allocated in chunks of 100 sequential "coils" as per the table in LHD Controller Setup above.

Example: **Emulated Loop Start** is set to 11 and the **Emulated Loop Count** is set to 3. The SPIB will request Modbus information for addresses 1..300, 401..700 and 801..1100 (corresponding to Alarm, Break & Prealarm states respectively), with the emulated devices appearing at L11D001 to L11D100, L12D001 to L12D100 and L13D001 to L13D100.

Note that the panel will only request data from the SPIB if at least one device in the emulated loop is configured. Also, the SPIB will still generate state information for all 100 devices in the same loop, even if there is no corresponding device configured on the panel. So, for instance, if the LHD controller generates an Alarm event for zone 92, but the panel only has addresses 1 to 75 configured, the panel will still generate an Alarm at the unconfigured address 92.

4.2.5 Double-Knock Prealarm Escalation

The SPIB can optionally apply "double-knock" logic to prealarms in adjacent loops. This is used in the event that the LHD controller is monitoring a second fibre alongside the first to provide redundancy. If this logic is enabled, the SPIB will escalate Prealarms in 2 adjacent loops to an Alarm state. This logic applies for prealarms in the 1st and 2nd emulated loops as well as the 3rd and 4th loops, if used.

The option is not available unless there are at least 2 emulated loops configured. If enabled, the logic only applies to pairs of loops, so that if only 3 loops are being emulated, the setting will have no effect on the 3rd loop.

Note that the escalated Alarm event is always generated on the 2nd loop of the pair only.

4.2.6 Double-Knock Delay

This is a programmable delay between reporting the 2nd Prealarm condition and escalating to Alarm, in order to allow any external monitoring or logging to provide a clue as to whether the alarm is the result of an escalation. This can be set to zero to provide an instant Alarm transition. Note that any value below the update interval for the emulated device (typically 1s) could result in the same effect as a delay of zero.

4.3 Modbus Communications Setup

This option allows setting up the SPIB parameters affecting Modbus communications.

4.3.1 Use RS485 Output

Selects whether the RS232 port or the RS485 port (connectors K5 or K8 on the PCB) is used for Modbus communication. The SPIB hardware comprises a single UART device which is software-selectable to use either an RS232 or RS485 transceiver; it is not possible to use both simultaneously. Selecting RS485 mode allows multidrop operation so that one Modbus client (previously called master) can communicate with multiple servers over the same data cable.

4.3.2 Modbus Mode

Selects whether the SPIB uses ASCII mode or RTU (binary) mode when transmitting data. RTU mode is more efficient, as ASCII mode uses roughly twice as much data to transmit the same information.

4.3.3 Modbus Port Speed

This is selectable to any value between 300 and 115200bps; the SPIB has a precise fractional baud rate generator, so will support any “standard” rate at a high level of accuracy, and will support non-standard rates if required.

4.3.4 Modbus Server Address

Selects the address for the LHD’s Modbus interface. This must correspond to the LHD setting, otherwise communication will not occur.

4.3.5 Modbus Reply Delay

This parameter forces a delay between receiving a poll from the client & replying to it. This is intended for use in RS485 communications where the client may take a finite time after the last byte sent to switch to receive mode. This can occur in multi-tasking operating systems (e.g. Windows®) if the Modbus communication process loses its time-slice as the last byte is transmitted. In such cases the first byte(s) of the SPIB’s reply may be lost as the client RS485 hardware is still in transmit mode.

4.4 Configuration Save/Restore/Default

The “live” SPIB settings are held in RAM, so settings can be tested immediately, as they are adjusted using the menus. On reset or power-up, the RAM copy of the settings is copied from the CPU’s non-volatile Flash memory. These options allow maintenance of the overall configuration.

4.4.1 Save Configuration to Flash

Copies the current RAM settings to Flash memory; they become the settings used after board reset.

4.4.2 Revert to Saved Configuration

Replaces the RAM copy of the configuration with the copy saved in Flash.

4.4.3 Restore Default Configuration

Reverts the RAM configuration to the factory defaults; note that this still must be saved to Flash in order to restore the factory configuration on power-up or reset.

The factory default settings are those shown in the “View Stored Options” section above.

5. SPECIFICATIONS:

Supply Voltage	11 Vdc to 30 Vdc
Current Consumption (Typical)	21 mA @ 24 Vdc
Configuration Connection	USB Mini-B

Mimic Bus Connection	Legacy/low speed RS-485, 9600 bit/s High Speed RS-485, 115200 bits/s Isolated (Functional insulation only)
Modbus Connection	Configurable RS-485 or RS-232, 300 bit/s to 115,200 bit/s
Modbus Mode	ASCII or RTU (binary)
Modbus Relay Delay	Configurable
Modbus Timeout Checking	Configurable
Cable Termination	0.5 mm^2 to 2.5 mm^2, stranded cable
PCB Dimensions	94.0 mm x 96.5 mm x 30 mm H x W x D
Operating Temperature	-10 °C to +50 °C
Humidity	≤ 95 % RH, non-condensing

Table 5-1 Specifications

6. INSTALLATION

The SPIB board would normally be mounted in an alarm panel but can also be mounted in a separate case. The SPIB hardware occupies a standard Pertronic footprint that allows mounting on top of or in place of the Auxiliary Relay Board, alternatively the SPIB hardware can be mounted directly on the panel gear plate.

7. ORDERING INFORMATION

Ordering Information:		
Product Code	**Description**	**NZFPA Listing No:**
SPIB-PWF8000	SPIB – Protectowire Fiber8000 Interface	

Table 7-1 Ordering Information

Document Change History

Issue Number	Reason for Update	Description of Changes	Author
1.03		First Draft	JPF
1.05	First release	First release	JPF
1.10	Updated Fig1-1	CN2955	RJK
1.20	HS485,	CN3185	RJK

PERTRONIC SALES AND TECHNICAL SUPPORT

New Zealand

Pertronic Industries Limited

Head Office
17 Eastern Hutt Road
Wingate
Lower Hutt
Phone +64 4 5673229
sales@pertronic.co.nz

Auckland
3 Gloucester Park Road
Onehunga
Auckland 1643
Phone +64 9 633 0226

www.pertronic.co.nz

Australia

Pertronic Industries Pty Limited

Melbourne
Unit B2
2A Westall Rd
Springvale
VIC 3171
Phone +61 3 9562 7577
sales.vic@pertronic.com.au

Sydney
Unit 19
287 Victoria Rd
Rydalmere
NSW 2116
Phone +61 2 9638 7655
sales.nsw@pertronic.com.au

Brisbane
Unit 3
43-49 Sandgate Rd
Albion
QLD 4010
Phone +61 7 3255 2222
sales.qld@pertronic.com.au

Adelaide
65 Manton Street
Hindmarsh
SA 5007
Phone +61 8 8340 9533
sales.sa@pertronic.com.au

Perth
3/71 Beringarra Ave
Malaga
WA 6090
Phone +61 8 6555 3008
sales.wa@pertronic.com.au

www.pertronic.com.au