• **Melbourne**

Unit B2
2A Westall Rd
Springvale
VIC 3171
Tel (03) 9562 7577
sales.vic@pertronic.com.au

• **Sydney**

Unit 19
287 Victoria Rd
Rydalmere
NSW 2116
Tel (02) 9638 7655
sales.nsw@pertronic.com.au

• **Brisbane**

Unit 3
43-49 Sandgate Road
Albion
QLD 4010
Tel (07) 3255 2222
sales.qld@pertronic.com.au

• **Adelaide**

65 Manton St
Hindmarsh
SA 5007
Tel (08) 8340 9533
sales.sa@pertronic.com.au

• **Perth**

Unit 3
71 Beringarra Avenue
Malaga
WA 6090
Tel (08) 6555 3008
sales.wa@pertronic.com.au

www.pertronic.com.au

PERTRONIC
Evac Generator Module
EA and ET variants
TECHNICAL MANUAL
AUSTRALIA

Valid For:

PCB Hardware: v1.01 and greater

PCB Firmware: v1.6 and greater

Issue 2.3

The contents of this manual are copyright.

This document is to be used only for operating Pertronic Fire Alarm systems.

This document is not to be reproduced, photocopied or passed in part or whole to a third party without the express, written authorization of Pertronic Industries Pty Ltd

© Pertronic Industries Pty Ltd.

Acronyms:

BOWS	Building Occupant Warning System	
EOL	End of Line	End-of-Line termination: nominally 10kΩ Resistor, used to monitor the presence and integrity of the monitored circuit.
FIP	Fire Indicating Panel	
LED	Light Emitting Diode	
MCP	Manual Call-Point	
OC	Open-circuit	
PCB	Printed Circuit Board	
PTT	Press to Talk	
SC	Short-circuit	

CONTENTS

1. INTRODUCTION 1
   1.1. Functional Description 1
2. SPECIFICATIONS 2
   2.1. Access Points 4
3. SYSTEM FEATURES 5
4. LINE / MICROPHONE INPUTS 9
   4.1. Remote Pre-Amp Board 10
5. INSTALLATION 11
   5.1. Power Supply 11
   5.2. BELL Mode 11
   5.3. Input Operation: 13
   5.4. Isolation mode 14
   5.5. Bell Enable for Direct Inputs 14
   5.6. Basic Connection ‘Evacuation Only’ 15
   5.7. Spurred Speaker Connection ‘Evacuation Only’ 15
   5.8. Multiple Evac Generator Module Connection ‘Evacuation Only’ 16
   5.9. Tone Control Connection 16
   5.10. Tone Control Connection using External Power Supply 16
6. RS485 OPERATION: 17
   6.1. LDU Address 17
   6.2. LCD Address Mode option 17
   6.3. LED Address 18
   6.4. Standard RS485 Connection 19
7. PROGRAMMING: 20
   7.1. Factory Defaults and Voice Message 20
   7.2. Alternate Custom Tones 20
   7.3. Engineering Mode 22
8. FIRMWARE VARIANT: ‘EVACGM-ET’ 24
   8.1. Switch Control Mode Configuration 25
   8.2. Switch Control Mode Connection 26
9. EVAC GENERATOR MODULE FIRMWARE UPGRADE: 27
   9.1. FISP Programmer 27
10. PRODUCT CODES: 28

INDEX OF FIGURES

Figure 1.1: Evac Generator Module Layout 1
Figure 2.1: Tone Characteristics 2
Figure 2.2: PCB Layout 3
Figure 4.1: Microphone and Line Connection 9
Figure 4.2: Remote Pre-Amplifier Connection 10
Figure 5.1: BELL Mode 11
Figure 5.2: Tone Control Inputs 11
Figure 5.3: Basic Connection ‘Evacuation Only’ 15
Figure 5.4: Spurred Speaker Connection ‘Evacuation Only’ 15
Figure 5.5: Multiple Evac Generator Module Connection ‘Evacuation Only’ 16
Figure 5.6: Tone Control Connection 16
Figure 5.7: Tone Control Connection using External Power Supply 16
Figure 6.1: Standard RS485 Connection 19
Figure 8.1: Switch Control Mode Connection 26
Figure 9.1: FISP Programmer Window for Programming a Pertronic AVR Device 27

INDEX OF TABLES

Table 2-1: Access Points 4
Table 3-1: F100, F120A Evac Generator Module Fault Conditions 7
Table 3-2: F220A Evac Generated Module Faults 7
Table 4-1: Audio Input Operation 9
Table 4-2: Remote Pre-Amplifier Connections 10
Table 4-3: Remote Pre-Amplifier Jumpers 10
Table 5-1: Spurs 12
Table 5-2: Input Priorities 13
Table 5-3: Direct Input Mode (EA version) 14
Table 6-1: LED Addressing 18
Table 7-1: Custom Tone Selection 21
Table 7-2: LED Dials Input Selection 22
Table: 7-3: Engineer Mode Display 23
Table 8-1: Input Priorities (ET Version) 25
Table 8-2: Direct Input Mode (ET Version) 25
Table 10-1: Product Codes 28

1. INTRODUCTION

1.1. Functional Description

The Pertronic Evac Generator Module is one of a range of audio products manufactured by Pertronic Industries. It provides a simple solution for controlling third party amplifiers with Pertronic Fire Alarm panels.

The Evac Generator Module control and operation is based on the Pertronic popular 50W Amplifier. Two independent audio inputs, a FIP input, and clean contact Active and Fault relays have been added to further enhance the product.

To ensure integrity of operation during the 'Normal' and 'Alarm' states, the Evac Generator Module provides closed loop monitoring of the third party amplifier connected.

In the standby state the 100Vrms output line, is monitored for open-circuit and short-circuit faults.

The status of the Evac Generator Module is monitored by the inbuilt circuit and transmitted to the panel using the RS485 bus or Fault Relay.

- when not active, the Evac Generator Module draws a current of 32mA
- when active, the Evac Generator Module draws 105mA

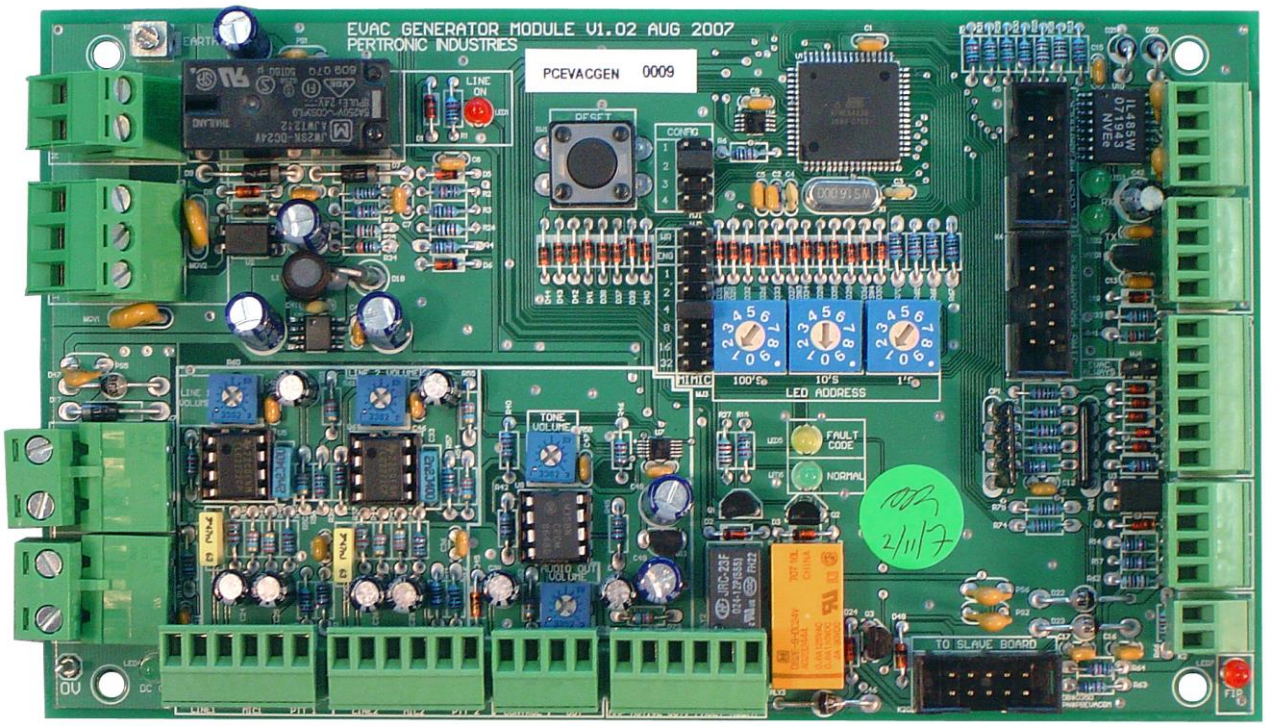

Figure 1.1: Evac Generator Module Layout

2. SPECIFICATIONS

Circuit Board:	Dimensions:	170 x 97 x 22	L x W x D (mm)
	Mounting Holes:	152.4 x 89	L x W (mm)
Electrical:	Operating voltage:	19 – 29 Vdc	nominal 27.4 Vdc
	Quiescent current	DC: 32 mA	RS485: < 30mA @ 27.4 Vdc
	Protection:	Reverse Voltage Protected	
Mic Inputs:	Sensitivity:	1.5 mVrms – 15 mVrms	
	Input Impedance:	680 ohm	
	Frequency Response:	100 Hz to 20 kHz	
	Balanced Input	- connect Shield to '**Line –**'	
Line Inputs:	Sensitivity:	100 mV–1.5 Vrms	
	Input Impedance:	68 kΩ	
	Frequency Response:	100 Hz to 20 kHz	
Audio Output:	Voltage:	1.5 Vrms (sine wave)	
100V Line Output:	Relay Switch rating:	5A at 100 Vrms	
	Monitoring:	Monitored for open-circuit or short-circuit (10 kΩ, 2 W EOL resistor)	
Fault Output:			
	Relay Rating:	2 A @ 30 V Clean Contact	
Active Output:			
	Relay Rating:	1 A @ 30 V Clean Contact	
FIP Input:	Monitoring:	10 kΩ 1/4 W EOL resistor Short to activate Open-circuit causes a fault	
Power Control Output:	FET Rating:	100 mA @ 27.4 V (33 V diode protected)	

Tones: 48 tones available including Evacuation, Alert tones and voice messages, as specified by AS2220 and ISO 8201- refer to Section 7.2: Alternate Custom Tones.
Programmed using the LED Base Address decade switches and program mini-jumpers

T3 and AS2220 Tone Characteristics:

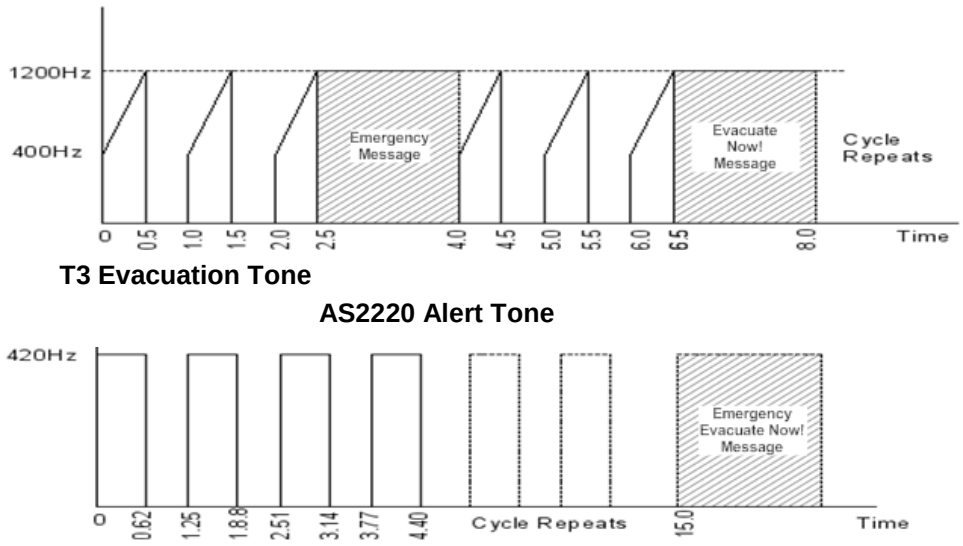

Figure 2.1: Tone Characteristics

PCB Layout

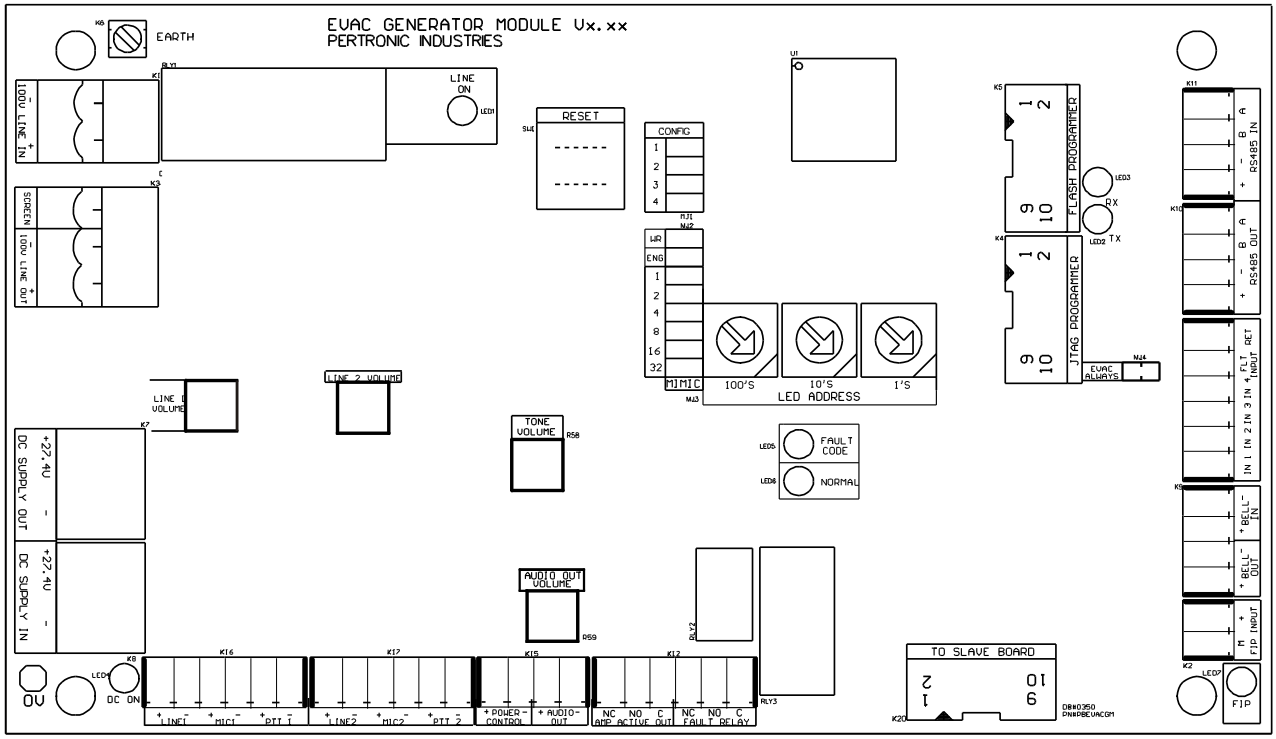

Figure 2.2: PCB Layout

2.1. Access Points

Connectors	
Component	**Description**
K1	100V Line In
K2	FIP Input
K3	100V Line Out
K7	DC Out
K8	DC In
K16	Line 1, Mic1, PPT1
K17	Line2, Mic2, PPT2
K15	Power Control, Audio Out
K12	Amp Active Out, Fault Relay
K9	BELL In/Out
K13	Tone Control
K10	RS485 Out
K11	RS485 In
K4	JTAG Programmer
K5	FLASH Programmer

LEDs		
Component	**Description**	**Colour**
LED 1	100V Line On	Red
LED 6	Normal / Fault Relay Active	Green
LED 5	Fault	Yellow
LED 2	RS485 Transmit	Green
LED 3	RS485 Receive	Green
LED 4	DC On	Green
LED 7	FIP On	Red

Jumpers	
Component	**Installed (or Enabled)**
MJ1	Disables ‘Amplifier Presence’ check
MJ2	Isolates Evac Gen when Direct Input 4 is active/asserted
MJ3	Enables ‘Class Change’ on Direct Input 3
MJ4	‘Bell Input’ must be active for Direct Inputs 1 to 4 to operate

Switches	
Component	**Description**
SW2	100’s
SW3	10’s
SW4	1’s

Trim Pots		
Component	**Description**	**Rating**
R51	Line 2 Volume Preset	10kΩ
R58	Tone Volume Preset	10kΩ
R59	Audio Out Volume Preset	10kΩ
R60	Line 1 Volume Preset	10kΩ

Table 2-1: Access Points

3. SYSTEM FEATURES

Operation:

Tones may be activated in four ways:
- activate the 'Bell In' input
- activate the FIP input
- activate one of the Tone inputs
- LED mapping via RS485

The tone generated depends on the input activated
- Bell Input activates Evacuation tone
- FIP Input activates Evacuation tone
- Input 1 activates Input 1 tone — default = Evacuation tone and voice
- Input 2 activates Input 2 tone — default = Alert tone and voice
- Input 3 activates Input 3 tone — default = Simulated Bell tone
- Input 4 activates Input 4 tone — default = Evacuation tone and voice

Refer to Table 5.2: Control Input Functions for the input priority structure

EVAC Always Link:

Evac Generator Module activates Evacuation tone when powered.
- it is recommended that this option is not used.

Line/Mic Inputs:

The Evac Generator Module has two Line/Mic inputs with 'Push To Talk' (PTT) switches for connection to a 'Fire and / or public address (PA) microphone.
- Line1/Mic1 - Fire Microphone
- Line2/Mic2 - Public Address microphone

- The Microphone input is balanced for maximum noise immunity. Earth the microphone cable shield to the 'Line –' terminal
- The Line Level input (100 mVrms) is provided for use of a pre-amplified signal eg. for use with a remote microphone, or in a noisy environment, etc

RS485 Operation:

The Evac Generator Module is addressed as a LED Mimic display:
Select Mimic address 1 - 8 using the mini-jumper Mimic Address links. If the address is set greater than 8, the Evac Generator Module will not respond to a poll from a connected panel, and will not send back fault information. The Evac Generator Module will however respond to the RS485 'Evacuate' and 'Warn System Isolate' commands.
Note: the Evac Generator Module is programmed as a LED Display Unit (LDU) on the **F100A** or **F120A** panel.
Set LED number 'n' on the rotary decade address switches for Evacuation operation:
F100A maximum address = 255 (251 being the maximum practical address)
F120A maximum address = 2048 (508 being the maximum practical address)
When activated:
LED 'n' activates Input 1 — default = Evacuation tone
LED 'n+1' activates Input 2 — default = Alert tone
LED 'n+2' activates Input 3 — default = Simulated Bell tone
LED 'n+3' activates Mic 1/Line 1
LED 'n+4' activates Mic 2/Line 2
Operation of 'Trial Evacuation' or 'Bells ON' at the panel activates the Tone 1 input: Evacuation Tone and Message.
Operation of 'BCO' or 'Warning System Isolate' at the panel silences the Evac Generator Module.

Config Links:

Config Link 1: - install to disable monitoring of the third party amplifier presence
Config Link 2: - determines the state of Input 3 and Input 4
Config link 3: - sets input 3 for School Bell (Class Change) mode. RS485 operation is not recommended in this mode
Config Link 4 is installed when Bell Input must be active for operation of direct inputs 1-4

Input 4: **Config Link 2 removed:**

Normal Mode (Warn Sys On Input): When Input 4 is active, Input 1 tone is generated (default Evacuation tone). Refer to

Config Link 2 fitted:

Evac Generator Module Disable Mode: When Input 4 is active, the Evac Generator Module is disabled. i.e. activation via the RS485 or Inputs is ignored. See Section 8: FIRMWARE VARIANT: 'EVACGM-ET' for further details.

Power Control: Operates when the third party amplifier is supplied with an audio signal

Output Active: Operates when the Tone Generator 100V line output is active

Fault: Notification of faults can be transmitted to the fire panel in three ways:

Conditions:

- a fault message via the RS485 bus
- unbalancing the panel BELL circuit, causes a 'BELL' fault at the panel
  - a 10kΩ, ¼ W EOL resistor is used as the End-of-Line device
- changing of the fault relay contacts

The Evac Generator Module monitors nine faults

(i) DC Power Off-Normal: the PSU voltage is outside the operating voltage range of the Evac Generator Module. Normal operating range: 19Vdc < PSU < 28.6Vdc

The Evac Generator Module output shuts down when the DC Supply is outside the normal range

(ii) Amplifier Output Low: when the amplifier is activated, the Evac Generator Module monitors the 100Vrms output level - if the output is low, a fault is generated. Monitoring is disabled when the microphone or line inputs are activated.

(iii) 100V, 10kΩ EOL fault: Speaker Circuit wiring fault (open)

(iv) 100V, 10kΩ EOL fault: Speaker Circuit wiring fault (short)

(v) RS485 Communication fault:
- RS485 wiring fault
- incorrect RS485 LED Mimic Address
- incorrect panel mimic programming
- LED Base Address set to 0

(vi) Amplifier Monitor Fault: the third party amplifier is not connected or not operating correctly. This mode is disabled when Config Link 1 is fitted

(vii) Fault Input Active: The fault input is activated

(viii) FIP Input Fault: FIP wiring fault. An open circuit has occurred, or the 10kΩ EOL has been removed

(ix) Evac Generator Module Disabled. Config Link 2 is installed and Input 4 is active

Total failure of the Evac Generator Module DC Supply is monitored by the panel

Faults are reported to the panel as shown in Table 3.1

Fault	Bell Circuit Monitor	RS485 Message (e.g. F100)	Fault LED
DC Power Supply Missing	EOL clamped to 5kΩ	LED Mimic/Amp xx Missing	OFF
DC Power Supply 'Off Normal'	EOL clamped to 5kΩ	LED Mimic/Amp xx Int.Flt	1st Flash Long
Amplifier Output Low or Overload Fault	EOL clamped to 5kΩ	LED Mimic/Amp xx Int.Flt	2nd Flash Long
100V Line Out 10kΩ EOL Open Circuit Fault	EOL clamped to 5kΩ	LED Mimic/Amp xx Fault.	3rd Flash Long
100V Line Out 10kΩ EOL Short Circuit Fault	EOL clamped to 5kΩ	LED Mimic/Amp xx Fault.	4th Flash Long
RS485 Communication Fault	EOL clamped to 5kΩ	LED Mimic/Amp xx Missing	5th Flash Long
Amplifier Monitor Fault	EOL clamped to 5kΩ	LED Mimic/Amp xx Int.Flt	6th Flash Long
Fault Input Activation	EOL clamped to 5kΩ	LED Mimic/Amp xx Int.Flt	7th Flash Long
FIP Input Fault	EOL clamped to 5kΩ	LED Mimic/Amp xx Int.Flt	8th Flash Long
Evac Generator Module Disabled	EOL clamped to 5kΩ	LED Mimic/Amp xx Int.Flt	9th Flash Long
DC Power Supply 'Off Normal' History	Normal	Normal	10th Flash Long
Amplifier Output Low or Overload Fault History	Normal	Normal	11th Flash Long
100VLine Out 10kΩ EOL Open Circuit History	Normal	Normal	12th Flash Long
100VLine Out 10kΩ EOL Short Circuit History	Normal	Normal	13th Flash Long
RS485 Communication Fault History	Normal	Normal	14th Flash Long
Amplifier Monitor Fault History	Normal	Normal	15th Flash Long
Fault Input Activation History	Normal	Normal	16th Flash Long
FIP Input Fault History	Normal	Normal	17th Flash Long
Not Applicable.	Normal	Normal	18th Flash Short

Table 3-1: F100, F120A Evac Generator Module Fault Conditions

Defect	Location	RS485 Fault Message
DC Power Supply Missing	LED Mimic/WarnSys n	Timeout
DC Power Supply 'Off Normal'	LED Mimic/WarnSys n	Display Fault
Amplifier Output Low or Overload	LED Mimic/WarnSys n	Aux Fault I/P
100V Line Out EOL Open Circuit	LED Mimic/WarnSys n	Aux Fault I/P
100V Line Out EOL Short Circuit	LED Mimic/WarnSys n	Aux Fault I/P
RS485 Communication Fault	LED Mimic/WarnSys n	Timeout
Amplifier Monitor Fault	LED Mimic/WarnSys n	Aux Fault I/P
Fault Input Activation	LED Mimic/WarnSys n	Aux Fault I/P
FIP Input O/C	LED Mimic/WarnSys n	Aux Fault I/P
Evac Generator Module Disabled	LED Mimic/WarnSys n	Timeout

Table 3-2: F220A Evac Generated Module Faults

To clear a latched Fault History indication, briefly press the Reset button.

Indicators:

DC ON LED:	LED4	Green	- turns ON when power is supplied to the Evac Generator Module
Fault LED:	LED5	Yellow	- flashes when there is a Fault

RX LED:	LED3	Green	- turns ON when the Evac Generator Module is polled via the RS485
TX LED:	LED2	Green	- turns ON when the Evac Generator Module responds via the RS485
Line On LED:	LED1	Red	- turns ON when the Evac Generator Modules 100Vrms line is activated
Normal LED:	LED6	Green	- normally ON, turns OFF when there is a Fault
FIP LED:	LED7	Red	- turns ON when the FIP input is activated

Voice Messages

Evacuation: **‘**Emergency, Evacuate Now’

Alert*: **‘**Warning, the fire alarm system has operated, stand by for further instructions'

Test:** “Your attention please! This is a test of the building evacuation system"

* The Alert message is only available using EVACGM-EA Firmware

**The Test tone is only available using EVACGM-ET Firmware

Custom Messages

The ‘Evacuation’ and ‘Alert’ messages may be replaced by customer-defined messages, upon request.

Customer-defined messages are recorded by Pertronic Industries, and embedded within the Evac Generator Module Flash memory. Alert messages are limited to four seconds maximum in length (hardware v1.02), or a maximum of 20 seconds (hardware v1.03). Evac messages are limited to one and a half seconds if using the T3 tone and 4 seconds if using the AS2220 tone.
Please contact Pertronic Industries for further information and costing.

4. LINE / MICROPHONE INPUTS

The Evac Generator Module provides two independent Line / Mic inputs with 'Push To Talk' (PTT) control, for connection to either an external microphone or line level signal source. The inputs can also be activated from the RS485 by mapping to Base LED n+3 and Base LED n+4. See Section 6.2 for more information.

Operation of each audio input differs, depending on the state of the Evac Generator Module.

- Audio Input 1 (Mic1 / Line 1) operates as a Fire Microphone input
- Audio Input 2 (Mic2 / Line 2) operates as a PA Microphone input

The Fire Microphone is enabled during both 'Normal' and 'Alarm' states, while the PA Microphone is disabled during the 'Alarm' state - refer to Table 4.1.

If both inputs are activated simultaneously during the 'Normal' state, the Fire Microphone takes priority.

Dedicated control potentiometers provide signal level adjustment for each Line / MIC input and the Evac Generator audio output.

Operation	Normal	Alarm
Line 1 (Fire)	Enabled*	Enabled
Line 2 (PA)	Enabled	Disabled

*The Fire Line / Microphone input overrides generated tones.

Table 4-1: Audio Input Operation

Connection:

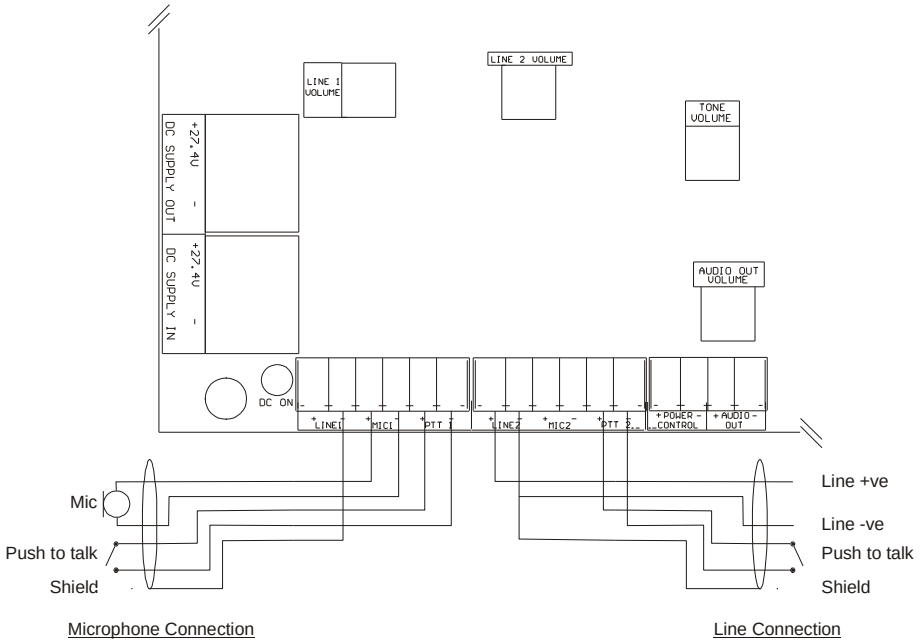

Figure 4.1: Microphone and Line Connection

Specifications:

Microphone Input	Balanced – terminate Shield to 'Line –' terminal
Microphone Input Sensitivity:	1.5 mVrms - 15 mVrms
Microphone Input Impedance:	680 Ω
Line Input Sensitivity:	100 mV – 1.5 Vrms
Line Input Impedance:	68 kΩ
Frequency Response:	100 Hz to 20 KHz
Current Consumption:	< 1mA
Recommended Cable:	0.2 mm^2 4-core twisted wire shielded audio cable
Maximum Length:	5 metres maximum
Maximum Daisy Chained Mic Inputs:	4
Maximum Daisy Chained Line inputs:	10
Audio Output:	1 Vrms

4.1. Remote Pre-Amp Board

The Redback A2055A Pre-amplifier module (PREAMP-RB) may be used to boost the input level to the Evac Generator Module in situations where the microphone is connected at distances too great to operate at microphone level input or where the microphone input is feeding more than four (4) Evac Generator Modules.
The Redback A2055A Pre-amplifier contains a selectable balanced / unbalanced microphone input, and two auxiliary inputs.
The Redback pre-amplifier output may be connected directly into the Evac Generator Module 'LINE' input.
The Redback pre-amplifier may be powered from the panel 24Vdc monitored supply, or a remote 15Vdc to 30Vdc supply. It is recommended that the panel supply be used as this is monitored.

4.1.1. Installation

Connections

Desktop Microphone	Fist Microphone	Redback A2055A Pre-Amp	Evac Generator Module	Power Supply
3 Microphone +ve	2 Microphone +ve	MIC +ve		
2 Microphone -ve	3 Microphone -ve	MIC -ve		
1 Microphone Shield	1 Microphone Shield	GND		
4 PTT +ve	5 PTT +ve		PTT +	
5 PTT –ve	4 PTT –ve		PTT -	
		Output +ve	LINE +	
		Output 0V	LINE -	
		Mic Cable Shield	LINE -	
		Power +		+24 Vdc
		Power 0V		0 V
		Power -		

Table 4-2: Remote Pre-Amplifier Connections

Note: "PTT -ve" may be linked to the "Microphone Shield" inside the microphone.

DIP Switch Settings

Switch	Setting	Selected function
SW1	OFF	Balanced microphone
SW2	OFF	No phantom power for the microphone.
SW3	OFF	Not used
SW4	OFF	Single rail dc supply

Table 4-3: Remote Pre-Amplifier Jumpers

Failure to connect the Microphone Shield may reduce the quality of the signal received by the Evac Generator Module, however the shield must not be connected to panel Earth because Earth Leakage currents caused may also impact on the quality of the signal received.

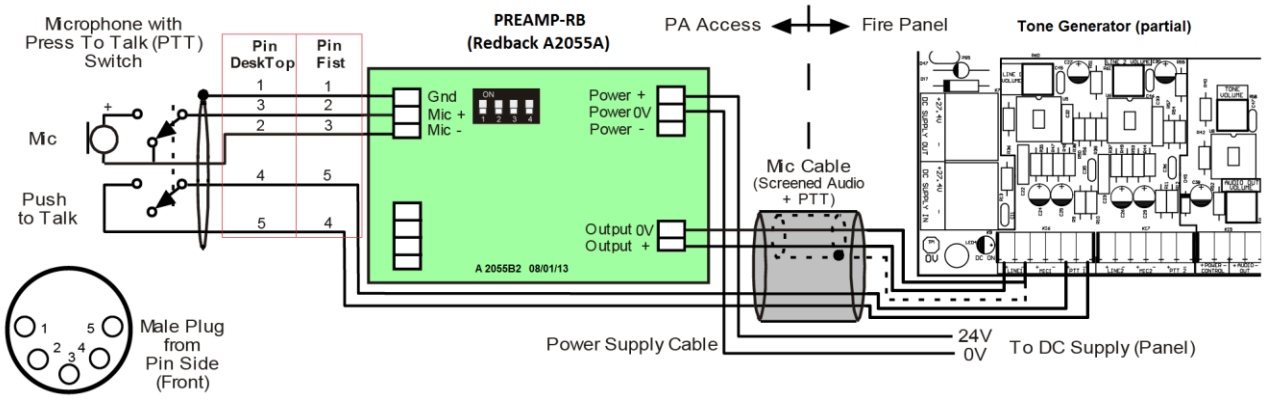

Figure 4.2: Remote Pre-Amplifier Connection

5. INSTALLATION

5.1. Power Supply

The Evac Generator Module connects to the panel supply via the 'DC IN' connector located at the bottom left of the board. The 'DC OUT' connector may be used to supply power to additional Evac Generator Modules. The DC supply must be connected at all times to enable the Evac Generator Module to monitor the connected amplifier and 100Vrms line output. The panel battery or separate supply must be capable of delivering the maximum current when the amplifier is fully loaded and active.
The panel BELL circuit is isolated and cannot be used to provide power to the Evac Generator Module, therefore it is used only for Evac Generator Module activation and monitoring.

5.2. BELL Mode

The BELL circuit is used to activate the Evac Generator Module into Evacuation mode when positive BELL polarity is applied to its inputs.

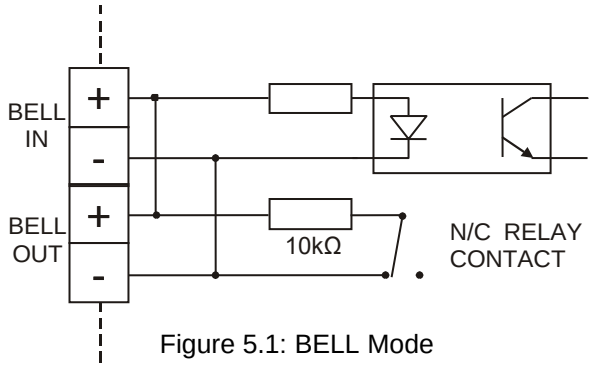

Figure 5.1: BELL Mode

5.2.1. Tone Control Inputs

Four inputs are provided for tone selection. Inputs are active low; so must be pulled low (0V) to operate.
- all inputs activate the Evac Generator Module independently and operate in a priority structure.

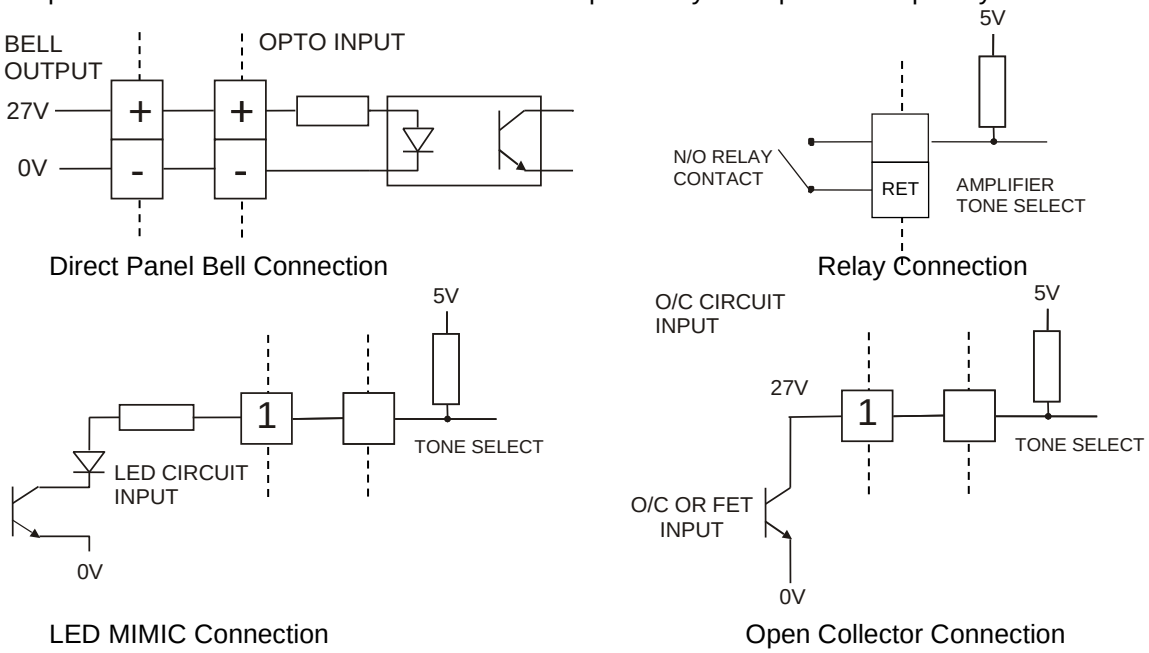

Figure 5.2: Tone Control Inputs

When the Evac Generator Module is powered from an isolated external power supply, the 'Relay Connection' method is recommended to maintain isolation from the Fire Panel supply.

5.2.2. FIP Input

The FIP Input is provided for connection to a third Party fire panel. The third party fire panel must be interfaced to the FIP via a relay contact to ensure electrical isolation between the equipment.

In the ‘Normal’ state the input is monitored by a 10kΩ EOL resistor. If an open-circuit occurs on the FIP input, the Evac Generator Module signals a fault. A short-circuit on the input activates the Evac Generator Module into ‘Evacuation’ mode.

5.2.3. Fault Input

The Fault input is provided to monitor the fault status of auxiliary equipment, such as power supplies.
To activate the fault input, the “DEF INPUT” is connected to the ‘RET’ Terminal, using relay contacts.

5.2.4. Connection to Third Party Amplifier

The Evac Generator Module ‘AUDIO OUT’ terminals ‘+ and ‘-‘ connect to the ‘+’ and ‘-‘ audio inputs on the third party amplifier. Do not use the third party amplifier 0V terminal for audio –ve connection, as this may reduce the system audio quality.
The third party amplifier ‘100V LINE OUTPUT’ terminals ‘+’ and ‘-‘, connect to the Evac Generator Module ‘100V LINE IN’ ‘+’ and ‘-‘ terminals. This enables the generator to monitor the output of the amplifier by passing a low level tone through the amplifier without switching it through to the speaker circuit. Connecting speakers directly to the amplifier will result in low level tones being audible every 55s or so. This also means that only one amplifier can be connected to a single tone generator.
Normally the third party amplifier DC supply is directly connected to the BOWS power supply and is continually powered. To reduce standby current, the Evac Generator Module provides a ‘POWER CONTROL’ output for connection to an external relay, which can be used to automatically turn the amplifier ON when required.

5.2.5. 100V Line Output

In the ‘Normal’ state, the Evac Generator Module monitors the 100V line using a 10kΩ, 2W EOL resistor.
In the ‘Alarm’ state, the Evac Generator Module disconnects the EOL monitoring circuit and provides a 100Vrms tone and message on the loudspeaker circuit.
In the ‘Alarm’ state, the generator is monitored for overload conditions but 10kΩ EOL monitoring ceases. Note that the EOL resistor is still in-circuit and loads the line, its presence is simply not monitored.

The 100Vrms Line may be spurred, provided there is no more than a maximum of three spurs. If spurred, the EOL Resistor value at the end of each spur must be changed to provide the correct monitoring to the amplifier - refer to Table 5.1.

Number of Spurs	EOL Resistor Value for Each Spur
1	1x 10kΩ, 2W
2	1x 22kΩ, 1W on each spur
3	1x 33kΩ, 1W on each spur

Table 5-1: Spurs

PA Speakers used with the Evac Generator Module must be capacitively-coupled and rated to 100Vrms. The capacitor must be bipolar and able to withstand 200V peak line voltage. The value should be approximately 1µF per watt of power for each speaker.

A common problem of 100V line PA installations is the coupling of unwanted noise into the 100V line. Although the generator has been designed to reduce the effects of coupled noise, it is recommended practice that all 100V line wiring be separated from ALL OTHER wiring by at least 250mm. This includes Mains wiring, ELV wiring, Loop wiring and telephone wiring.

5.2.6. Amplifier Monitoring

Every 55 seconds the Evac Gen monitors that a test signal is present at the output of the external amplifier and generates a defect when the signal is not detected.

To disable this function fit **CONFIG Link 1**.

5.3. Input Operation:

The Evac Generator Modules 'BELL IN' terminals '+' and '-' connect to the corresponding '+' and '-' terminals on the Fire Alarm Panel. The 'BELL OUT' terminal may be used to daisy-chain Evac Generator Modules together.

If multiple inputs are triggered simultaneously, then the tone with the highest priority is produced - refer to Table 5.2.

	Input	Priority	Mode	Warn Sys Iso ON
Direct Inputs	Input 4 (Isolate mode)	1*	Evac Gen Isolated	
	FIRE MIC	2	FIRE MIC mode	
	Bell Input (only)	3	EVAC	
	FIP input	3	EVAC	
	Input 1	3	EVAC	
	Input 4 (Warn sys on)	4	EVAC	NO TONE
	Input 2	5	ALERT	
	Input 3	6	CUSTOM	
	Input 3 (class change)	7	Edge triggered CUSTOM	
	PA MIC	8	PA MIC mode	
Automatic Inputs	Fire MIC LED 'n+3'	9	FIRE MIC mode	
	LED 'n'	10	EVAC	
	Panel Warn Sys ON (RS 485 command)	10	EVAC	NO TONE
	LED 'n+1'	11	ALERT	NO TONE
	LED 'n+2'	12	CUSTOM	
	LED 'n+2' (class change)	12+	CLASS Change	
	PA MIC LED 'n+4'	13	PA MIC mode	

Table 5-2: Input Priorities

(*remains isolated until Input 4 is deactivated)

(+ class change operates irrespective of the state of Warn Sys Iso)

NOTE: Direct Input activations ALWAYS override automatic activations

Active Input	Bells Enable Link Out	Bell Enable Link In	
		Bells ON	Bells OFF
Bell Input	EVAC	No Tone	No Tone
Input 1	EVAC	EVAC	No Tone
Input 2	ALERT	ALERT	No Tone
Input 3	CUSTOM	CUSTOM	No Tone
Input 3 (Class Change)	Edge Triggered CUSTOM		
Input 4	EVAC		
Input 4 (ET link fitted)	EVAC Gen Isolated		
FIP	EVAC		

Table 5-3: Direct Input Mode (EA version)

5.4. Isolation mode

The Evac Gen can be configured to have the activation of direct input 4 isolate the unit. The Evac Gen will remain isolated until Input 4 is de-activated. Fit **CONFIG Link 2** for Tone Gen Isolation Mode.

5.5. Bell Enable for Direct Inputs

Fit **CONFIG Link 4** if the Bell Input must be active for any of the Direct Inputs to activate.

5.6. Basic Connection ‘Evacuation Only’

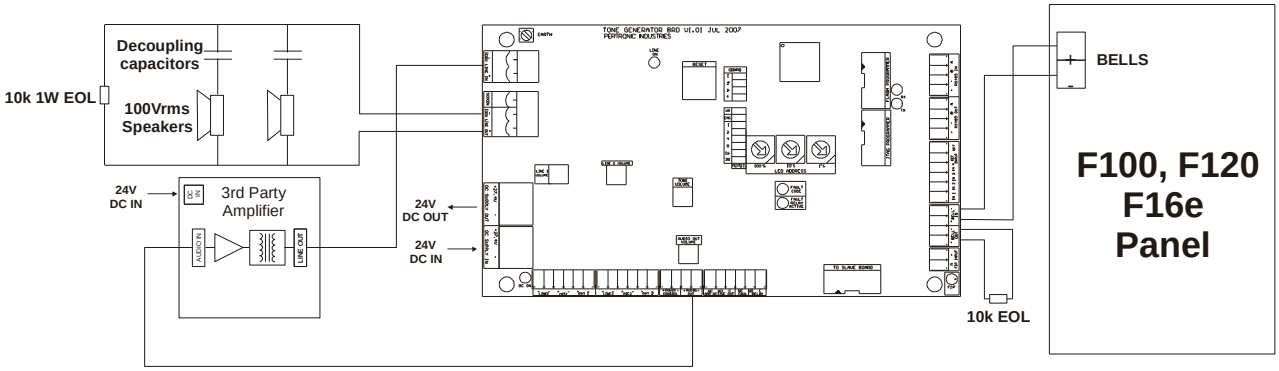

Figure 5.3: Basic Connection ‘Evacuation Only’

5.7. Spurred Speaker Connection ‘Evacuation Only’

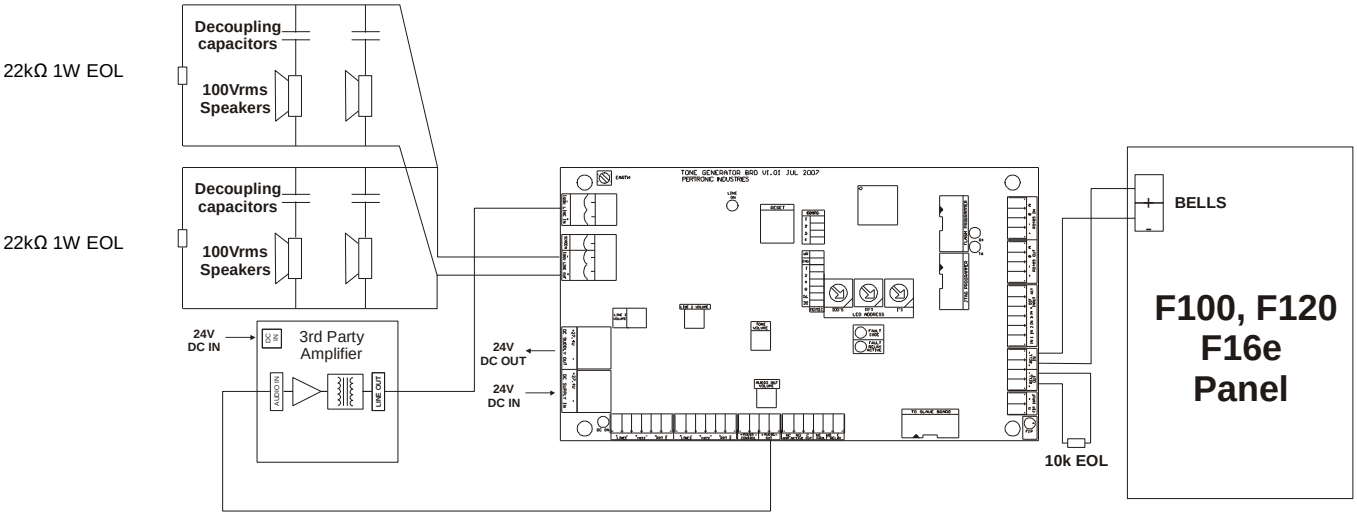

Figure 5.4: Spurred Speaker Connection ‘Evacuation Only’

5.8. Multiple Evac Generator Module Connection 'Evacuation Only'

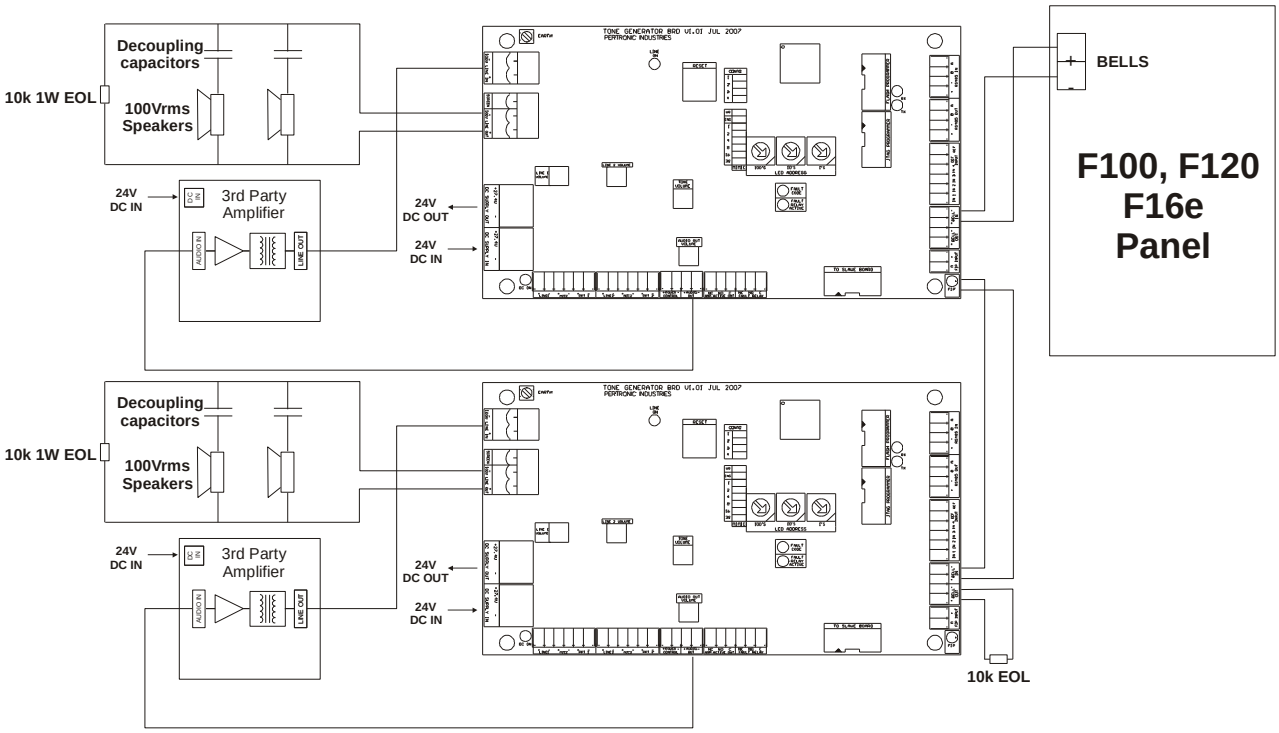

Figure 5.5: Multiple Evac Generator Module Connection 'Evacuation Only'

5.9. Tone Control Connection

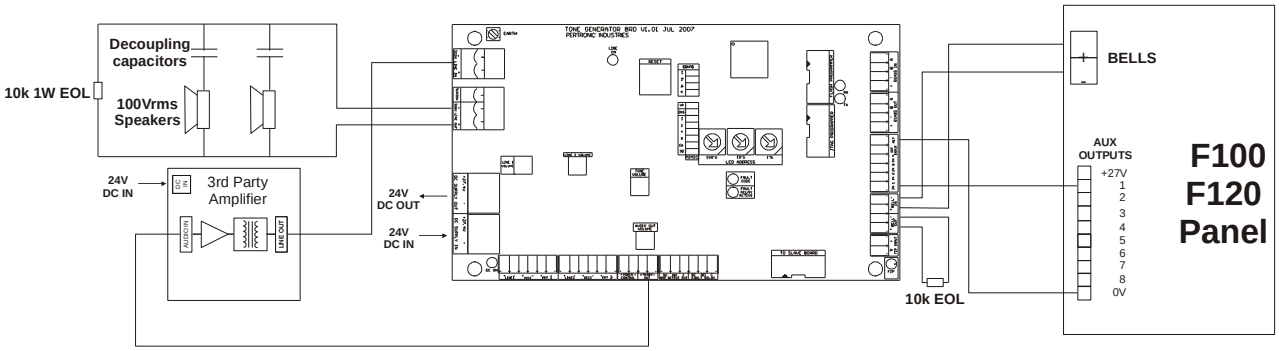

Figure 5.6: Tone Control Connection

5.10. Tone Control Connection using External Power Supply

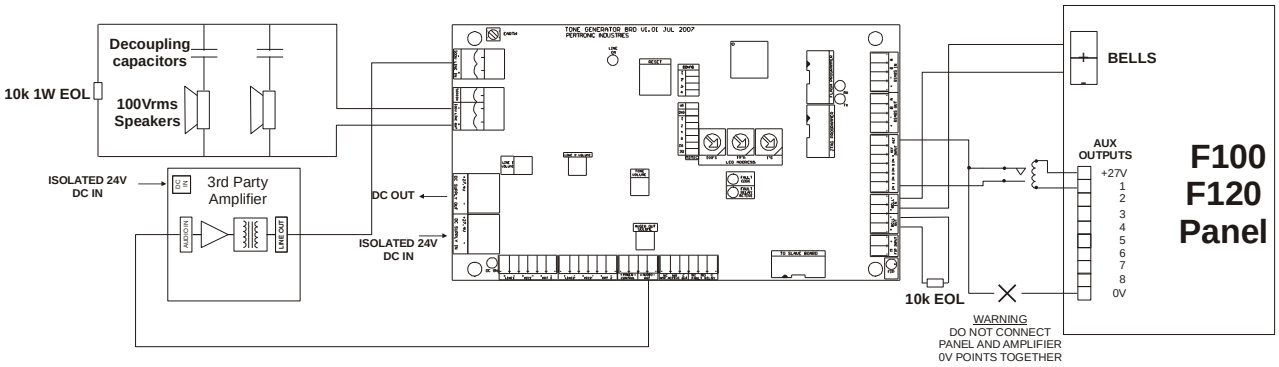

Figure 5.7: Tone Control Connection using External Power Supply

6. RS485 OPERATION:

The Evac Generator Module can be fully controlled from a **Pertronic F120A** or **F100A** RS485 connection, removing the need for separate 'BELL IN' and tone control wiring. The Evac Generator Module RS485 driver is isolated, reducing the risk of fault currents and overloading the RS485 if the power supply is wired incorrectly.
Note: the Panel RS485 connection cannot be used to power the Evac Generator Module.

6.1. LDU Address

Evac Generator Modules operate on the RS485 bus as discrete devices, with each generator given a unique address. The address links (1,2,4 and 8) are selected for addresses 1 to 8. The generator is configured in the panel as a LED Mimic.
Each device is daisy-chained to the panel RS485 using the 'RS485 In' and 'RS485 Out' terminals.
Up to 8 RS485 LED type devices (LED Mimic, Pertronic 50W Amplifiers, Pertronic Evac Generator Modules etc) may be connected to the RS485 bus and the panel monitors the number of polled devices connected, reporting a Fault condition if the number is not correct.
If the address is set greater than 8, the Evac Generator Module will not respond to a poll from a connected panel, and will not return fault information. The Evac Generator Module will however respond to the RS485 'Evacuate' and 'Warn System Isolate' commands.

6.2. LCD Address Mode option

If a panel is required to monitor more devices than it is normally capable of, the **LCD Address mode** can be enabled. LCD Address mode changes how the Evac Gen appears to the F100/F120 Fire Panel RS485 bus: instead of appearing as an LED mimic, the Evac Gen will appear as and will respond as an LCD mimic. This allows more devices to be simultaneously connected and monitored. With this mode enabled, the Evac Gen reports defects by simply not responding to LCD mimic polls. The Evac Gen supports F120/F100 LCD mimics. LCD Address mode is enabled by fitting a link in **Mimic Address jumper position 32**. With this link NOT fitted, the standard LED mimic operation applies. When using the LCD Address mode, the number of devices that can be connected to a panel using the LCD Address mode is determined by the panel, currently 8 for the F100A and 29 for the F120A.

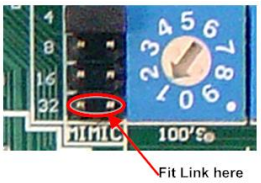

6.3. LED Address

Each Evac Generator Module has three decade switches for selecting the Base LED address to activate the device.
Three sequential LED numbers select the tone to be produced on activation - refer to Table 6.1.

LED Number	Input	Default Tone Generated / Input Selected (EA version)
Base LED address	Input 1	Tone 05: T3 tone followed by voice
Base LED address +1	Input 2	Tone 03: Alert tone followed by voice
Base LED address +2	Input 3	Tone 07: Simulated Bells
Base LED address +3	Line 1 / Mic 1	Line 1 / Mic 1 Input activated
Base LED address +4	Line 2 / Mic 2	Line 2 / Mic 2 Input activated
Panel 'Warn System' ON	Input 4	Tone 05: T3 tone followed by voice

Table 6-1: LED Addressing

A single LED base address may be used for different Evac Generator Modules when common activation is required, however care must be taken to avoid address overlap where Evac Generator Modules are required to activate separately.

The **F100A** can control up to 255 LED addresses and the **F120A** can address up to 2048 LED addresses, with the Evac Generator (recognizing 512 as the highest LED address) it should not be set for a maximum LED base address higher than 508 for the F120 in order to have full control of all amplifier outputs. While the **F16e** has an RS485 bus, the firmware does not provide control of the Evac Generator Module.
For large systems it is suggested that a LED address region be reserved for amplifier control, e.g. LED Addresses between 101 and 199 are for amplifier use only.

6.4. Standard RS485 Connection

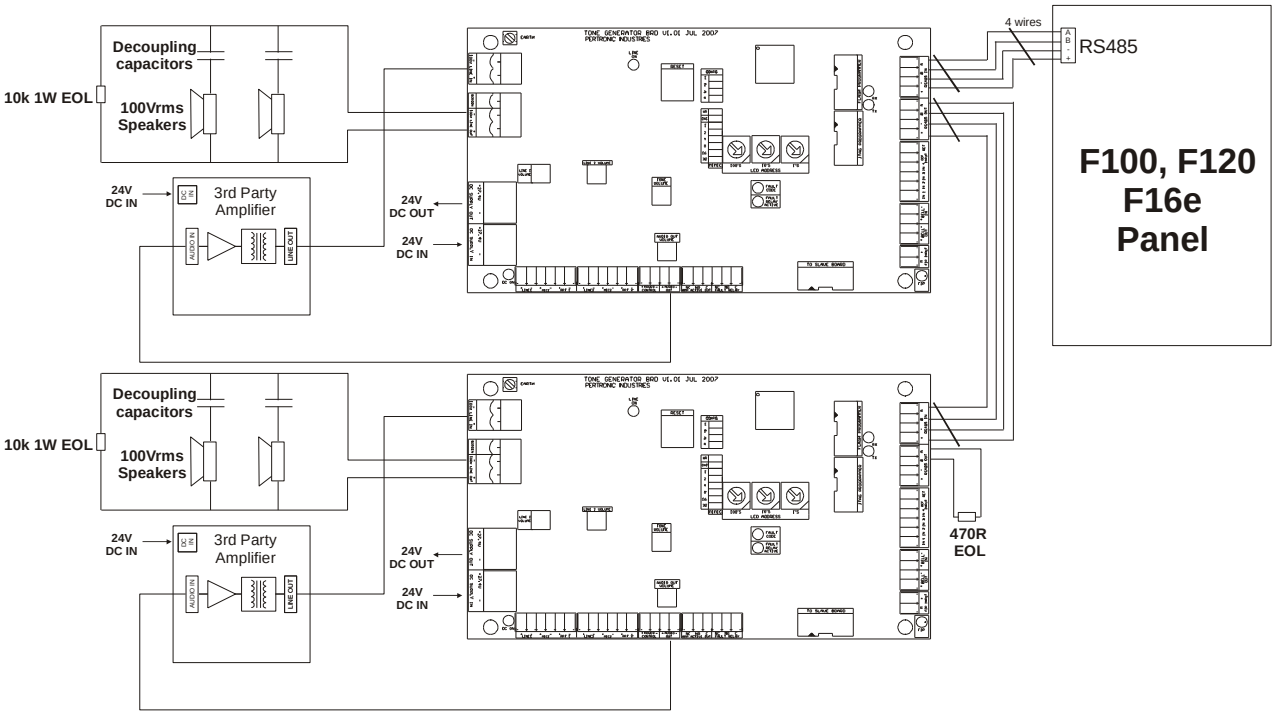

Figure 6.1: Standard RS485 Connection

7. PROGRAMMING:

7.1. Factory Defaults and Voice Message

By default, the Evac Generator Module is configured for standard T3 Tone, Alert, Simulated bells and applicable messages. Pertronic Industries has adopted the following default configurations:

EA Version:

Input 1: Evacuate Input	Tone 5: T3 Cadence followed by Evacuation message.
Input 2: Alert Input	Tone 3: 420Hz 0.625 sec ON, 0.5 sec OFF - Intermittent Alert Tone followed by Alert message.
Input 3: Custom Input	Tone 7: Simulated Bells.
Input 4: Evacuate Input	Tone 5: T3 Cadence followed by Evacuation message.

ET Version:

Input 1: Evacuate Input	Tone 5: T3 Cadence followed by Evacuation message.
Input 2: Alert Input	Tone 4: 420Hz 0.625 sec ON, 0.5 sec OFF - Intermittent Alert Tone Only.
Input 3: Test Mode OFF	Tone 7: Simulated Bells.
Test Mode ON	Tone 43: Test Message followed by T3 Evac Tone. - T3 style sweep continuous in EVACGM-EA firmware.
Input 4: Test Mode OFF	Tone 5: T3 tone followed by Voice when not RS485 connected.
Test Mode ON	Evac Generator Module disabled.

Default Voice messages for the Evac and Alert Tones:

Evacuation Message:	‘Emergency’, and ‘Evacuate Now’ between alternate sweeps of the T3 tone
Alert Message (EA only):	‘Warning, the Fire Alarm system has operated; stand by for further instructions'
Test Message (ET only):	‘Your attention please! This is a test of the building evacuation system’

7.2. Alternate Custom Tones

The tones generated may be changed to any of 48 pre-programmed tones. These tones are common to both direct input and RS485 trigger modes. See Table 7.1 for the list of available tones.
The Evac Generator Module configuration is stored in E^2PROM and is retained in the event of power failure.

Please see table 7.2 below for the selection of available tones

Tone	100s Dial	10s Dial	Tone	Factory Default Input Programming			
				I/P	EA Version	I/P	ET Version
00	0	0	Tone Programming Test - 1's Dial plays current programmed tone.				
01	0	1	500-1200Hz 3.75 sec / 0.25sec. AS2220 Evacuation Tone followed by 2x EVAC message				
02	0	2	500-1200Hz 3.75 sec / 0.25sec. AS2220 Evacuation Tone Only				
03	0	3	420Hz 0.625 sec ON, 0.5 sec OFF – Intermittent Alert Tone followed by Alert message (Note: Alert message replaced by EVAC message in EVACGM-ET firmware)	2	Alert		
04	0	4	420Hz 0.625 sec ON, 0.5 sec OFF – Intermittent Alert Tone Only			2	Alert
05	0	5	T3 Cadence then 'Emergency' then T3 cadence then 'Evacuate now' all repeated	1 or 4	Evac	1 4	Evac Test Mode OFF
06	0	6	T3 Cadence Only (no voice message)				
07	0	7	Simulated Bells	3		3	Test Mode OFF
08	0	8	PA400 Tone				
09	0	9	Simulated Bells				
10	1	0	400- 700Hz 1.5 sec Whoop				
11	1	1	800 / 1000Hz @ 1 Hz - Sweeping				
12	1	2	400 / 450Hz @ 0.5Hz Tone.				
13	1	3	2400 / 2900Hz @ 7Hz - Sweeping				
14	1	4	2400 / 2900Hz @ 1Hz - Sweeping				
15	1	5	500 / 1200Hz @ 1Hz - Sweeping				
16	1	6	1200 / 500Hz @ 1Hz - DIN / PFEER Prepare to Abandon Platform				
17	1	7	2400 / 2900Hz @ 2 Hz - Alternating				
18	1	8	1000 Hz @ 1Hz - Intermittent				
19	1	9	800 / 1000Hz @ 0.875Hz - Alternating				
20	2	0	2400Hz @ 1Hz Intermittent				
21	2	1	800Hz 0.25 sec ON, 1 sec OFF - Intermittent				
22	2	2	800Hz – Continuous				
23	2	3	660Hz 150mS ON, 150mS OFF - Intermittent				
24	2	4	544Hz (100mS) / 440 Hz (400mS) - NF S 32-001				
25	2	5	660Hz 1.8 seconds ON, 1.8 seconds OFF - Intermittent				
26	2	6	1.4kHz-1.6kHz, 2Hz				
27	2	7	660Hz - Continuous				
28	2	8	544Hz / 440Hz @ 1Hz - Alternating				
29	2	9	544Hz @ 0.875 seconds - Intermittent				
30	3	0	800Hz @ 2Hz - Intermittent				
31	3	1	800 / 1000Hz @ 25Hz - Sweeping				
32	3	2	2400 / 2900Hz @ 25Hz - Sweeping				
33	3	3	554Hz - Continuous				
34	3	4	440Hz - Continuous				
35	3	5	800 / 1000Hz @ 7Hz - Sweeping				
36	3	6	660 / 1200Hz @ 2.5 Hz - Sweeping				
37	3	7	1000/650Hz Two-Tone Chime.				
38	3	8	745Hz @ 1Hz Intermittent				
39	3	9	1000 & 2000Hz @ 0.5 sec Alternating				
40	4	0	1000Hz Continuous - PFEER Toxic Gas				
41	4	1	2000Hz Continuous				
42	4	2	1200Hz Continuous				
43	4	3	800Hz / 1Khz @ 250mS Alternating				
44	4	4	500-1400Hz Sweep				
45	4	5	SOS' in Morse code				
46	4	6	Test Message followed by T3 Evac Tone (T3 style sweep continuous in EVACGM-EA firmware)			3	Test Mode ON
47	4	7	Test message followed by AS2220 Evac tone (same as tone 2, in EVACGM-EA firmware)			3	Test Mode ON
48	4	8	590 Hz @100mS on/100mS off				

Table 7-1: Custom Tone Selection

7.3. Engineering Mode

To listen to the current tones, set all of the dials to 0, then insert both programming links 'ENG' and 'WR'. The Evac Generator Module enters demo mode after 5 seconds. Select the required input using the 1's dial. In 'Engineering Mode', the Evac Generator Module signals a fault to the panel via the BELL OUT and RS485 bus. This fault remains while the programmer link is installed and must be removed for the generator to return to Normal.

Caution: After programming, do NOT to leave the Evac Generator Module with an invalid LED address.

To amend the configuration:

(i) fit link 'ENG' to access 'Engineering Mode'.

(ii) the Evac Generator Module has 3 decade switches labelled 1's, 10's, and 100's.
In engineering mode, these dials have a dual purpose;
- select which input to program.
- select the mode in which Input 3 operates.

(iii) select the input to be amended by switching Dial 1's to the relevant setting as indicated in Table 6.2:
- 1 for Input 1
- 2 for Input 2
- 3 for Input 3
- 4 for Input 4 (Note: Input 4 = Input 1 when RS485 connected, but maybe programmed for unique tone when not RS485 connected).

(iv) switch Dials 10's and 100's to select one of the 48 available tones – refer to Table 7-1: Custom Tone Selection
eg. to change Input 3 to 440Hz continuous – Tone 34

- set Dial 1's:	3	- selects Tone 3
- set Dial 10's:	4	- selects Tone: digits = 4
- set Dial 100's:	3	- selects Tone: tens = 3

(v) momentarily short link 'WR'

(vi) to check the input has been amended as required, fit link 'WR' – Tone 3 will sound after 5 seconds.

Dial 1's Position	Assignment	Description
0	Restore defaults	Set Dials 10's and 100's 9 (99).
1	Input 1 Tone Select Default = Evacuation (Tone 05)	Use Dials 10's and 100's to select tone from Table 7.1
2	Input 2 Tone Select Default = Alert (Tone 03)	Use Dials 10's and 100's to select tone from Table 7.1
3	Input 3 Tone Select (Link 2 OUT) Default = Simulated Bell (Tone 07)	Use Dials 10's and 100's to select tone from Table 7.1
	Input 3 Tone Select (Link 2 IN) Default = Test message + T3 (Tone 43)	Use Dials 10's and 100's to select tone from Table 7.1
4	Input 4 (Evacuate Switch) Tone Select only when non-RS485 connected	Use Dials 10's and 100's to select tone from Table 7.1
5	Input 3 Mode 3: School Bell Mode	Dial 10 selects the duration of the School Bell tone: 0 = 0.5 sec; 1-9 = 1-9 seconds

Table 7-2: LED Dials Input Selection

7.3.1. Input 3 Mode Selection

Input 3 provides several flexible operating modes, including the 'School Bell' feature.

Input 3 can be configured to operate in one of the following three modes to provide this flexibility:

7.3.1.1. Direct Mode

This is the default mode of operation. When input 3 is activated the tone programmed for input 3 (Tone 7, Simulated Bells) sounds for the duration of the input activation

7.3.1.2. Test Mode

<u>This applies to the ET version only</u>. In test mode (config link 2 fitted) input 3 results in activation of tone 46.
This serves the purpose of commissioning to inform those present that a test is being performed.

7.3.1.3. School Bell / Class Change mode:

The amplifier may be used as a 'School Bell' system, often with a 7-Day Timer. In this mode, the amplifier may be activated by either a rising or falling edge on Input 3.
RS485 control is possible but not recommended in this operating mode.
To enable Class Change, follow these steps:

1. Fit link in **CONFIG Link 3**.
2. Fit link '**ENG**' to access 'Engineering Mode'.
3. Set the configuration mode by putting the Dial 1's to 5 for Class Change tone length selection.
4. Select the duration of the tone operation using Dial 10's to the relevant setting: 0 = 0.5 sec, 1 = 1 sec, 2 = 2 secs, etc., to 9 = 9 secs.
5. Momentarily short link '**WR**'.
6. Check the input has been configured to operate as required.

The maximum duration of the School Bell activation has been limited to 9 seconds to ensure the amplifier does not unnecessarily drain the battery.
The default 'School Bell' (Tone 07) is a recorded school bell. Due to the nature of recording analogue signals, the output level of this signal is about 12dB below that of the digital signals. Alternative tones, which may be used for 'School Bell' operation, are the following:

Tone 37 for 5 seconds	1000/650Hz Two-Tone Chime
Tone 21 for 3 seconds	800Hz 0.25sec ON, 1 sec OFF - Intermittent
Tone 08 for 3 seconds	PA400 Tone

To maintain separation between the Fire Alarm panel and auxiliary equipment, the School Bell Timer should not be installed within the Fire Panel.

RS485 Inputs	Sounder Circuit Inputs				Global Inputs	Amplifier Output
	BELLS INPUT	INPUT 1	INPUT 2	INPUT 3	INPUT 4 (EVAC SW)	
OFF	OFF	OFF	OFF	OFF	OFF	No Tone
OFF	OFF	OFF	OFF	State Change	OFF	Custom Tone for 0.5 to 9 sec
LED 'n+2' on	OFF	OFF	OFF	OFF	OFF	Custom Tone for 0.5 to 9 sec
LED 'n+2' off	OFF	OFF	OFF	OFF	OFF	Custom Tone for 0.5 to 9 sec

When in programming mode the yellow Fault LED indicates the current selected operating mode

Defect Led Flash	Operating modes selected	Link 2 or 3 fitted
2 Short Flashes	Standard Operating mode	Neither
1st Flash Long	Test Mode	Link 2
2nd Flash Long	Input 3 Mode = Class Change Mode	Link 3
2 Long Flashes	Test mode & Class Change Mode	Link 2 and 3

Table: 7-3: Engineer Mode Display

Note:
Please ensure LINK 2 is removed (Link 3 fitted) for Class change operation
Link 2 must only be used for commissioning/test mode

8. FIRMWARE VARIANT: ‘EVACGM-ET’

Note: This variant only applies to firmware version 2.xx (hardware version v1.02 or less). It is not available on firmware version 3.00A or greater.

‘Test Message’ mode is used when a test button and test message are required for building commissioning purposes. In ‘Test Message’ mode, when Input 3 is activated, and Config Link2 is installed, a test message followed by 3 cycles of T3 Tone is produced. Special Firmware is required to enable this mode – refer to Section 9:

	Input	Priority	Mode	Warn Sys Iso ON
Direct Inputs	Input 4 (Isolate mode)	1	Evac Gen Isolated	
	FIRE MIC	2	FIRE MIC mode	
	Bell Input (only)	3	EVAC	
	FIP input	3	EVAC	
	Input 1	3	EVAC	
	Input 4 (Warn sys on)	4	EVAC	NO TONE
	Input 2	5	ALERT	
	Input 3	6	TEST MESSAGE	
	Input 3 (class change)	7	Edge triggered CUSTOM	
	PA MIC	8	PA MIC mode	
Automatic Inputs	Fire MIC LED 'n+3'	9	FIRE MIC mode	
	LED 'n'	10	EVAC	
	Panel Warn Sys ON (RS 485 command)	10	EVAC	NO TONE
	LED 'n+1'	11	ALERT	NO TONE
	LED 'n+2'	12	CUSTOM	
	LED 'n+2' (class change)	12	CLASS Change	
	PA MIC LED 'n+4'	13	PA MIC mode	

Table 8-1: Input Priorities (ET Version)

Active Input	Bells Enable Link Out	Bells Enable Link In	
		Bells ON	Bells OFF
Bell Input	EVAC	EVAC	No Tone
Input 1	EVAC	EVAC	No Tone
Input 2	ALERT	ALERT	No Tone
Input 3	CUSTOM	CUSTOM	No Tone
Input 3 (Class Change)	Edge Triggered CUSTOM		
Input 3 (ET link fitted)	TEST MODE		
Input 4	EVAC		
Input 4 (ET link fitted)	EVAC Gen Isolated		
FIP	EVAC		

Table 8-2: Direct Input Mode (ET Version)

8.1. Switch Control Mode Configuration

This mode is enabled by installing Config Link 2. The Evac Generator Module 'Tone Inputs' are configured for use with a 5-pole control switch, and a single-pole Test switch.

The Microphone must be wired to the MIC2 input and PTT Input 2. See Fig 8.1 for details.

Tone Input Connection:

Off	IN4 selected – the generator is disabled and is isolated from the panel. - a non-latching fault is signalled - after commissioning, the switch must be returned to the Auto position
Auto	No Input selected - the generator operates normally from the RS485 bus or by BELL reversal raising an Evacuation alarm
Evac	IN1 selected – the generator activates into Evac mode
Alert	IN2 selected – the generator activates into Alert mode
Test Mode Switch	IN3 selected – the generator activates a standard test message used for commissioning
Test Message:	"Your attention please! This is a test of the building evacuation system"
PA	The rotary switch contact is connected in series with the microphone PPT switch The microphone only operates when the Control Mode switch is in the 'PA' position

8.2. Switch Control Mode Connection

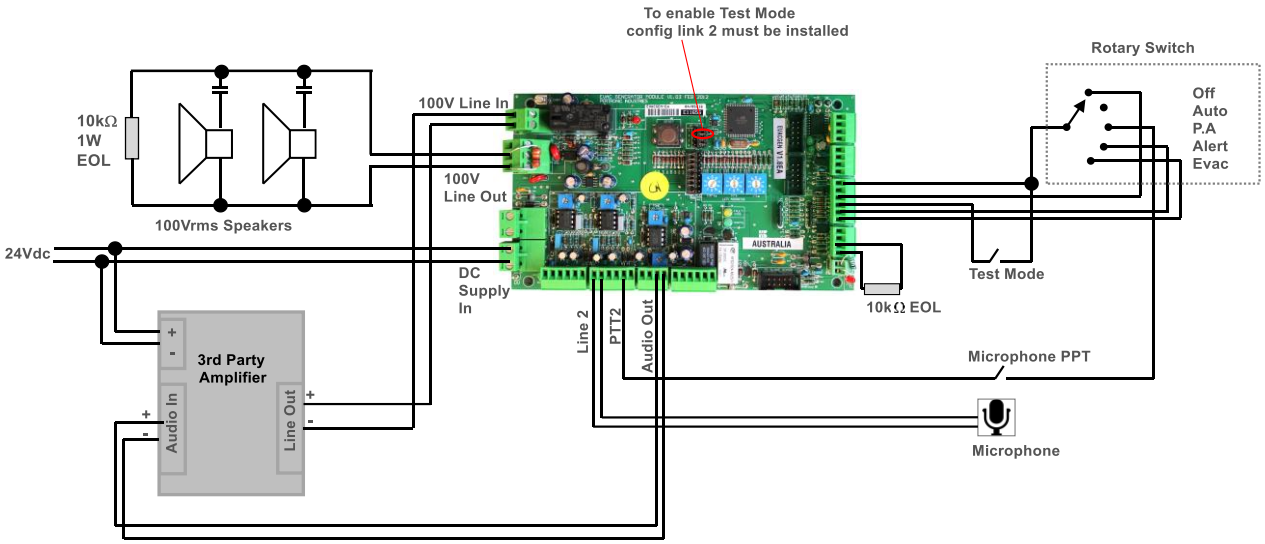

Figure 8.1: Switch Control Mode Connection

9. EVAC GENERATOR MODULE FIRMWARE UPGRADE:

The Evac Generator Module uses an AVR processor, which can be field upgraded. If, for example, a custom tone needs to be added, the firmware can be modified.

The upgrade may be performed using the FISP Programmer.

9.1. FISP Programmer

Each Pertronic product containing an AVR microprocessor requires a separate FISP Project file be loaded. This sets up the correct AVR device type together with the Firmware filename and AVR Fuse bit settings. Note: the correct project file must be used or the Pertronic device may be rendered unusable.

There are two variants of the EVACGEN board.

- For hardware versions 1.02, select Mega128 in the 'Device' dropdown menu of the FISP Programming Window. (Device > Atmel > AVR > Mega > Mega128/A).
- For hardware versions 1.03, select Mega2561 (Device > Atmel > AVR > Mega > Mega2561)

A full suite of Project files together with firmware binaries are available on the Pertronic website: **www.pertronic.com.au.** A password is required to log into the secure section of the website – this is available from the local Pertronic Industries office:

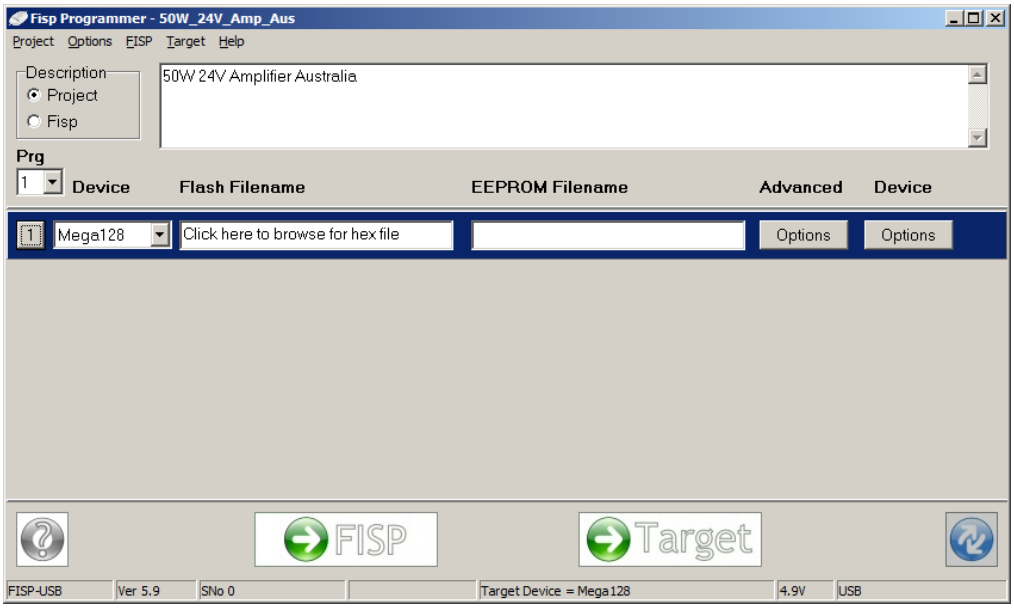

Figure 9.1: FISP Programmer Window for Programming a Pertronic AVR Device

To Load a Project:

1. Click on Project->Open Project Menu - this opens a file selection dialog.
2. Navigate to the folder containing the 'Project' file.
3. Load the relevant Project for the Pertronic product to be programmed.

To change the firmware file to load, click in the Flash Filename window and select the required *product*.hex binary file. **Note** that the FISP supports only firmware with the ".hex" format. The ".srec" format supported by AVR cannot be used.

Once the Programmer has been configured, the Pertronic Device is ready to be programmed. This can be done either with the programmer still connected to the PC or the programmer can be unplugged and used in stand-alone mode.

To Program the Pertronic Device with the PC connected:

1. Plug the FISP Programmer 10-way IDC lead into the Flash Programmer socket on the target PCB - the Target button illuminates on the FISP Programmer software.
2. Click on the 'Target' button and wait until the programming and verification is complete.

To Program the Pertronic Device in Stand-Alone mode:

1. Unplug the FISP Programmer from the PC and plug the Programmer 10-way IDC lead into the Flash Programmer connector on the target PCB.
2. The LED on the FISP Programmer flashes orange when programming is underway and turns green when the programme has downloaded successfully or yellow if programming fails.

10. PRODUCT CODES:

Description	Product Code
Evac Generator Module with Standard Evac and Alert Messages	EVACGM-EA
Evac Generator Module with Evac and Test Messages (no Alert Message)	EVACGM-ET
External Microphone Signal Boost Pre-Amplifier	PREAMP-RB
Pertronic Sounder Speaker: 1W Flush Red	PSS1-R
ertronic Sounder Speaker: 1W Flush White	PSS1-W
Pertronic Speaker with B501 Analogue Addressable Base	PSSB501
Pertronic Speaker with B524IEFT Analogue Addressable Isolator Base	PSSB524IEFT
Pertronic Speaker with B401 Conventional Base	PSSB401
EVAC Cable, 2 x 1.25mm^2 Twisted Pair, Grey, 200m Drum (2405*2P)	EVACCBL

Table 10-1: Product Codes

Document Change History

Issue No	Reason for Update	Description of Changes	Author
Issue 1.0	Initial formal release: Nov 2007	Manual based on 50W Amplifier Manual	ShaneR
Issue 1.2	New feature plus extra tones	School bell mode plus extra tones added	Simon E & PF
Issue 1.3	Minor corrections to tones	Tables 7.1 and 8.1 changed	Simon E
Issue 2.0	14 Aug 2012. CN1493	Added LCD mode. Class change ignores evac / alert inputs. Input 3 Class change irrespective of Warn Sys Iso / EBCO. Direct override all automatic (LED map) inputs.	Simon E RDB
Issue 2.1	Extra table for Section 3	Took off extra table for section 3.	Sunny Sun
Issue 2.2	CN2308	Update of PREAMP-RB information for A2055A model	JPF
Issue 2.3	CN2869	Updated Fig.8-2. Removed note in section 5.2.4. Added F220 fault table 3-2.Changed title in manual's properties. Firmware variant ET warning	RJK