• **Melbourne**

Unit B2
2A Westall Rd
Springvale
VIC 3171
Tel (03) 9562 7577
Fax (03) 9562 8044
sales.vic@pertronic.com.au

• **Sydney**

Unit 19
287 Victoria Rd
Rydalmere
NSW 2116
Tel (02) 9638 7655
Fax (02) 9638 7688
sales.nsw@pertronic.com.au

• **Brisbane**

Unit 3
43 Sandgate Rd
Albion
QLD 4010
Tel (07) 3255 2222
Fax (07) 3054 1458
sales.qld@pertronic.com.au

• **Adelaide**

65 Manton St
Hindmarsh
SA 5007
Tel (08) 8340 9533
Fax (08) 8340 9544
sales.sa@pertronic.com.au

• **Perth**

3/71 Beringarra Ave
Malaga
WA 6090
Tel (08) 6555 3008
Fax (08) 9248 3783

www.pertronic.com.au

PERTRONIC
F16E
AUTOMATIC FIRE ALARM
(AS4428.1:1998)
TECHNICAL MANUAL
AUSTRALIA

Valid For F16e:

Master PCB Hardware:	**v1.10A and greater**
Master PCB Firmware:	**v1.30 and greater**
Extender PCB Hardware:	**v2.00 and greater**
Extender PCB Firmware:	**v1.30 and greater**

Issue 15

Serial Number:

Date of Manufacture: … / … / …

The contents of this manual are copyright.

This document is to be used only for operating Pertronic F16e Fire Alarm systems.

This document is not to be reproduced, photocopied or passed in part or whole to a third party without the express, written authorization of Pertronic Industries Pty Ltd

Acronyms:

AVF	Alarm Verification Facility	A facility designed to minimise 'false alarms' by ensuring multiple operation of devices (smoke detectors and M512 Modules) before the alarm is raised.
BCO	Bell Cut-Off	Bell Cut-Off switch terminates the output from the panel BELL relay. Two BCO switches are provided, an External BCO switch for Brigade and Tester use and an Internal BCO for Fire Technician use.
DBA	Direct Brigade Alarm	Fire Sprinkler pressure switch/transmitter unit.
EOL	End of Line	End-of-Line termination, normally 10kΩ Resistor, used to monitor the presence and integrity of the detector circuit.
LED	Light Emitting Diode	
MCP	Manual Call-Point	
OC	Open-circuit	
PCB	Printed Circuit Board	
ROM	Read Only Memory	A one time programmable device for storing system data.
SC	Short-circuit	

CONTENTS

1. Introduction 1
   - 1.1 Functional Description 2
   - 1.2 Cable Requirement 2
   - 1.3 Specification 3
2. Operation 4
   - 2.1 Panel Controls and Facilities 4
   - 2.2 Power ON 6
   - 2.3 Normal Operation System Tests 7
3. Mapping 8
4. Configuration 9
   - 4.1 Circuits and Circuit Indicators 9
   - 4.2 Related Faults 9
   - 4.3 Entering Configuration Mode and Displaying the Configuration 10
   - 4.4 Zone Assignment Meanings 10
   - 4.5 Changing the Configuration 11
   - 4.6 Restoring Panel Default Options 13
   - 4.7 Configuration Mode Timeout 13
5. System Features 14
   - 5.1 Fire Signalling Relay (K101-3). 14
   - 5.2 Fault Signalling Relay (K104-6). 14
   - 5.3 Battery Fault Signal (K116). 14
   - 5.4 Zone Circuits. 14
   - 5.5 Alarm Verification Facility (AVF). 15
   - 5.6 Monitored Bell Circuits (K19). 15
   - 5.7 Auxiliary Control Facility (ACF) Relay (K7). 15
   - 5.8 External RS-485 (K1). 15
   - 5.9 External Fault Input (K3). 15
   - 5.10 F1 / Walk Test (SW4). 15
   - 5.11 Alarm and Fault Tests. 16
   - 5.12 F2 / Global LED and Zone Test (SW5). 16
   - 5.13 Zone Alarm Test. 16
   - 5.14 Zone Fault Test. 16
   - 5.15 F3 / Internal BCO (SW6). 16
   - 5.16 Internal Bell Cut-Off. 16
   - 5.17 Configuration. 17
   - 5.18 External Evacuation. 17
   - 5.19 Zone Extension Board. 17
   - 5.20 LED Fault Indicators. 17
   - 5.21 Door Interlock (K16) 18
   - 5.22 Door Open Warning 18
   - 5.23 Earth Fault Detection 19
   - 5.24 Fault Buzzer. 19

5.25 24-Hour Auto Test 19
5.26 Manual Start of 24-Hour Test (Firmware V1.32 onwards) 19
5.27 Timer Power Supply 19
5.28 Mains Indicator 19
5.29 Battery Capacity 19
5.30 Charger Fault. 20
5.31 Zone Alarm Outputs. 20
5.32 Zone Fault Indicators. 20
5.33 Brigade Interface Outputs. 20
5.34 Duct Probe Option. 20
5.35 Battery Calculation Examples. 21
6. Detector and Module Compatibility 22
6.1 Detector Limitations. 22
7. Installation Instructions 23
7.1 Pre-Installation Check. 23
7.2 Panel Installation and Power Connection. 23
7.3 Other External Devices. 23
8. Monthly Testing 24
9. Datum Levels 25
10. Ordering Information and Spare Parts 26
10.1 Ordering Information 26
10.2 Spare Parts 26
10.3 Fuse Replacement 26
11. Diagrams 27
11.1 F16e Board Layout 27
11.2 F16e System Wiring 28
11.3 F16e LED / Relay Drive Circuit. 29
11.4 F16e Connector Pin-Out. 29
11.5 F16e Extender, Keyboard and AFI Wiring. 30
11.6 F16e Detector Wiring. 31
11.7 F16e Sounder Wiring. 31
11.8 F16e Amplifier Connections. 32
11.9 F16e Zone Alert. 33
11.10 Cabinet Dimensions 34
12. Configuration Records 35

FIGURES

Figure 1.1: F16e Block Diagram 1
Figure 4-1: Location of Configuration Switches and LEDs 9
Figure 9.1: M-Value Voltage Bands (Vref = 20.0Vdc – Nominal) 25
Figure 11.1: F16e Board Layout 27
Figure 11.2: F16e System Wiring 28
Figure 11.3: F16e LED / Relay Drive Circuit 29
Figure 11.4: F16e Connector Pin-Out 29
Figure 11.5: F16e Extender. Keyboard and AFI Wiring 30
Figure 11.6: F16e Detector Wiring 31
Figure 11.7: F16e Sounder Wiring 31
Figure 11.8: Pertronic 20W Amplifier Connection 32
Figure 11.9: Pertronic 50W Amplifier Connection 32
Figure 11.10: Zone Alert Wiring 33
Figure 11.11: Cabinet Dimensions 34

TABLES

Table 2.1: LED Indication 4
Table 4.1: Indicator LED Configuration Assignment 10
Table 4.2: Zone Assignments 10
Table 5.1: Decoded Bells Fault: LED17; D1 17
Table 5.2: Decoded Battery Fault: LED17; D2 18
Table 5.3: Fault Indication: LED17; D3-D10 18
Table 5.4: Extender Fault Indication 18
Table 5.5: Battery Calculations 21
Table 5.6: Current Values 21
Table 6.1: Detector Limitations 22
Table 10.1: Ordering Information 26
Table 10.2: Spare Parts 26
Table 10.3: Fuse Replacement 26

1. INTRODUCTION

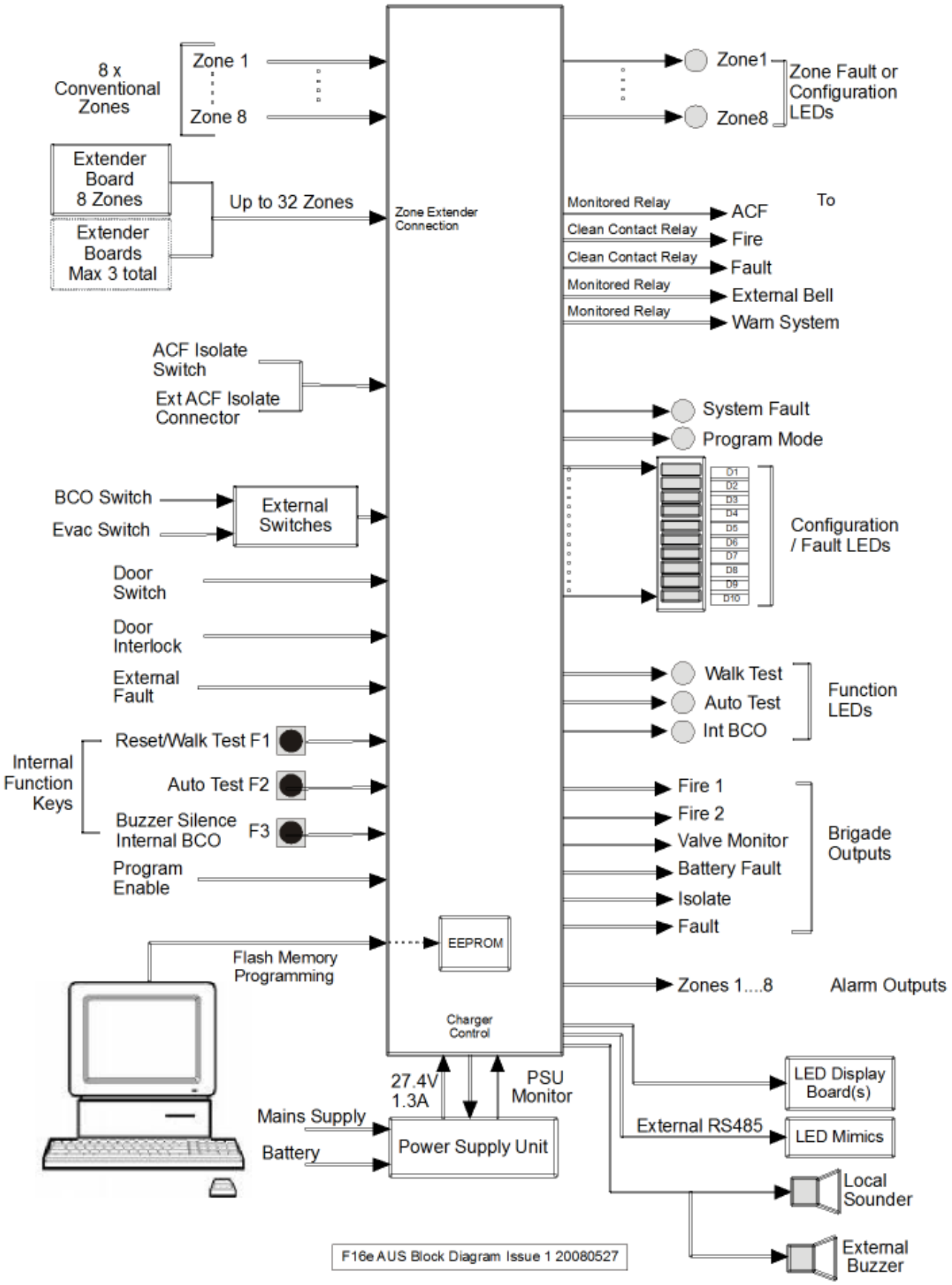

Figure 1.1: F16e Block Diagram

1.1 Functional Description

The **Pertronic F16e** is a conventional detector automatic fire alarm system, designed for small to medium-sized building applications. The system has 8, 16, 24, or 32 zones, and up to 40 detectors may be installed on each zone.

All functions are controlled by software which is stored in non-volatile flash memory and can only be modified using a PC Utility with a dedicated connector. The configuration for each zone is held in EEPROM, which is modified by entering the Configuration Mode with the Program Enable link inserted.

The **F16e** complies with Australian Standard 4428.1.

Overview of Features:

- Each of the zones can accommodate Manual Call-Point, Heat detector, and Smoke detector devices. The zones use a floating 'datum' that compensates for slow variations in environmental effects and allows up to 40 Smoke detectors to be installed on each zone.
- Front panel display includes the Fire-Fighter Facility, ACF Isolate and Alarm/Fault Test switches.
- On-board configuration push-buttons and LED display.
- Each zone can be configured for
  - Brigade Calling (2 independent relays – **Fire1** and/or **Fire2**)
  - **EXT BELL** and/or **WARNING SYSTEM** operation
  - latching or non-latching operation
  - AVF enable/disable
  - Monitored ACF Relay operation.
  - Valve Monitor relay operation.
- Each zone may be individually isolated - this is indicated by the Zone display Isolate LED.
- Alarm, Fault and Isolate LED display for each zone.
- Individual zone alarm status outputs are available – active when zones are in 'Alarm'.
- 2 independent monitored bell drivers (**External Bell** and **Warning System**) – each having 5A sounder drive capability.
- Monitoring station interface - clean relay contacts for Fire1, Fire2, Valve, Battery Fault, and system Isolate.
- Monitored ACF relay output - with front panel and external isolate controls.
- Integrated Manual Call-Point.
- Door Interlock input.
- External Fault input.
- Earth Leakage detection.
- System test functions including 'Battery Absent' monitoring, a 1 hour load test of the batteries every 24 hours, and testing of each zone for correct operation every 24 hours.

1.2 Cable Requirement

All cabling for the Pertronic **F16e** shall comply with AS3000 (Australian Wiring Rules) and AS1670.1 (Fire Detection)

Detection Cable Characteristics: Maximum detection cable loop resistance shall not exceed 100 ohms, excluding the End of Line Device, therefore each leg of the circuit shall not exceed 50 ohms: 2 x 50 =100

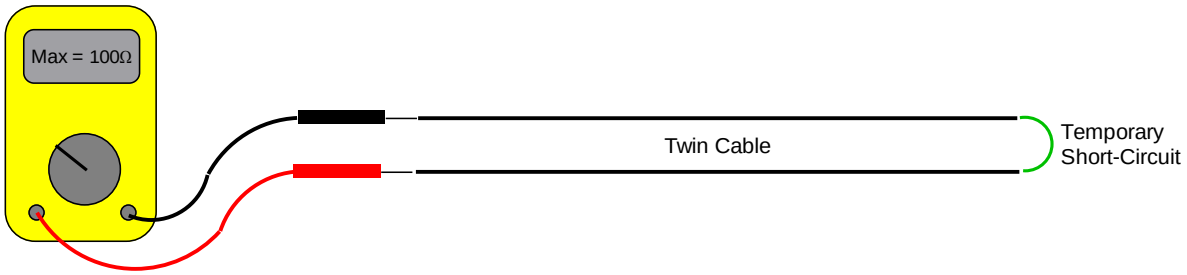

1.3 Specification

Cabinets:	Dimensions: 19” Cabinet: 750 x 550 x 185 H x W x D mm Rack kits are available. Weight: 19” Cabinet: 25kg - excluding batteries Material: 1.2mm mild steel, powder-coated beige.
Power Supply:	200 to 250Vac, 50/60Hz, 30W 27.4Vdc @ 1.0A – nominal@ 20^{0}C; Temperature Compensated 26.4V@ 35°C to 28.2V @ 5°C Internal battery: 2 x 12Vdc, 7Ah sealed Lead Acid (Gel-Cell). Automatic ’24-Hour’ battery test.
DC Current Consumption:	Normal: 95 mA. **F16e** panel only, 8 circuits only. Alarm: 175 mA Panel in ‘Alarm’ (Fire relays ON) - Sounder current not included.
Detector Circuits:	All zone circuits are designed to accept Smoke detectors, Heat detectors or Manual Call-Points. A mixture of detector or Call-Point types may be used on any zone, subject to the compatibility limitations as described in Section 6: Detector and Module Compatibility. The battery supplies the circuits - nominally 24Vdc. All circuits must be terminated with a 10kΩ, 1% End of Line (EOL) resistor. A floating datum method is used to monitor the detectors. This technique allows up to 40 smoke or heat detectors to be installed on one zone.
Zone Output Connector:	A current sink signal is available from each zone to indicate when the zone is in ‘Alarm’. Maximum current from each output is 25mA; the total current from all outputs must not exceed 250mA.
LED Display:	LEDs: 8 general and 8, 16, 24, or 32 x 3 Zonal AFI.
Fault Display:	Individual ‘Fault’ LEDs for each zone. Separate Bell Fault, Battery Fault and decoded System Fault LEDs and front panel Charger Fault LED.
Brigade Interface:	FET current-sink outputs for Brigade use are available for Fire1, Fire2, Valve, Battery Fault, Fault, and System Isolate. 100mA total current may be taken from these outputs. An optional Brigade Interface relay board is available for connection to the current-sink outputs.
Configuration Keys:	3 push-buttons and an 8-way bar-graph LED for configuration setup and zone isolation.
Fire Relay:	1 changeover contact rated 1.25A @ 28Vdc, normally de-energised.
Fault Relay:	1 changeover contact rated 1.25A @ 28Vdc, normally energised.
Warning System:	2 separate sounder relays, each having one normally-open contact
External Bell:	rated 5A @ 28Vdc, with circuit monitoring. The maximum combined sounder load is 1.0A (using the **F16e** power supply).
ACF Relay:	Monitored ACF relay, normally de-energised. Change-over contacts rated 1.25A @ 28Vdc.
Other Functions:	Fire-Fighter Facility. ACF Isolate. Provision for an external Evacuate switch. Door microswitch and Door Interlock input. External Fault input. External Buzzer connector for additional buzzer(s).
Options:	Up to 3 Extender boards with 8 zones each, and corresponding AFI boards. Brigade Interface board.
Environmental:	Temperature -5°C to +45°C Humidity +40°C or below, ≤ 95% relative humidity +41°C to +45°C, ≤75% relative humidity.

2. OPERATION

2.1 Panel Controls and Facilities

2.1.1 AFI Display

Separate LED display hardware provides local indication of the ‘Fire’, ‘Fault’, and ‘Isolate’ status for each circuit.

Global Alarm, Fault, and Isolate LEDs are located within the Fire-Fighter Display area, and Zone LEDs are placed in groups of eight below the main display.

The LED indication is:

Global – ‘A**larm’**	Flashes when there is at least one current alarm, which has not been Acknowledged or Isolated; Flashes rapidly if the system is in Evacuation mode. Steady when all current alarms have been Acknowledged or Isolated
Global – **’Fault’**	Steady ON when any component of the fire alarm system is in Fault; otherwise OFF.
Global – **’Isolate’**	Steady ON when any device or zone is isolated, otherwise OFF.
Zone – ‘A**larm’**	Flashes when a device in the zone is in ‘Alarm’ and the zone has not been Acknowledged or Isolated Steady ON when a device in the zone is in ‘Alarm’ and the zone has been Acknowledged or Isolated
Zone – **’Fault’**	Flashes when any device in the zone is in ‘Fault’; Steady ON when the zone is selected
Zone - **’Isolate’**	Steady ON when the zone is Isolated, otherwise OFF

Table 2.1: LED Indication

2.1.2 Front Panel Display

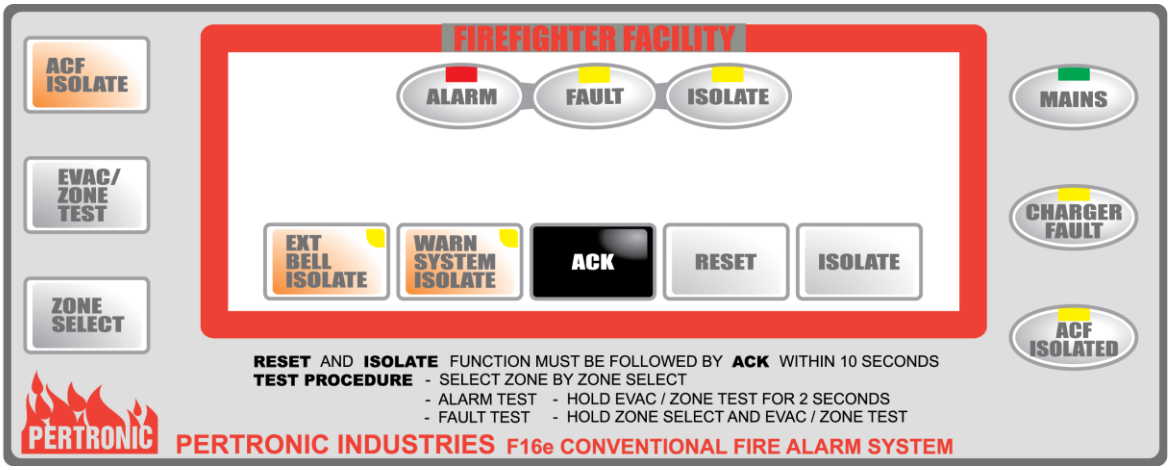

2.1.2.1 Fire-Fighter Facility

The FireFighter Facility has 3 global system status LEDs: **ALARM**, **FAULT**, and **ISOLATE** (refer to Table 2.1); and 5 pushbutton switches: **EXT BELL ISOLATE**, **WARN SYS ISOLATE**, **ACK**, **RESET** and **ISOLATE**.

ALARM LED flashes when any existing alarms have not been acknowledged or isolated through the FireFighter Facility. When existing alarms have been acknowledged or isolated, the **ALARM** LED turns ON steady. If the existing alarms are reset through the FireFighter Facility, the **ALARM** LED turns OFF. If the alarm state re-occurs the alarm or alarms are reasserted causing the **ALARM** LED to start flashing again.

FAULT LED turns ON steady when any component of the Fire Alarm system is in Fault.

ISOLATE LED turns ON steady when any zone is isolated.

EXT BELL ISOLATE is used to isolate and turn OFF (if ON) the External Bell. The isolate function is toggled on or off for each press of the pushbutton. If the External Bell is isolated for more than 8 hours, a visual and audible system fault indication is given.

If the buzzer is silenced at any time, by pressing any pushbutton on the front panel, or **INT BCO** on the main PCB and the isolate condition remains, the audible system fault indication is re-asserted after a further 8 hours.

WARN SYS ISOLATE is used to isolate and turn OFF (if ON) operation of the Warning System. The isolate function is toggled on or off for each press of the pushbutton. If the Warning System is isolated for more than 8 hours, a visual and audible system fault indication is given. If the buzzer is silenced at any time, by pressing any pushbutton on the front panel, or **INT BCO** on the main PCB and the isolate condition remains, the audible system fault indication is re-asserted after a further 8 hours.

ACK, RESET, ISOLATE are used to acknowledge, reset, or isolate existing alarms on the system. These pushbuttons operate as follows:

Acknowledge: press **ACK** to acknowledge all current alarms.

Reset: press RESET to prime the system to reset all current alarms by de-powering the zones containing the alarms. The buzzer pulses for up to 10 seconds until ACK is pressed by the operator to confirm the function required. If ACK is not pressed within 10 seconds, the system reverts to the previous state.

Isolate: press ISOLATE to prime the system to isolate the zones containing the current alarms. The buzzer pulses for up to 10 seconds until ACK is pressed by the operator to confirm the function required. If ACK is not pressed within 10 seconds, the system reverts to the previous state. If a zone is isolated for more than 8 hours, a visual and audible system fault indication is given. If the buzzer is silenced at any time, by pressing INT BCO and the isolate condition remains, the audible system fault indication is re-asserted after a further 8 hours. An isolated zone can only be de-isolated by first selecting the zone. Press any of these pushbuttons to silence the buzzer.

2.1.2.2 Utility Push-buttons and LEDs

The front panel has three other indicator LEDs and three additional function pushbuttons.

MAINS LED: Indicates when the Mains power is ON; otherwise OFF.

CHARGER FAULT: Indicates the following conditions:

LED:
a) the Mains power is OFF or the PSU has a fault
b) the system voltage is too high (above 28.8Vdc)
c) the system voltage is too low (below 26Vdc).

ACF ISOLATED LED: Indicates the ACF relay operation has been isolated through the **ACF ISOLATE** pushbutton. When ACF is isolated, the relay is turned OFF.

ACF ISOLATE Toggles the isolation state of the ACF relay.

a) the **ACF ISOLATED** LED indicates ACF is isolated.

b) when ACF is isolated, the relay is turned OFF.

c) if ACF is isolated for more than 8 hours, a visual and audible system fault indication is given. If the buzzer is silenced at any time (by pressing any key), and the isolate condition remains, the audible system fault indication is re-asserted after a further 8 hours.

EVAC/ZONE TEST **'Evacuation' Test:** press this button, with no zone selected, to activate the bells.

'Alarm' Test: select a zone through **ZONE SELECT**, then hold **EVAC/ZONE TEST** for 2 seconds to commence an 'Alarm' test on the zone selected.

Press **EVAC/ZONE TEST** again to terminate the test.

'Fault' Test: press and hold **EVAC/ZONE TEST**, then press **ZONE SELECT**, for 2 seconds to commence a 'Fault' test on the selected zone - press **EVAC/ZONE TEST** first, otherwise the next zone may be selected. This test continues while the keys remain pressed.

Release the keys to terminate the test.

ZONE SELECT **ZONE SELECT** is used to select a zone to 'Test' or 'Isolate'

The first press selects Zone 1, turning ON the Zone Fault LED.

Further presses of **ZONE SELECT** selects subsequent zones, turning ON the Fault LED for that zone.

'Alarm' or 'Fault' tests on the selected zone may now be performed using **EVAC/ZONE TEST,** or the selected zone may be isolated (or de-isolated if already isolated) by pressing **ISOLATE**.

If a zone is isolated for more than 8 hours, a visual and audible system fault indication is given.

If the buzzer is silenced at any time by pressing any key and the isolate condition remains, the audible system fault indication is re-asserted after a further 8 hours.

Holding **ZONE SELECT** down for more than two seconds automatically moves the selected zone to the next in line at a rate of 2 zones per second while the pushbutton is held down. When the last zone is reached, the selection scrolls to 'no zone selected', to exit.

To quickly exit from the Zone Select mode, terminating any active tests, press **RESET** followed by **ACK** on the front panel.

2.1.3 Configuration Programming:

The **F16e** has three pushbuttons (**F1**, **F2**, **F3**) and a bank of ten indicator LEDs (**LED17; D1**, **D2**, …**D10**) to allow system configuration procedures to be performed. Refer to Section 4: Configuration.

2.2 Power ON

When the **F16e** is powered ON or is RESET, the configuration ROM is checked for data validity.

Each zone is then tested by simulating a short-circuit condition on each of the zone inputs in turn. The inputs are tested individually to ensure any circuit problems are detected. Then the **F16e** calibrates each zone circuit in order to find the operating datum for each zone.

2.3 Normal Operation System Tests

While the **F16e** is operating, various tests are continually being performed. These tests fall into two categories: General System tests and 24-Hour System tests.

2.3.1 General Tests:

Charger Voltage test	every ½ second.
Battery Absent test	every 10 seconds.
Door Open detection	every ½ second.
Check Monitored Bell relays	every ½ second.
Check Earth Leakage	every ½ second.
CRC check	every hour
Watchdog - processor running.	continuous

(If the processor does not pass regularly through predefined locations, the watchdog resets the processor, and a fault is signalled appropriately on automatic restart.)

2.3.2 24-Hour Tests:

Battery Capacity test	charger low for 1 hour
Zone Circuit Fault test	at the beginning of the 24-Hour test

3. MAPPING

The **F16e** does not support a programmable mapping system.

The zones are simply mapped on a one-to-one basis to corresponding LEDs of the LED display. Consequently, when a particular zone is in ‘Alarm’, the corresponding LED of the LED display is activated.

For example, Zone 1 will activate LED 1 of the display when Zone 1 is in ‘Alarm’, and Zone 8 will activate LED 8 of the display when it is in ‘Alarm’.

4. CONFIGURATION

The **F16e** has three (3) pushbuttons (**F1**, **F2**, **and F3**) and an array of ten indicator LEDs (**LED17: D1**, **D2**, … **D10**) to allow system configuration and circuit isolation procedures to be performed.

The **SYSTEM FAULT** and circuit defect LEDs are used to identify the system or particular circuit in which configuration programming or circuit isolation is to be performed.

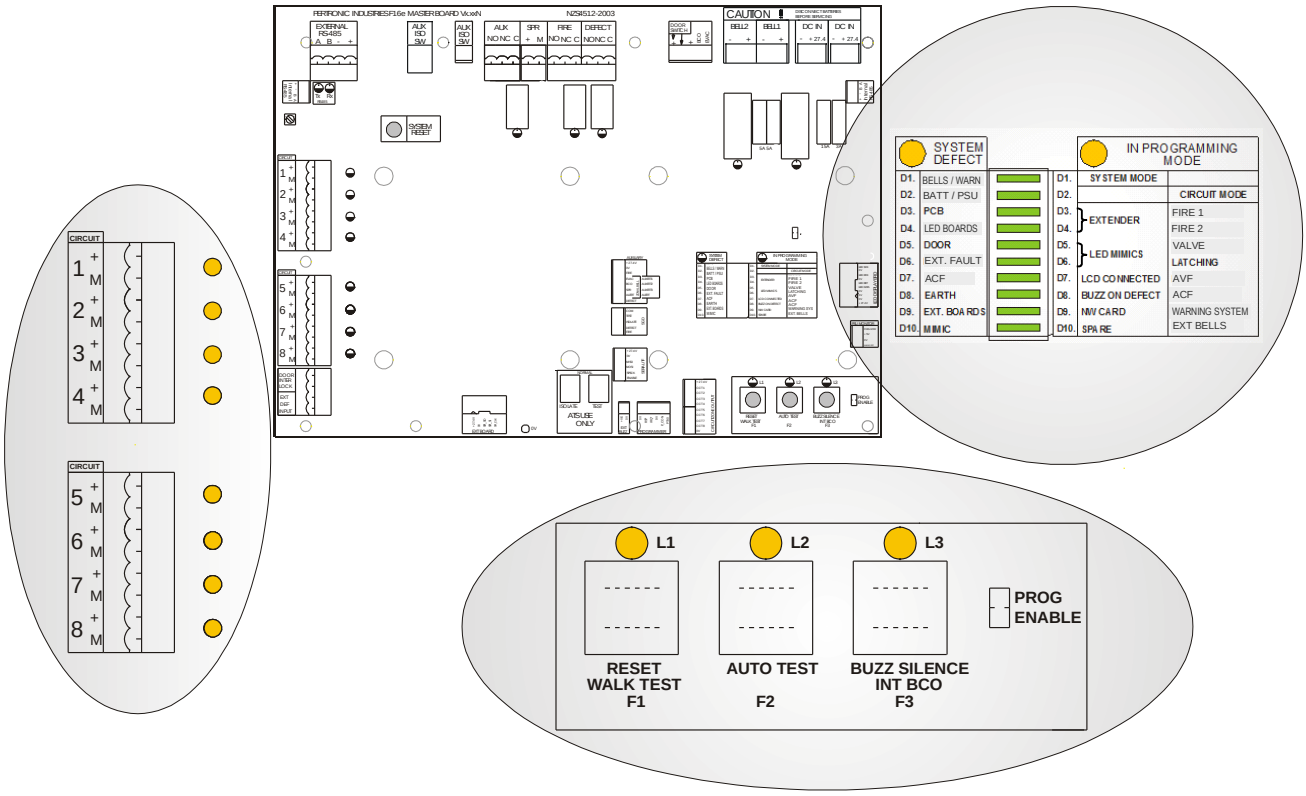

Figure 4-1: Location of Configuration Switches and LEDs

4.1 Circuits and Circuit Indicators

The number of circuits can be incremented in multiples of 8 by adding Extender boards that provide 8 circuits each.

A maximum of three (3) Extender boards can be connected, providing a total of 32 circuits, inclusive of the Master board.

For each Extender board, an additional LED board is required to signal alarms on the corresponding circuit.

Configuration of additional Extender boards is described in Section 4.3: Entering Configuration Mode and Displaying the Configuration.

4.2 Related Faults

If the number of Extender or LED Display boards does not match the number specified in the system configuration, the panel will display a ‘Defect’, identifying either ‘Ext Boards’ or ‘LED Board’ Fault, depending upon which configurations do not match.

NOTE: The LED chain MUST be closed with a link across the middle pins (‘Data Out’ and ‘Data Return’) of the extension connector. A ‘LED Board’ Fault will be displayed if this link is not fitted.

4.3 Entering Configuration Mode and Displaying the Configuration

To enter configuration mode, press and hold **F3** until the buzzer beeps twice and the **IN PROGRAMMING MODE** LED turns ON—this takes about 3 seconds. LED18 remains on while the system is in configuration mode.

At this point the **SYSTEM MODE** LED is also ON, indicating that programming of the system configuration can proceed. The eight indicator LEDs (**LED17: D3** to **D10)** show which System options have been selected. The options and Factory Default values are:

LED17; D1 = System mode selected

LED17; D2 = Circuit mode selected

LED17	SYSTEM Assignments				Default	ZONE Assignments	Default
D3	OFF None	ON 1	OFF 2	ON 3	Extenders Default = None	Fire 1	Yes
D4	OFF	OFF	ON	ON		Fire 2	Yes
D5	OFF None	ON 1	OFF 2	ON 3	Mimics Default = None	Valve	No
D6	OFF	OFF	ON	ON		Latching	Yes
D7	Not used					AVF	No
D8	Buzzer on Fault				Yes	ACF	Yes
D9	Future enhancement				No	Warning System	Yes
D10	Duct Mode				No	External Bell	Yes

Table 4.1: Indicator LED Configuration Assignment

4.4 Zone Assignment Meanings

Fire 1, Fire 2	When one or both are enabled, the corresponding Brigade Interface FET output **FIRE1** or **FIRE2** activates when the zone is in alarm.
Valve	When enabled, the **VALVE MON** Brigade Interface FET output activates when the zone is in alarm.
Latching	When disabled, the zone is in 'automatic reset' mode to prevent devices latching the zone circuit.
ACF	When enabled, the ACF relay activates when the zone is in alarm.
AVF	Enables the 5 minute Automatic Verification Facility for that zone.
Warning System	When enabled, the Warning System relay activates when the zone is in alarm.
External Bells	When enabled, the External Bell relay activates when the zone is in alarm.

Table 4.2: Zone Assignments

If the option is enabled, the corresponding LED is ON; otherwise, the LED is OFF.

Press **F3** to move the indicating LED from **SYSTEM MODE** (D1) to **CIRCUIT MODE** (D2); the Fault LED of **CIRCUIT 1** turns ON indicating that it is selected.

The configuration of CIRCUIT 1 is displayed on indicator LEDs **D3–D10**, shown in Table 4.1.

- Any circuit may be selected using **F3**; its configuration is displayed by the indicator LEDs.
- Press **F3** again to increment the selected circuit to the next one.
- From the final circuit of the system, the selection returns to the **SYSTEM** LED, and then back to Circuit 1 when **F3** is pressed again.
- Press and hold **F3** until the buzzer beeps twice (about 2-3 seconds) to release the **F16e** from the configuration mode.

4.5 Changing the Configuration

The link **PROG ENABLE** (located at the bottom right corner of the main PCB) must be inserted before configuration changes can be implemented. This enables the EEPROM memory, which holds the configuration data, to be updated. At the end of the configuration update process, the link ***must*** be removed to prevent inadvertent alteration of the configuration.

The **PROG ENABLE** link forms part of the door interlock system—if the link is still present when the door is closed, a door interlock fault occurs, sounding the buzzer.

Overview of Configuration Steps

1. Insert the PROG ENABLE link.
2. Enable Programming Mode.
3. Select the System or the specific circuit that needs a configuration change.
4. Observe that area's configuration.
5. Select the option to be changed.
6. Make the change.
7. Exit Programming Mode.
8. Remove the PROG ENABLE link.

Detailed Configuration Steps

(See Figure 4.1 on Page 8 for the circuit board location of features shown below.)

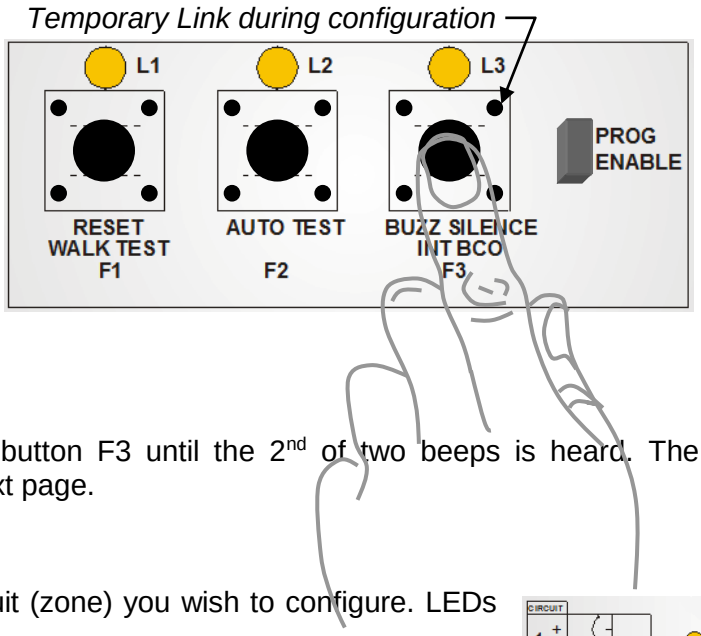

Options can be re-configured for the System itself and for any of the detector circuits monitored by the panel. Without any expander boards there are a maximum of 8 detector circuits; with a full complement of expander boards, there can be as many as 32 detector circuits.

STEP 1—

Insert the PROG ENABLE link.

STEP 2—

Enable Programming Mode by holding down button F3 until the 2nd of two beeps is heard. The Programming Mode LED will illuminate. See next page.

STEP 3—

Select the System or the specific detector circuit (zone) you wish to configure. LEDs indicate which is currently selected:

- If a detector circuit is selected, 3 LEDs are illuminated—
  - The *IN PROGRAMMING MODE* indicator,
  - The D2 *CIRCUIT MODE* indicator, both on the master board and illustrated at Step 4, next page, and
  - The appropriate circuit's numbered indicator, which is on the master board—illustrated at right—or in a similar display on an expander board, if included.
- If the System instead is selected, only 2 LEDs are illuminated—
  - The *IN PROGRAMMING MODE* indicator, and
  - The D1 *SYSTEM MODE* indicator.

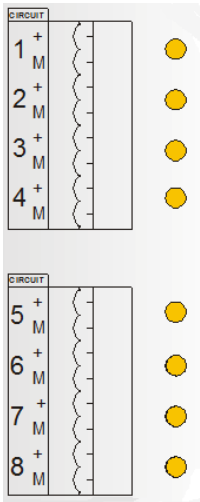

Press the **F3** button to move from circuit to circuit, and back to the System following the last circuit. If any expander boards are used, pressing F3 will select the additional circuits beyond 8 before going back to the System selection. Each time F3 is pressed, you will hear a beep. Stop pressing F3, of course, when you have reached the circuit which needs configuring.

STEP 4—

Observe the **existing configuration** for the System/circuit whose settings need changing.-

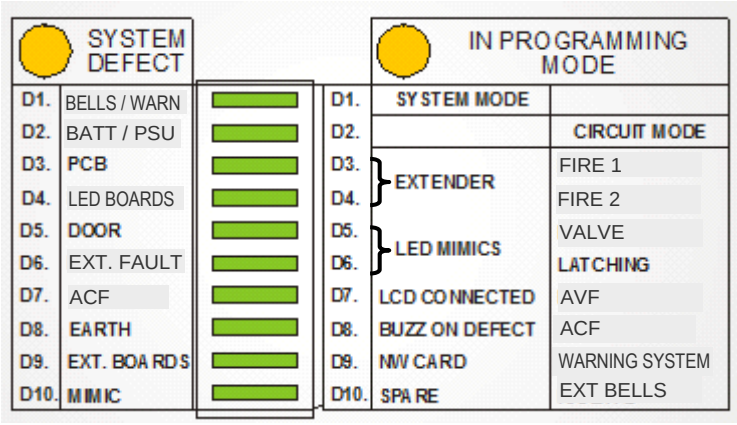

The current configuration is displayed on indicator LEDs **D3 through D10**. These are located above the F1, F2, and F3 buttons on the master board and are illustrated at right.

NOTE: The configuration displayed is *only* that of the system or specific circuit selected at the time.

LEDs are defined in separate columns for the System and for the zones. LEDs display the existing configuration in this manner:

- If an option is enabled, the corresponding LED will be *ON*.
- If an option is not enabled, the corresponding LED will be *OFF*.

STEP 5—

Press **F2** to select the option that needs to be changed—each press of the button will produce a beep.

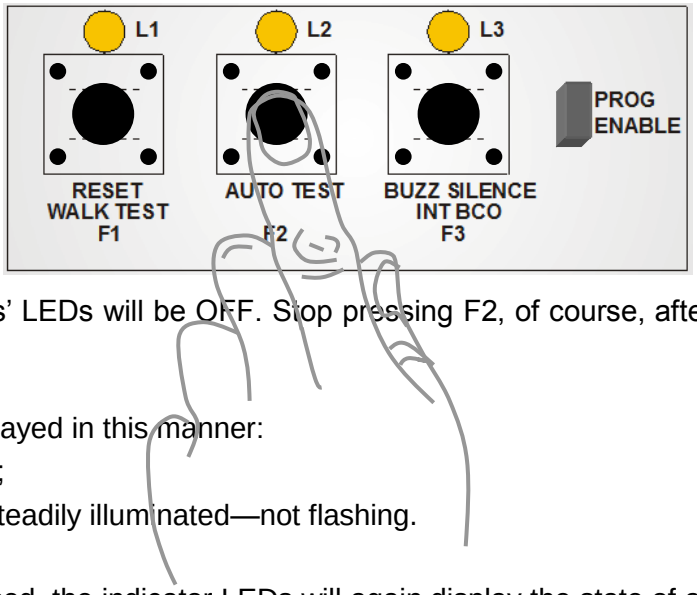

The first press of F2 selects the option represented by D3. The next press of F2 selects the option represented by D4, and so on through D10. (Only the selected option will have an illuminated LED: the other options' LEDs will be OFF. Stop pressing F2, of course, after selecting an option that needs to be changed.

The current state of the selected option is displayed in this manner:

- If the option is enabled, its LED flashes;
- If the option is not enabled, its LED is steadily illuminated—not flashing.

After D10 is selected, the next time F2 is pressed, the indicator LEDs will again display the state of all configuration options for the currently selected system/circuit. (Press F2 to again begin cycling through the options one-by-one, if necessary.)

STEP 6—

Press **F1** to CHANGE the current option's setting.

As noted above, the state of the currently selected option is displayed in this manner:

- if the option is enabled, its LED flashes;
- if the option is not enabled, its LED is on but *not* flashing.

The configuration setting is alternately enabled and disabled by each press of **F1**.

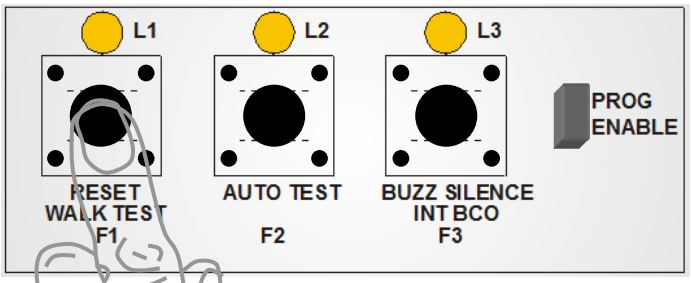

STEP 7—

More choices or, just finish and EXIT Programming Mode:

- To navigate to another option that may need changing on the same circuit/System, press **F2** to cycle through the options.
- To navigate to another zone or to the System, press **F3**.
- To EXIT Configuration Mode, hold down **F3** for 2 seconds—release the button after you have heard the second of two beeps. The **F16e** saves the new configuration, and the panel automatically performs a reset if the hardware configuration has been changed—as when, for example, the number of extender boards has changed.

NOTE: If the **PROG ENABLE** link is removed BEFORE exiting Programming Mode, the configuration is not saved.

STEP 8—REMOVE the **PROG ENABLE** link—but only AFTER exiting Programming Mode.

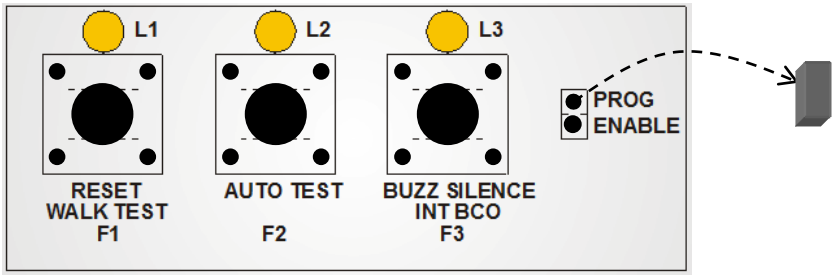

4.6 Restoring Panel Default Options

All zones can be restored to the default settings as shown in Table 4.1

1. Ensure the **PROG ENABLE** link is inserted
2. Press and hold in the **DOOR** switch
3. Press **SYSTEM RESET** momentarily
4. Release the **DOOR** switch when the LEDs start flashing (start up cycle)
5. Remove the **PROG ENABLE** link when the system has returned to normal

4.7 Configuration Mode Timeout

If the panel is left in configuration mode for longer than 30 minutes without any operator activity, the buzzer will pulse for 10 seconds and the panel will return to normal operation. The configuration will be restored to that prior to when configuration mode was entered.

5. SYSTEM FEATURES

5.1 Fire Signalling Relay (K10$_{1-3}$).

The 'Fire' relay is normally de-energised in the non-fire condition and energises in 'Fire'. The NO/NC contacts are available for ancillary services via a plug connector (K10) labelled **FIRE**. The contacts are rated 1.25A @ 28Vdc. The 'Fire' relay has no isolate switch, but can be disabled using the zone configuration feature, Fire1.

The 'Fire' signal is also available as a FET pull-down signal via the connector labelled **BRIGADE: Fire1**. In alarm, this signal is energised (connected to 0V). The FET output can sink up to 25mA.

5.2 Fault Signalling Relay (K10$_{4-6}$).

The 'Fault' relay is energised when there are no faults on the system, and de-energises in either a 'Fault' condition or if the system voltage falls below 24.4Vdc. The NO/NC contacts are available for ancillary services via a plug connector (K10) labelled **FAULT**. The contacts are rated 1.25A @ 28Vdc. This relay has no isolation switch and all isolation must be carried out on the signalling or auxiliary device.

The fault signal is also available as a FET pull-down signal via the connector labelled **BRIGADE: Fault**. This output is normally energised (pulled low to 0V) and de-energises (floats high) in Fault condition. The FET output can sink up to 25mA.

5.3 Battery Fault Signal (K11$_6$).

The battery fault signal is available as a FET pull-down output via the connector labelled **BRIGADE: Batt Fault**. This output is normally energised (pulled low to 0V) and de-energises (floats high) when the system voltage falls below 20Vdc. The FET output can sink up to 25mA.

5.4 Zone Circuits.

All zones are configured to accept Smoke detectors, Heat detectors or Manual Call-Points. A mixture of detector or Call-Point types may be used on any zone, subject to the compatibility limitations as described in Section 6: Detector and Module Compatibility.

All zone circuits must be terminated with a 10kΩ, 1% End of Line (EOL) resistor. A separate 20Vdc power supply is applied to the circuits to enable a range of smoke detector types to be used with the **F16e**.

Manual Call-Points (which reduce the voltage across a detector circuit) give instantaneous (less than ½ sec) operation of the sounders (External Bell and Warning System). Smoke detectors operate after a 5 second verification period (or 20 seconds if AVF is selected for that zone). Once a detector has triggered, the circuit is de-powered for 5 seconds to reset the detector. When the circuit re-powers any further detector triggering within a 15 seconds period (or 300 seconds if AVF is selected for that zone) from the end of the reset period, causes the alarm to activate. The alarm verification modes of operation give substantial protection against transient false alarm activation.

To reduce false alarms, open-circuit conditions give a 'Fault' signal.

Zone configuration programming enables the zones to operate in a number of modes. The three most used modes are:

Normal Operation: Zones in alarm call the Brigade (Fire1 and Fire2 relays), activate the ACF relay, activate the sounders (External Bell and Warning System) and indicate the alarm on the LED display.

Non-Brigade Calling Operation: Zones in alarm ring the sounders (External Bell and Warning System) and indicate the alarm on the LED display.

Non-Latching Operation: is used for sprinkler flow switch and similar indicator only purposes.

At panel start up the zones are ignored for 20 seconds (for firmware to v1.22) to allow all detectors to stabilise before the circuit can generate an alarm. During this start-up period, a LED test cycle is performed and the zone Fault LEDs adjacent to the zone connectors pulse to indicate this process.

From v1.24, datum adjustment is extended a further 40 seconds (1 minute total) - this is indicated by flashing the Global LEDs. An EOL test is performed after the datum level has stabilised

5.5 Alarm Verification Facility (AVF).

The AVF (Alarm Verification Facility) for each zone may be enabled or disabled when configuring the zone. The **F16e** is shipped with AVF disabled.

When an alarm is detected in a zone, the detectors on the zone are reset. If AVF is selected, sampling of the zone does not recommence until 20 seconds after the occurrence of the alarm. The panel does not report an alarm during the 20-second period. If an alarm is then detected within 120** seconds from the end of the verification period, the panel immediately reports an alarm condition.

Alarms received after the 120 second AVF period are treated as first alarms and a new verification cycle is started.

** The AVF for firmware prior to v1.22 is 300 seconds.

5.6 Monitored Bell Circuits (K19).

The **F16e** provides two independent monitored bell circuits (External Bell and Warning System), each with 5A Bell drive capability. These circuits each require a 10kΩ EOL resistor to provide system 'Normal' indication. If either circuit is open or short-circuit, a 'Fault' signal is generated and the **Bells Fault** LED illuminates (see Table 5.1: Decoded Bells Fault: LED17; D1). This indication latches although the 'Fault' signal to the transmitter clears if the fault is removed.

The Bell circuits are monitored using a reverse DC voltage; therefore series blocking diodes are required for all sounder devices.

The circuit fault monitoring sensitivity is set so that up to 3 parallel paths may be used per Bell circuit. To maintain accurate monitoring different End of Line resistor values are required:

1 circuit	1 x 10kΩ EOL resistor.
2 parallel paths	2 x 22kΩ EOL resistors, 1 on each path.
3 parallel paths	3 x 33kΩ EOL resistors, 1 on each path.

5.7 Auxiliary Control Facility (ACF) Relay (K7).

The 'Auxiliary Control Facility' relay is used for auxiliary control purposes (i.e. air conditioning, lifts etc.) and activates when a zone, configured for 'ACF', is in 'Alarm'

When inactive the ACF has a polarity inverted monitoring voltage of +5V. When activated, the relay switches 27V onto the connector (K7). The relay contacts are rated at 1.25A @ 28V.

The ACF Relay may be isolated using the ACF Isolate push-button on the front panel. An external isolate switch may be fitted to the connector **ACF ISO SW (K5)** if required.

5.8 External RS-485 (K1).

This connector provides 27.4Vdc for powering mimic indication and an RS485 serial data port for fault diagnostics and future mimic enhancements.

5.9 External Fault Input (K3).

This input requires a normally-closed contact, opening to signal fault. This facility enables external systems, such as monitored auxiliary DC supplies, to signal fault conditions without the false alarm risks inherent in using zone inputs. This fault is indicated and latched by **D6** of the system fault array. The **SYSTEM FAULT** LED also flashes.

5.10 F1 / Walk Test (SW4).

When the **Walk Test** button **F1** is pressed momentarily (one beep) all latched conditions reset.

When **F1** is held down (two beeps), the **F16e** switches into a self-resetting, non-latching mode. The yellow LED adjacent to the Walk Test pushbutton indicates the mode selected.

The panel remains in Walk Test until the **Walk Test** button **F1** button is pressed again.

Any 24-hour test that would start while the panel is in walk test will be cancelled.

When the **F16e** is in the 'Walk Test' mode and is switched into the 'Fire' condition, the Bell relay pulses approximately once every 2 seconds to distinguish the alarm signal from the full 'Fire' operation.

When the operated device is restored to normal the **F16e** automatically resets that zone to 'Normal'.

If the cabinet door is closed with the **F16e** left in the 'Walk Test' condition, the buzzer sounds and a 'Door Interlock' Fault condition is signalled.

As an alternative to a full panel reset, **F1 (1 beep)** can be used to reset latched Fire zones and latched Faults only.

5.11 Alarm and Fault Tests.

Alarm and Fault Tests are initiated by means of the **EVAC/ZONE TEST** pushbutton, and zone selection by the **ZONE SELECT** pushbutton.

If any zone selection or tests are active, they are terminated when:

(i) the front panel door is closed.
(ii) a genuine alarm occurs.
(iii) 45 minutes has elapsed since the last test was started.

5.12 F2 / Global LED and Zone Test (SW5).

This test is initiated by pressing pushbutton **F2** on the Master PCB (the buzzer beeps) when no zone is selected. The sequence of events is:

(i) all latched faults are cleared.
(ii) the 'Fault' relay is switched OFF for 5 seconds. See (v) below for 'Fire' relay testing.
(iii) all front panel LEDs and zone 'Alarm', 'Fault' and 'Isolate' LED's sequentially light for approximately 0.5 seconds each for index and LED checking purposes.
(iv) on termination of the LED test, all zones are tested in sequence for correct operation and the system is restored to 'Normal'.

During this test each of the zone inputs must reach a specified voltage level. If the value is not recognised by the system, a 'Fault' signal is generated and the corresponding zone fault LED adjacent to the zone connector latches ON.

(v) holding **F2** on for 2 seconds (until the second beep) activates the 'Fire' and 'Bell' relays instead of the 'Fault' relay for 5 seconds in Step (ii) above.

5.13 Zone Alarm Test.

An 'Alarm' test is carried out on a zone that has been selected using the **ZONE SELECT** pushbutton.

The test is initiated by holding the **EVAC/ZONE TEST** pushbutton down for 2 seconds (until the buzzer sounds). The selected zone is put into the 'Alarm' state and the output functions programmed for that zone are performed. Pressing **EVAC/ZONE TEST** again momentarily (the zone still selected) removes the 'Alarm' from the zone. Multiple zone alarms may be selected for simultaneous operation.

5.14 Zone Fault Test.

A 'Fault' test is carried out on a zone that has been selected using the **ZONE SELECT** pushbutton.

The test is initiated by holding the **EVAC/ZONE TEST** and **ZONE SELECT** pushbuttons down simultaneously for 2 seconds (until the buzzer sounds). **ZONE SELECT** should be pressed just before **EVAC/ZONE TEST.** The selected zone remains in 'Fault' until the keys are released, and then restored to 'Normal'.

5.15 F3 / Internal BCO (SW6).

Switch **F3 / Int BCO** has two functions:

(i) Internal Bell Cut-Off
(ii) F16e Configuration

5.16 Internal Bell Cut-Off.

The Internal BCO facility is toggled ON and OFF by alternate momentary (less than one second) pushes of the PCB mounted pushbutton switch **Internal BCO** (**F3**). The buzzer sounds once and the Internal BCO LED (LED21) illuminates (or extinguishes) toggling the function ON or OFF

With Internal BCO enabled, External Bell and Warning System relays and the Buzzer will not respond to 'Fire' conditions, enabling other parts of the system to be tested without disturbing the building occupants. The **EXT BELL ISOLATE** and the **WARN SYS ISOLATE** LEDs flash when BCO is active.

If the cabinet door is closed with the **Internal BCO** active, the Buzzer sounds and a 'Fault' condition is signalled.

The **Internal BCO** status is stored (in EEPROM) so that the BCO status is not changed during power down or system reset.

5.17 Configuration.

If **F3** is held ON for more than one second, until a second beep sounds, Configuration Mode is activated (refer to Section 4: Configuration).

5.18 External Evacuation.

External Evacuation is activated by pressing **EVAC/ZONE TEST** with no zone selected. This allows the sounders (External Bells and Warning System) to be manually activated.

Only the sounders are activated; the brigade is not signalled.

This evacuation input can be overridden selectively:

(i) for External Bell operation by **EXT BELL ISOLATE**

(ii) for Warning System operation by **WARN SYS ISOLATE**

(iii) for both External Bell and Warning System operation by **INTERNAL BCO**.

5.19 Zone Extension Board.

This board enables the **F16e** to be increased in size by 8 zones per board to a maximum of 32 zones.

The Extension board has all the zone functions of the **F16e** Master board but does not have the Bell relay, power supplies, signalling relays or switches of the Master board.

The Extension board connects to the Master board by means of a serial data link. The number of extension boards connected (0-3) is selected when programming the system configuration. If the number of Extension boards connected does not correspond to the number selected, a fault (Extension boards) occurs. This fault is indicated and latched by **D9** of the System Fault/Programming Mode bank of indicator LEDs. The **SYSTEM FAULT** LED also flashes.

If an Extension board has an internal fault, the panel goes into 'Fault', and the fault type is signalled by the LEDs on the Extension board (see Section 5.20: LED Fault Indicators.).

5.20 LED Fault Indicators.

LED Fault Indicators are provided for the following functions:

(a) **ZONE** fault indicators: are located adjacent to each circuit input connector, both on the Master board and on the Extension boards.

- these indicators latch although the 'Fault' signal itself is non- latching.

(b) **BELL FAULT** LED: this indicator latches if the monitored Bell circuits are either open or short-circuit.

Fault	Flash Pattern
No Sounder circuits faulty	No flash
Warning System circuit fault	Long - Short
External Bell circuit fault	Short - Long
Both Sounder circuits faulty	Long - Long

Table 5.1: Decoded Bells Fault: LED17; D1

(c) **BATTERY FAULT** LED: a Battery Fault condition is signalled and this indicator latches if there is a problem with either the battery or the charger voltage.

- the Charger falls below 26Vdc
- the Charger exceeds 28.8Vdc
- the Battery falls below 23Vdc
- the Battery falls below 24Vdc for longer than 45 minutes.

While the fault exists, the Fault and/or Charger LED is illuminated.

Fault	Flash Pattern
No Battery or Charger Fault	No flash
Battery Absent or Faulty	1s ON/OFF
Battery Low, Mains Absent	0.4s ON/OFF
Mains Fail or Charger Fault	Short flash every 2 seconds

Table 5.2: Decoded Battery Fault: LED17; D2

(d) **SYSTEM FAULT** LED: this indicator flashes and latches in the event of a system fault.

The event or events giving the fault are indicated by **LED17; D1, D2** above and **D3** to **D8**. These indications are steady, but also latch.

LED	Fault Description
LED17; D3	Memory or Shift Register fault
LED17; D4	LED Display fault
LED17; D5	Door Time-Out fault
LED17; D6	External fault
LED17; D7	ACF fault
LED17; D8	Earth fault
LED17; D9	Extender Board fault
LED17; D10	Mimic fault

Table 5.3: Fault Indication: LED17; D3-D10

(e) **Extender Board LED: t**his indicator flashes and latches in the event of an Extender fault.

If there is no (latched) fault, the LED flashes briefly when the Extender board is polled by the Master.

If there is a fault, the LED flashes 5 times: a long flash signals a 'Fault' condition and a short flash indicates the 'Normal' condition.
The event or events causing the 'Fault' are:

Flash	Fault Description
First	Power Supply (nominal 27Vdc)
Second	Communications Interface
Third	tpic Chain
Fourth	Flash/Program Memory
Fifth	Configuration Memory

Table 5.4: Extender Fault Indication

5.21 Door Interlock (K16)

The cabinet door micro- switch is monitored by connector Ki16. It provides a 'Fault' signal and sounds the Buzzer if the door is closed when the Mains is OFF or with any of the following switches in the Off-Normal condition: Walk Test; Internal BCO; or if the Enable Configuration program link (**PROG EN**) is inserted.

After a 45 minute time out period the buzzer is silenced and global indication and transmission of the fault removed. The occurrence of the fault is latched by **LED17; D5** of the system fault array. The **SYSTEM FAULT** LED also flashes.

Provision is made for auxiliary switches to be wired into the door interlock warning system via the Door Interlock input.

5.22 Door Open Warning

The internal buzzer sounds for 3 seconds every 2 hours when the door is open. The first warning occurs 2 hours after the door is opened or after the system is Reset with the door open.

5.23 Earth Fault Detection

An Earth fault is reported via the **SYSTEM FAULT** LEDs when the insulation resistance is less than 5kΩ between any external circuit of the **F16e** (zones, sounder, External RS485) and Earth. Earth Faults may be displayed for Earth Faults between 5kΩ and 70kΩ but will not be detected if greater than 70kΩ.

5.24 Fault Buzzer.

The buzzer sounds when the system has detected a 'Fault'. The Buzzer may be silenced by momentarily pressing any key. The 'Buzzer On Fault' function may be disabled (or enabled) through the configuration program switches. (refer to Section 4: Configuration).

5.25 24-Hour Auto Test

Once every 24 hours the system automatically tests the detector circuits.

The entire test sequence takes less than 5 seconds for a 16-zone system.

'Fire' signalling is inhibited during this test so that any Zone 'Faults' do not generate false 'Fire' calls. If a 'Fault' is identified the fault signal is transmitted for as long as the defect lasts; and the appropriate Zone LED 'Fault' indicator latches. At the conclusion of the circuit tests the 1-Hour Power Down sequence is initiated.

If a 'Fire' or 'Fault' condition exists when the **24-Hour Auto Test** is due, or the panel is in **Walk Test** then the 24-hour test is not performed.

The 'Battery Fault' LED flashes briefly every 2 seconds to indicate Low Charger volts mode during the test.

5.26 Manual Start of 24-Hour Test (Firmware V1.32 onwards)

To activate a Manual 24-hour test proceed as follows:

Hold the door switch closed, and press AUTO TEST (F2) then release the door switch.

This does not influence the regular 24-hour test cycle.

To deactivate the manually activated 24-hour test hold the door switch closed, and press AUTO TEST (F2) then release the door switch.

To restart the 24-hour cycle at a given time, it is necessary to press the RESET switch to completely restart the panel.

5.27 Timer Power Supply

The **F16e** on-board switched mode power supply provides 27.4Vdc (temperature compensated) for system power and battery float charge purposes. The power supply has a 1.0A output capability and is short-circuit proof.

Reverse polarity protection is provided by fuses and a shunt diode.

The power supply has a 24-Hour timer test function which decreases the voltage to 22.0Vdc for a 1 hour period every 24 hours to verify correct system operation when powered only by the standby battery. If the battery voltage falls below 24.2Vdc during the 1 hour test period a 'Fault' signal is generated and the Battery Fault LED is illuminated.

NOTE! The float voltage setting is factory preset and should not be adjusted.

5.28 Mains Indicator

The Mains Indicator LED is ON when the Mains supply is connected.

If the Mains is not present for more than 8 hours, the panel enters the 'Fault' state.

5.29 Battery Capacity

The **F16e** cabinet accepts two 12V, 18AH sealed lead-acid (Gel-Cell) batteries.

Approved Batteries:

Manufacturer	Part Number	Description
Auscell	CJ12-7	12V, 7AH
Auscell	CJ12-12	12V, 12AH
Auscell	CJ12-18	12V, 18AH

The formula for calculating battery size is:

Ampere-Hours required: **$AH = (24 \times I_Q) + (0{\cdot}5 \times I_A)$,**

where: I_Q = quiescent current, I_A = alarm current.

5.30 Charger Fault.

The Charger Fault LED activates when either the Mains supply is not connected, or when the charger is faulty, i.e. supply/charge voltage below 25.8Vdc or above 28.8Vdc.

5.31 Zone Alarm Outputs.

Zone alarm outputs are available at connectors **K17** and **K18**. Normally the FET outputs float high and pull low (less than 0.5V) when the respective zone is in the 'Fire' condition.

The outputs may be used for driving auxiliary LEDs or special **F16e** auxiliary relays - each FET output can sink 25mA, with a combined maximum of 100mA.

5.32 Zone Fault Indicators.

The Zone Fault LEDs latch the most recent fault that occurred at the corresponding zones.

The flash rate decodes the type of fault:

- M-input level below the datum:	slow flash	1s ON/OFF
- M-input level above the datum:	normal flash	400ms cycle
- M-input level above smoke level:	fast flash	100ms ON/OFF
- Alarm condition that has been reset:	steady ON	

During Start-up and Auto-test the Zone Fault LEDs indicate the zone being tested.

5.33 Brigade Interface Outputs.

Output drives for Fire1, Fire2, Valve Monitor, Battery Fault, Fault, and Isolate are available at connector **K11** for Brigade Monitoring purposes.

Battery Fault and Fault are pulled low (0.5V or less) in their 'Normal' state and float high when the faults are active.

The remaining outputs float high in their 'Normal' state and pull low (less than 0.5V) when the respective function is active. Each output can sink 25mA.

A special Monitor Interface board containing relays for each output is available for connection to **K11**. Provision has been made to mount this board on the **F16e** Master PCB.

5.34 Duct Probe Option.

Each zone can be configured for 'Duct Mode', with the following characteristics:

- when the input is active no Bells or Fire relays activate
- the zone output is active and the corresponding Alarm LEDs flash
- activation is non-latching, but de-activation is delayed
- when the input returns to 'Normal', the LEDs stop flashing and turn hard ON
- after 65s non-active, the output and the LEDs turn OFF
- optionally the ACF relay can be activated together with the zone output.

Configuration of Duct Probe mode is: (refer to Section 4: Configuration)

- in System programming mode press **F2** to select **LED17; D10** (spare)
- press **F3** to put the configuration into Circuit mode - initially this selects Zone 1
- press **F3** again to select the zone to be configured in Duct probe mode
- press **F1** to activate Duct mode for that zone, **F2** de-activates it

Selecting Duct mode automatically turns all options OFF

Turning Duct mode OFF automatically selects the default configuration for a circuit.

For further changes to this zone (or any other zone) return to System mode, select **D10** and press **F1** to turn Duct programming mode OFF.

5.35 Battery Calculation Examples.

Example 1. F16e 8 Zone with a 20 Watt Amplifier

Component	Quiescent Current (mA)	Alarm Current (mA)	A/Hrs
Master Board + Display Board	100	240	2.52
AFI Board	0	20	0.01
20 Watt Amplifier	0	1200	0.60
Total Ampere Hours			**3.13**
Recommended Minimum Capacity			**7Ah**

Example 2. F16e 16 Zone with a 50 Watt Amplifier + LED Mimic

Component	Quiescent Current (mA)	Alarm Current (mA)	A/Hrs
Master Board + Display Board	100	240	2.52
Extender Board	30	30	0.74
AFI Board (x2)	0	40	0.02
50 Watt Amplifier	75	2500	3.05
LED Mimic	10	20	0.25
Total Ampere Hours			**6.58**
Recommended Minimum Capacity			**12Ah**

Table 5.5: Battery Calculations

Further Configurations

Battery capacity for other examples can be calculated by adding the Ampere / Hour ratings for each component in the system. Use the following table.

Component	Quiescent Current (mA)	Quiescent Current (mA)
Master Board + Display Board	100	240
Extender Board	30	30
AFI Board	0	20
LED Mimic	10	20
20 Watt Amp	0	1200
50 Watt Amp	75	2500

Table 5.6: Current Values

6. DETECTOR AND MODULE COMPATIBILITY

Manual Call-Points and Heat detectors give a 'Fire' signal within 1 second of device activation.

Smoke detectors give a 2 second gated operation to eliminate false alarms due to transient conditions. (If AVF is selected for a zone, the gated operation is 20 seconds).

Note that Smoke detectors typically have 5.0 to 7.0 volts across them when activated and this voltage level must exist for activation to be recognised as Smoke detector operation.

An open circuit gives a 'Fault' signal.

6.1 Detector Limitations.

Detectors draw a small monitoring current and this places a limit on the number of devices, which can be connected to each zone.

The maximum detector load depends on the magnitude and stability of the standing current of the detectors.

Detector Description	Quiescent Current (µA)	Maximum Quantity
Hard contact devices (normally open, closing for alarm) such as Manual Call-Point (MCP) or electromechanical heat detectors	0	No Limit
System Sensor Model 1400 Ionisation or 2400 Photoelectric Smoke Detectors		40 per circuit
System Sensor Model 1100 Ionisation or 2100 Photo-electronic Low Profile Direct Wire Smoke Detectors		40 per circuit
System Sensor Model 1151 Ionisation or 2151 Photo-electronic Low Profile Smoke Detectors	40 to 85	40 per circuit
System Sensor Model 51A51 Type A Thermal Detectors **System Sensor** Model 51B51 Type B Thermal Detectors **System Sensor** Model 51C51 Type C Thermal Detectors **System Sensor** Model 51D51 Type D Thermal Detectors		40 per circuit
NOTES: **(i) These detector limits apply to F16e systems having v1.20 or greater firmware.** **(ii) Any mixture of System Sensor detectors must not exceed 40 per zone.**		

Table 6.1: Detector Limitations

7. INSTALLATION INSTRUCTIONS

Installation of the **F16e** must be performed by suitably trained and qualified personnel in accordance with the requirements of AS4428.1:1998

The following installation instructions are a guide to the successful installation and commissioning of an **F16e** Fire Alarm system.

7.1 Pre-Installation Check.

Before opening the **F16e** system packaging, inspect the packaging for external damage.

Remove the **F16e** from its packaging and inspect the cabinet for external damage.

Check that the cabinet key is attached to the top of the cabinet.

Open the cabinet and visually check that all circuit boards and other components such as the Mains transformer and cabling are firmly in place.

Check that all fuses on the Main PCB, the power supply and other auxiliary PCBs (where applicable) are in place, and have the correct value.

7.2 Panel Installation and Power Connection.

Install the cabinet to its assigned position.

Ensure that **F16e** is clean internally, and that no residual contamination such as metal filings is present.

Ensure that all monitored outputs are correctly terminated with an EOL resistor. (It is assumed that the zone and other external site wiring has been installed, but not connected to the **F16e**, at this point).

Ensure that a detailed plan and assignment table is available for each of the zones.

Connect the zone circuits to the **F16e**.

Before connecting other external wiring, install the Mains power (240Vac ±10%).

Do NOT connect the batteries.

Check that the system is correctly Earthed.

Apply the Mains power to the system, and observe that the **F16e** goes through its initialisation phase - this takes about 30 seconds.

A ‘Battery Absent’ fault will be detected.

Check correct operation of the zones.

Rectify any faults as required.

Connect the batteries and reset the system.

7.3 Other External Devices.

When the zone circuits have been successfully configured and tested, connect and test the sounders, (**External Bell** and **Warning System)**.

Connect and test the devices controlled by the **ACF** relay.

Connect and test any other devices that are a requirement of the system.

Test the brigade monitoring operation.

Test the system as a complete functional unit, testing all input and output devices.

8. MONTHLY TESTING

All testing and maintenance shall be performed by suitably trained and qualified personnel in accordance with the requirements of AS4428.1:1998

(a) After opening the Fire Alarm Control Unit cabinet, isolate the Sounders and the 'Brigade' transmitter to prevent 'Fire' and 'Fault' transmissions.

(b) Check that the voltage across the two 12V sealed lead-acid batteries is in the range 27.3Vdc to 27.5Vdc. Note that the float voltage is temperature compensated.

(c) Check that the voltage at the 'M+' terminal of the detector circuit is in the range 19.5Vdc to 20Vdc

(d) Test all alerting devices and indicators for correct operation - refer to the particular detector information to determine how to test activate a detector.

(e) Activate a detector or call-point on each circuit and observe the operation of the corresponding 'Fire' condition

(f) Check the operation of the Sounder circuits

(g) After test completion, all results should be entered into the system logbook.

(h) Ensure that the system is fully reset to 'Normal' and restore the buzzer silence and Isolate switches to 'Normal' before closing and locking the cabinet door.

9. DATUM LEVELS

Figure 9.1 depicts the regions for the M-value voltages, and the transitions required from the datum for various 'Fault' and 'Fire' situations.

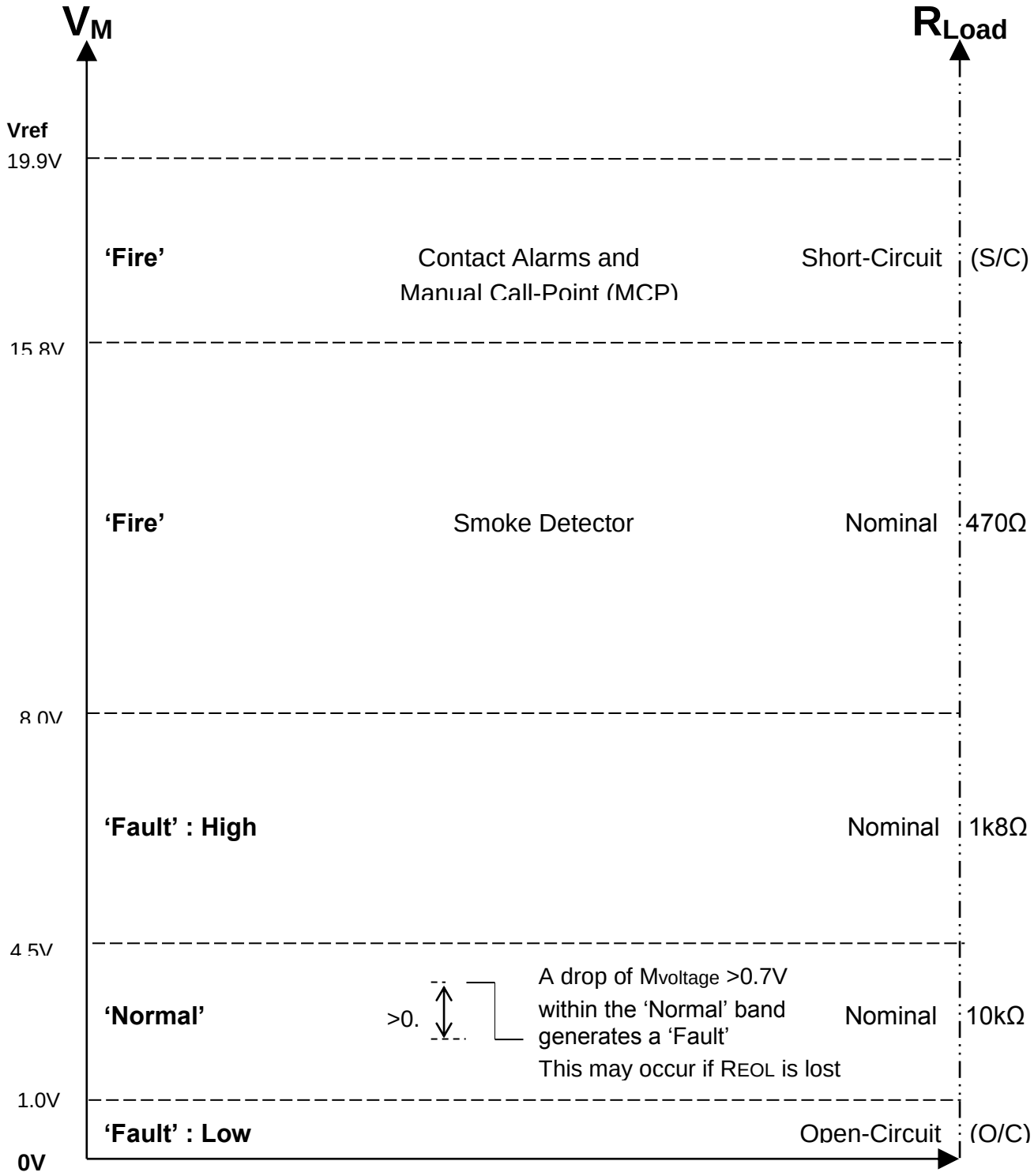

Figure 9.1: M-Value Voltage Bands (Vref = 20.0Vdc – Nominal)

10. ORDERING INFORMATION AND SPARE PARTS

10.1 Ordering Information

Item	Part Number	Notes
F16E - 19" Conventional 8 Zone Panel with 50 Watt Amplifier. Rack Cabinet Size: 750 x 550 185 (H x W x D)	F16E19EA	Includes 8 zones of Conventional Circuits 1 x 8 AFI Module 50W Amplifier PSU
F16e basic 8 zone system Cabinet Size: 600 x 450 150 (H x W x Dmm)	F16E0.6	Includes 8 zones of Conventional Circuits 1 x 8 AFI Module PSU
F16e Extender Module	F16EEXT	Additional 8 Conventional Zones
F16e AFI Display	F100AFI	Additional AFI displays

Table 10.1: Ordering Information

10.2 Spare Parts

Item	Part Number
F16e Master Board	F16EMBAUS
F16e Extender Board	F!6EEXT
F16e Power Supply 27.4Vdc, 1 Amp	F16PSU
F16e AFI Display	F100AFI
F16e Display Board	F16EDISPLAY

Table 10.2: Spare Parts

10.3 Fuse Replacement

Fuse Number	Rating and Type	Part Number	Function
1	5A Blade Fuse	FUBL5A	External Bell : Positive Leg
2	5A Blade Fuse	FUBL5A	Warning System : Positive Leg
3	15A Blade Fuse	FUBL15A	Main Board : Negative Leg
4	3A Blade Fuse	FUBL3A	Main Board Control Circuitry: Positive Leg
5	10A 3AG	FU3AG10A	Battery Safety Fuse : Inline fuse. - located between PSU and Battery Bank

Table 10.3: Fuse Replacement

11. DIAGRAMS

11.1 F16e Board Layout

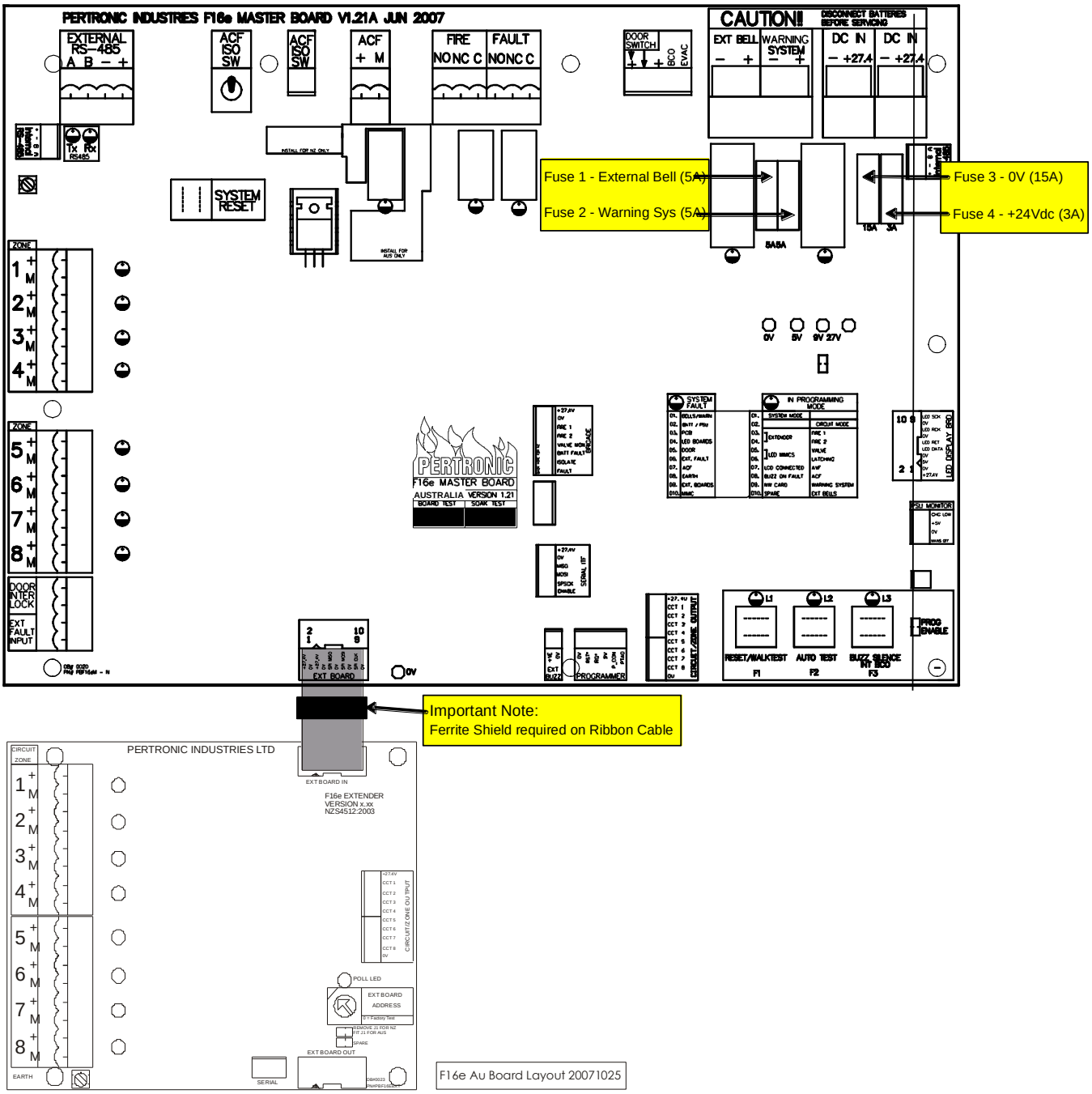

Figure 11.1: F16e Board Layout

11.2 F16e System Wiring

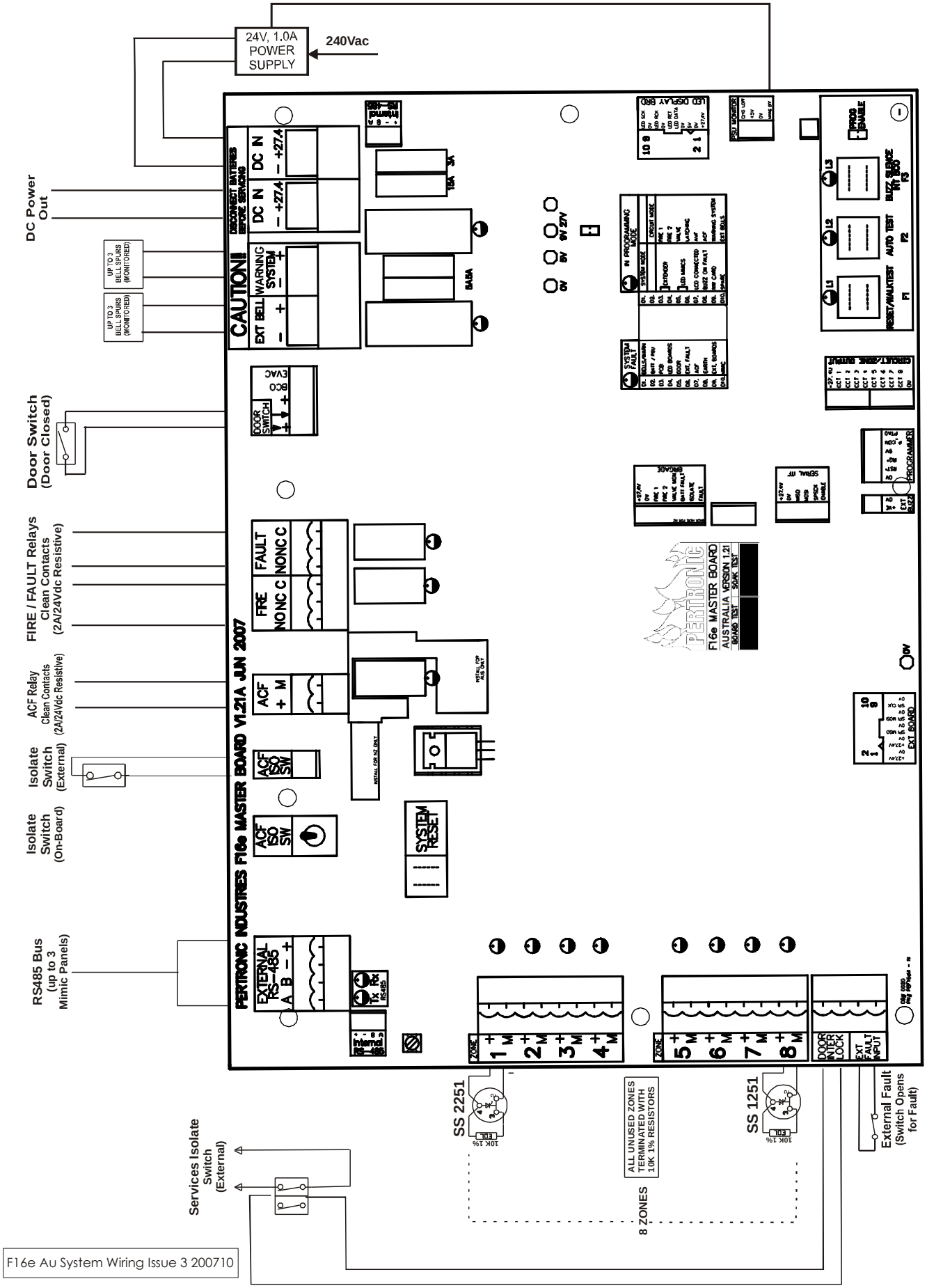

Figure 11.2: F16e System Wiring

11.3 F16e LED / Relay Drive Circuit.

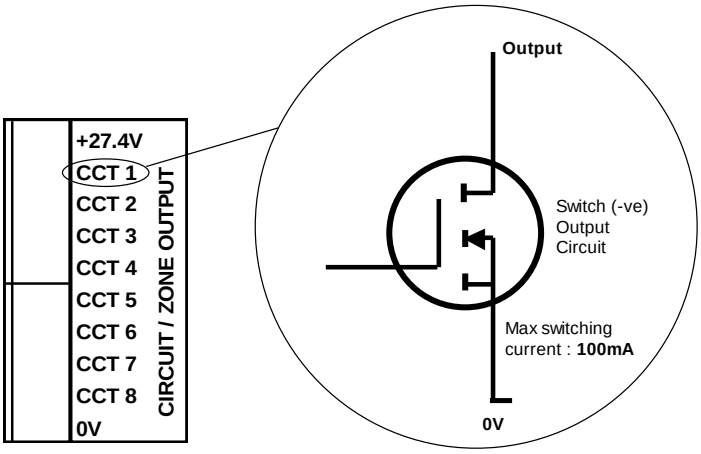

F16e LED / Relay Drive Circuit Issue 1_18APR2005

Figure 11.3: F16e LED / Relay Drive Circuit

11.4 F16e Connector Pin-Out.

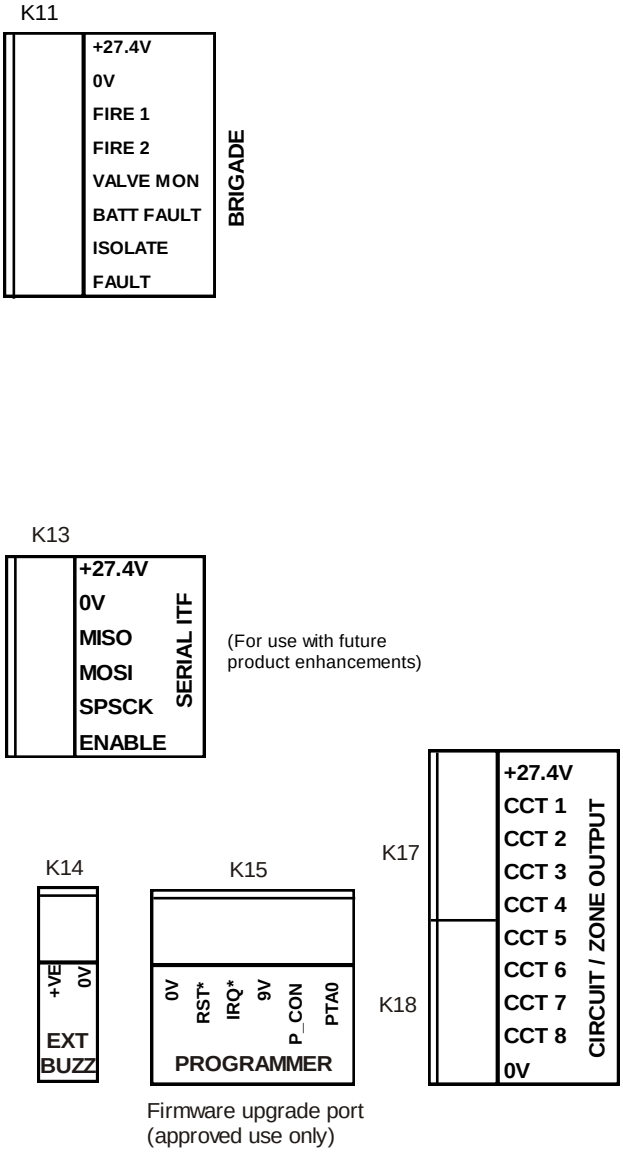

F16e Australia Connector Pin-outs Issue 1_18APR2005

Figure 11.4: F16e Connector Pin-Out

11.5 F16e Extender, Keyboard and AFI Wiring.

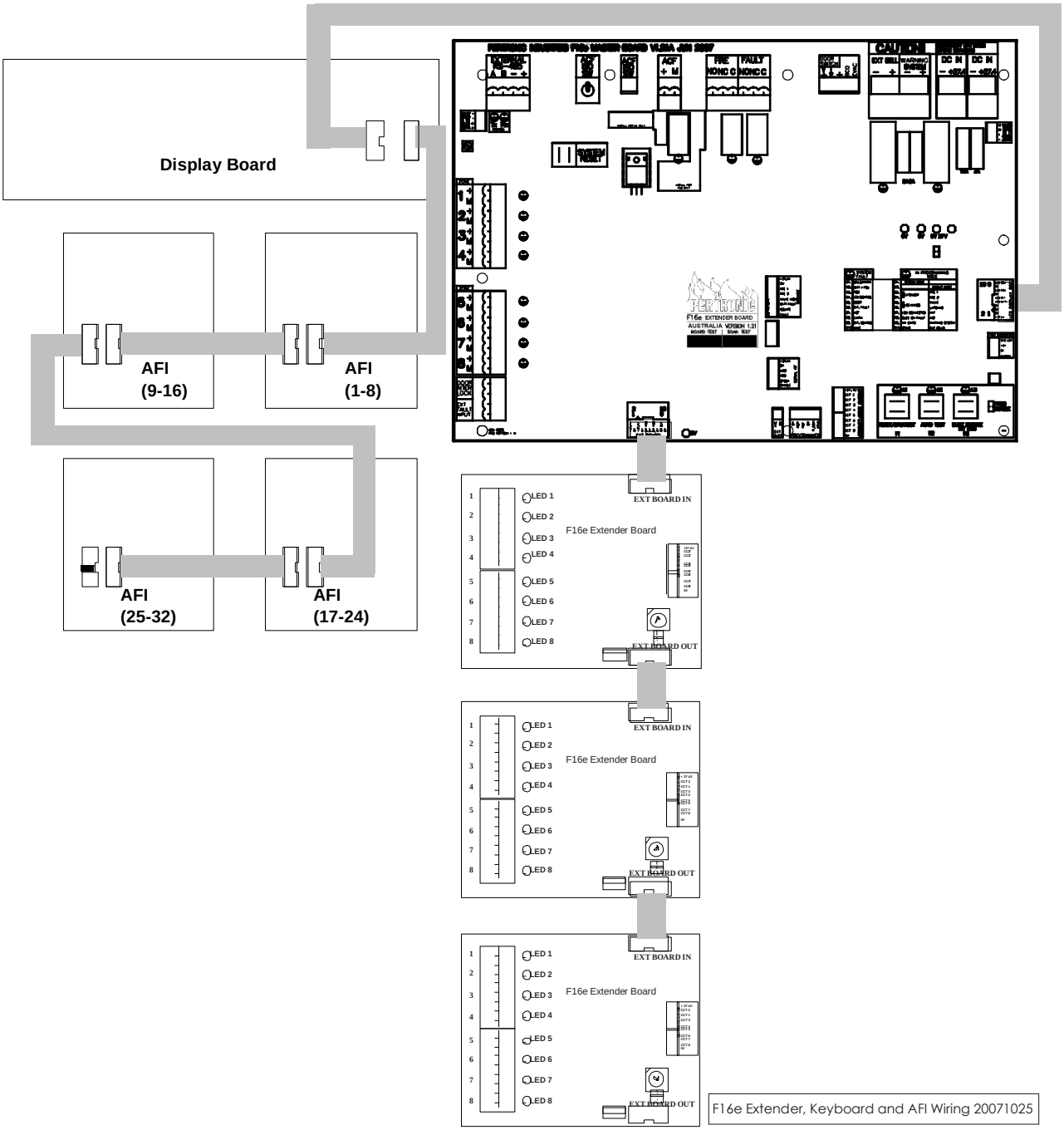

Figure 11.5: F16e Extender. Keyboard and AFI Wiring

11.6 F16e Detector Wiring.

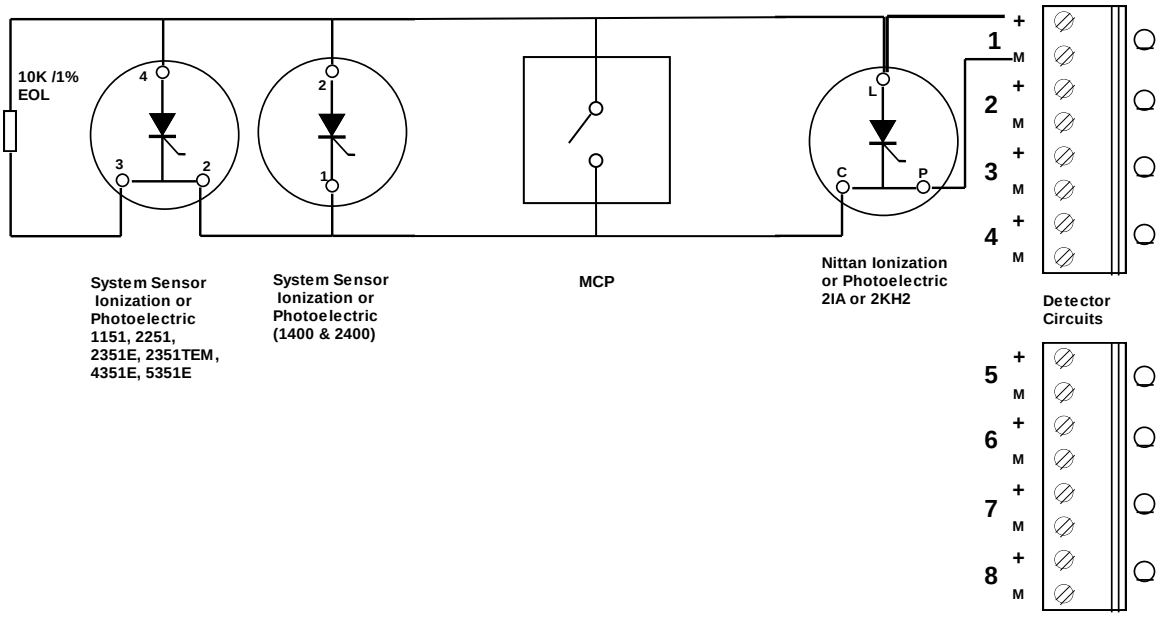

Figure 11.6: F16e Detector Wiring

11.7 F16e Sounder Wiring.

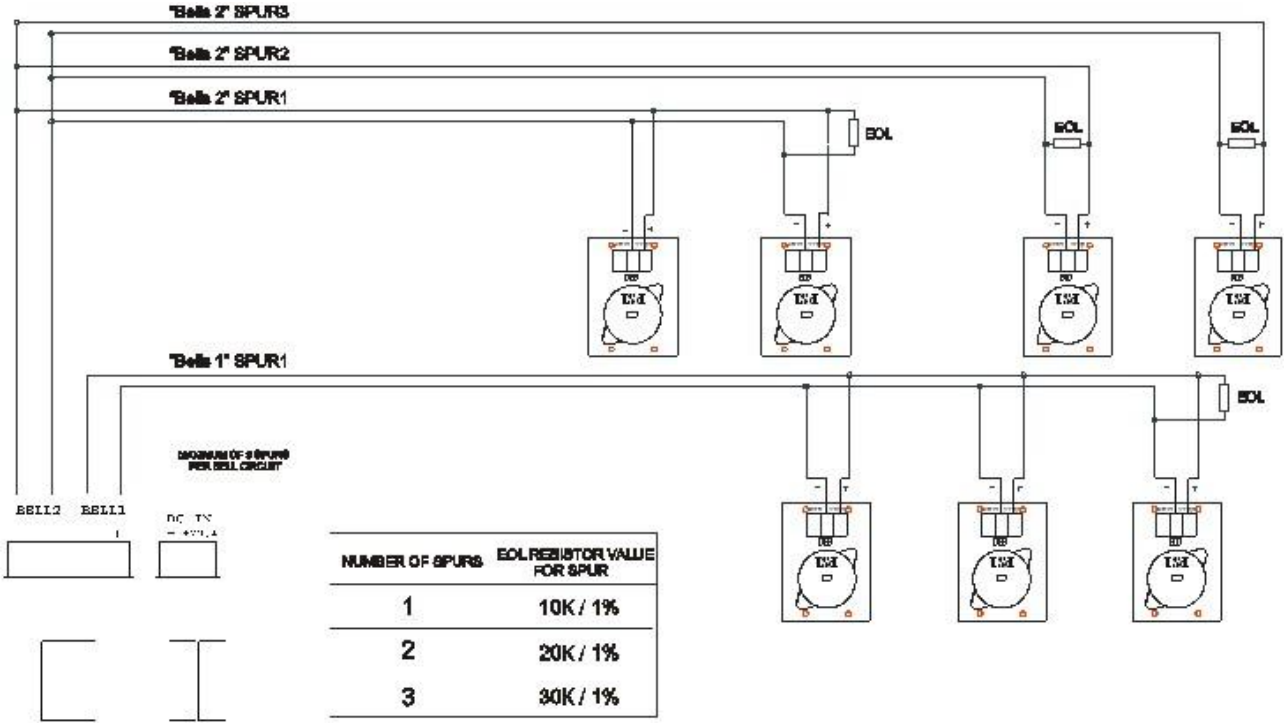

Figure 11.7: F16e Sounder Wiring

11.8 F16e Amplifier Connections.

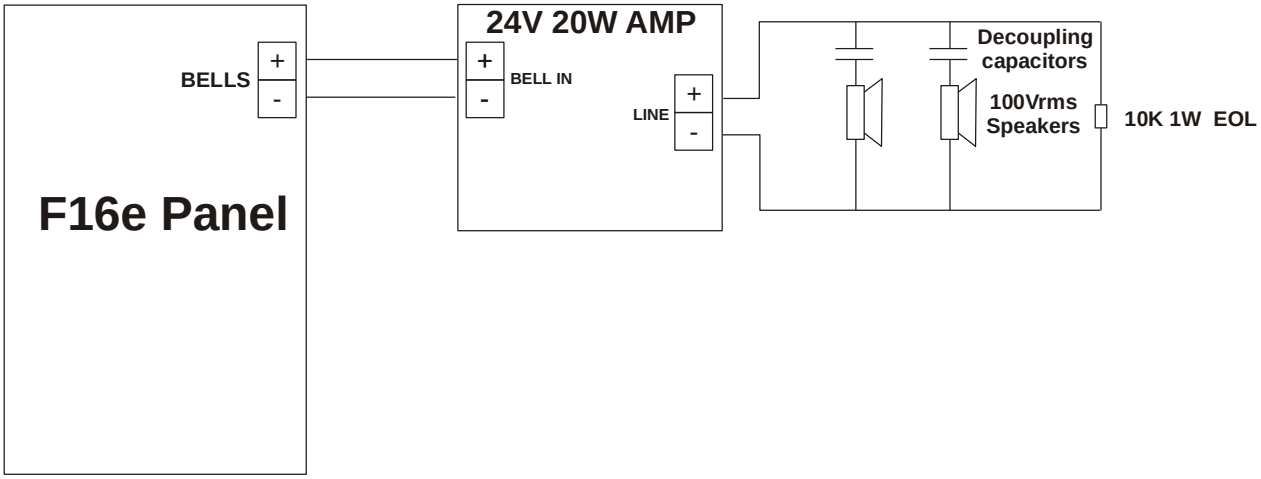

Figure 11.8: Pertronic 20W Amplifier Connection

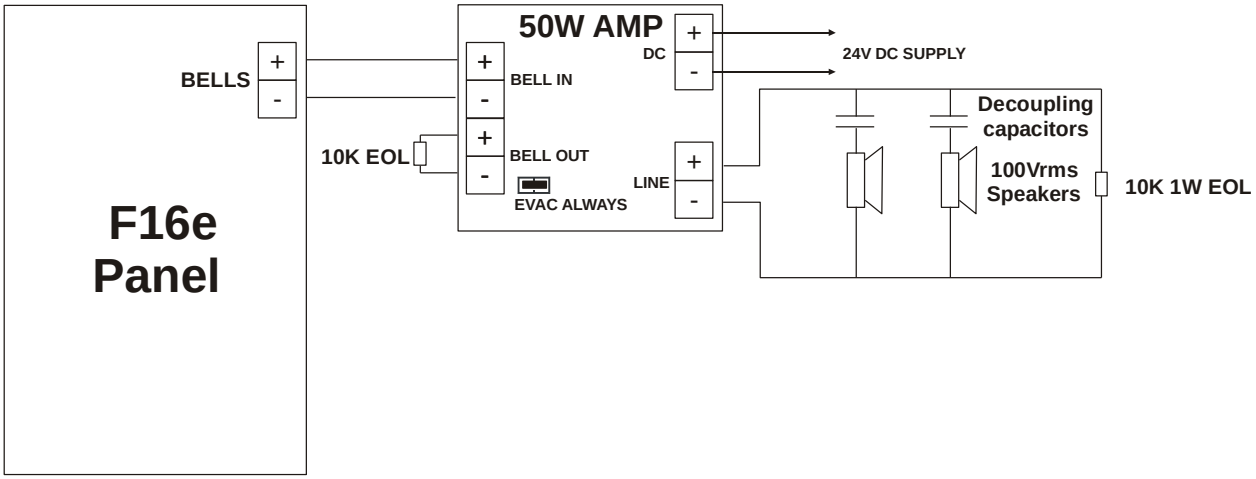

Figure 11.9: Pertronic 50W Amplifier Connection

11.9 F16e Zone Alert.

This example illustrates 4 zones of Alerting devices.

If <u>all zones are programmed for 'Alert' operation</u> then the example operates as follows:

a) operation of the Evacuation switch operates 'Evacuate' in all zones

b) any zone in 'Alarm' operates the 'Evacuate' for that zone and 'Alert' for all other zones

Note: The 'Evacuate' input control always overrides the 'Alert' input control.

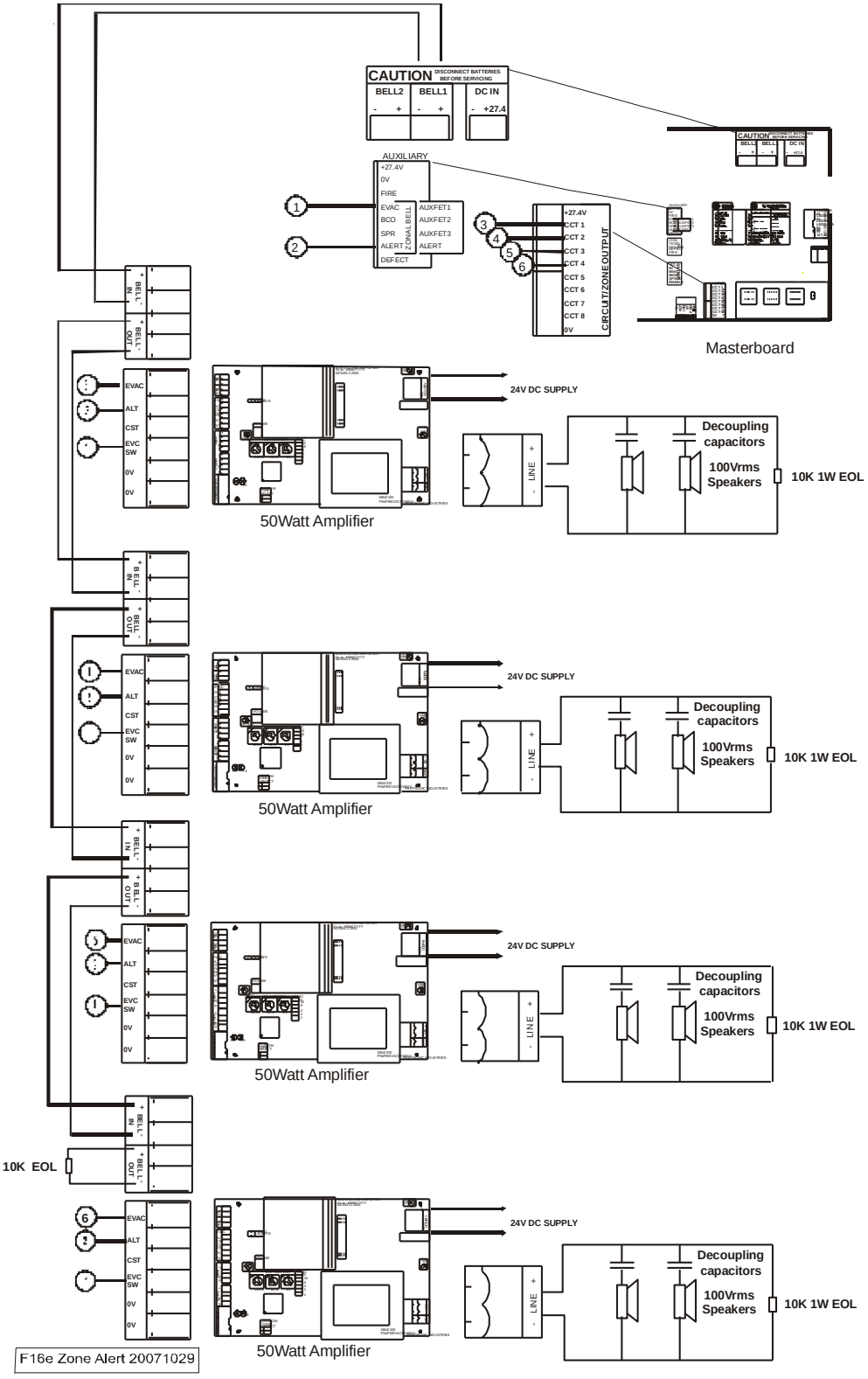

Figure 11.10: Zone Alert Wiring

11.10 Cabinet Dimensions

19” Cabinet

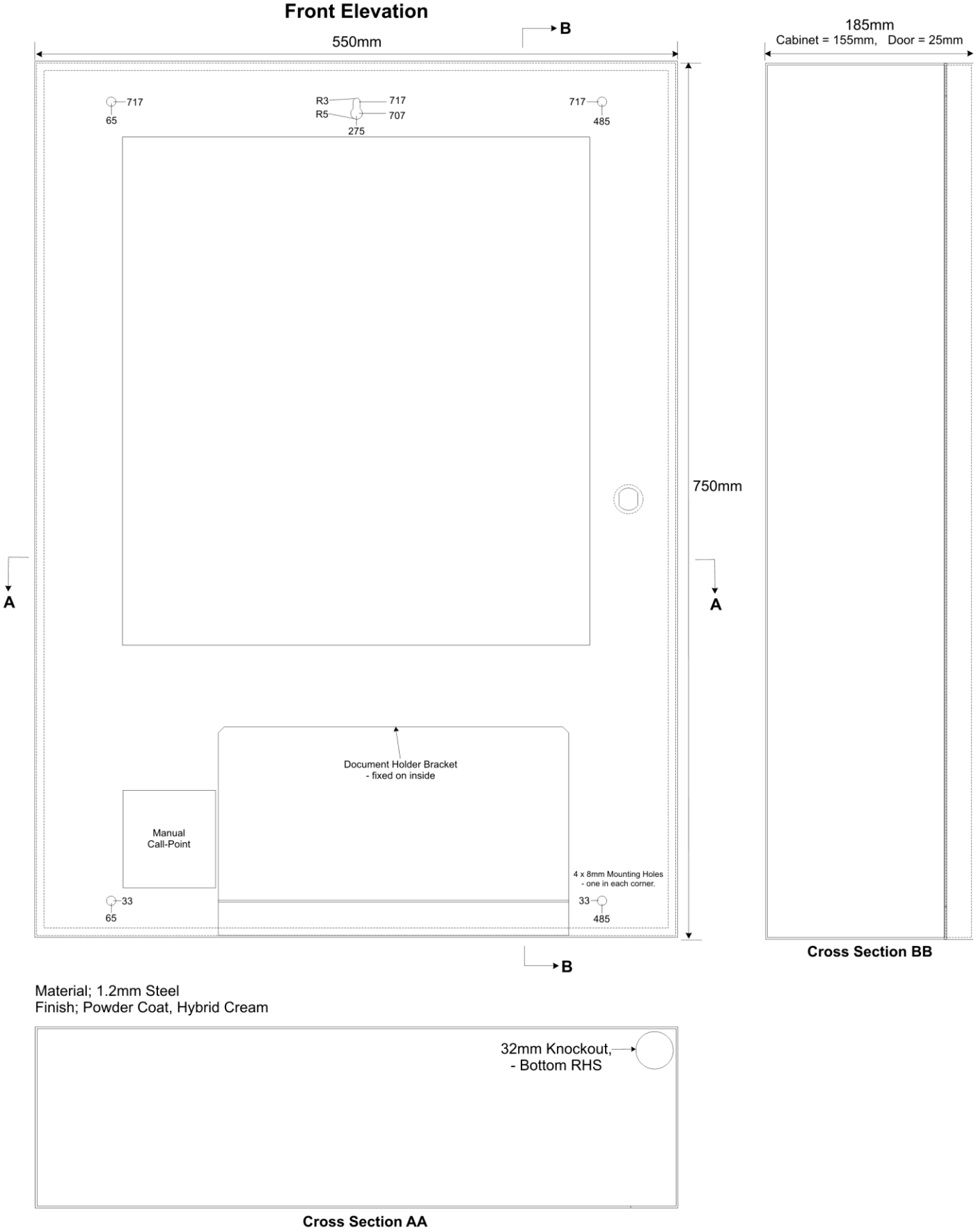

Figure 11.11: Cabinet Dimensions

12. CONFIGURATION RECORDS

F16e CONFIGURATION RECORD	
Site:	
Installer:	
Date:	

SYSTEM OPTIONS								
	None	1	2	3			ON	OFF
Extender Boards:						Buzz on Defect:		
LED Mimics:								

	Details
Sounders:	
Amplifiers:	

CIRCUIT / ZONE OPTIONS									DETECTORS		
Zone / Circuit	Fire1	Fire2	Valve	Latch	AVF	ACF	Warning Sys	External Bells	Heat	MCP	Smoke
1											
2											
3											
4											
5											
6											
7											
8											
9											
10											
11											
12											
13											
14											
15											
16											
17											
18											
19											
20											
21											
22											
23											
24											
25											
26											
27											
28											
29											
30											
31											
32											

Document Change History

Date	Issue	Changes / Notes
	1-6	History not recorded in this document
26/09/2003	7	Change note #307
17/02/2004	8	Minor corrections. Document change History added. Fig 1.1 updated
1/10/2004	9	Minor updates throughout. Block diagram and layout updated with new extender. Added M levels diagram.
22/02/2005	10	Inserted 4.6 (time out); 5.21 duct mode (+ ch 4 updates); corrected 5.27.
03/05/2005	11	Battery examples; added drawings & configuration records (GT)
06/11/2009	12	Updated in accordance with AS4428 requirements (BB)
03/09/2010	13	Rewrite of Configuration instructions (AvV, HB) Correction 24 hour eol test 5.25
01/03/2013	14	CN 1598. Added Manual Start of 24-hour test. (RDB)
13/7/2015	15	Updated Firefighter graphic. (RDB)