PERTRONIC
FAN CONTROLLER
(AS/NZS1668:1998)
USER MANUAL
AUSTRALIA

Valid For Fan Controller System:

Fan Control Unit PCB Hardware:	**v2.01**
Firmware:	**v3.03 and greater**
Hardware:	**v2.02**
Firmware:	**v4.00 and greater**
Fan Relay Unit PCB Hardware:	**v2.10 and greater**
Firmware:	**v2.10 and greater**
Hardware:	**v2.20 and greater**
Firmware:	**v4.00 and greater**
Fan Reset/Isolate Unit PCB Hardware:	**v1.30 and greater**

Issue 9.2

The contents of this manual are copyright.

This document is to be used only for operating Pertronic Fire Alarm systems.

This document is not to be reproduced, photocopied or passed in part or whole to a third party without the express, written authorisation of Pertronic Industries Ltd

Acronyms:

ATS	Alarm Transport System	Provides connection to the NZ Fire Service for 'Fire' alarms and agents for fault alerts, via the Telecom ATS service.
AVF	Alarm Verification Facility	A facility designed to minimise 'false alarms' by ensuring multiple operation of smoke detectors before the alarm is raised.
BCO	'Bells' Cut-Off	Two switches to isolate and inhibit the 'Bells' (Sounder) outputs. **Internal BCO** PCB fitted 'isolate' switch for use by Fire Alarm Company maintenance staff. **External BCO** Cabinet mounted 'isolate' switch for use by Fire Service and/or management staff.
DBA	Direct Brigade Activation	Fire Sprinkler system.
EOL	End of Line	An End of Line load (10kΩ Resistor) used to monitor the presence and integrity of the detector and sounder circuits.
SGD	Signal Generating Device	Interface to the ATS system.
FCU	Fan Control Unit	

© Pertronic Industries Ltd

CONTENTS

1. INTRODUCTION 1
   - 1.1 Functional Description 1
2. SYSTEM COMPONENTS 4
   - 2.1 Pertronic Analogue Addressable Panel 4
   - 2.2 Fan Control Unit 4
   - 2.3 Fan Relay Unit 5
   - 2.4 Fan Isolate/Reset Unit 5
   - 2.5 Fan Reset Unit (alternative) 6
   - 2.6 Fan Control Switch 6
   - 2.7 Building Services Interface 7
3. INSTALLATION and OPERATION 8
   - 3.1 Addressing and Mapping 8
   - 3.2 Air Vent and Duct Smoke Detectors 8
   - 3.3 Clean Air / Smoke Exhaust-Pressurisation Selection 9
   - 3.4 Mode Switch Group Operation 9
   - 3.5 Latching Mode 9
   - 3.6 Fan Controller Isolation 9
4. FAN CONTROLLER OPERATION 10
5. DIAGRAMS 11
   - 5.1 Fan Controller System Connections 11
   - 5.2 Typical Fan Relay Unit Connection 12
   - 5.3 Optional Fan Relay Unit Connection 13

PERTRONIC SALES AND TECHNICAL SUPPORT 15

Figures

Figure 1-1: Basic System Layout 1

Figure 2-1: Building Services Interface 7

Figure 3-1: A Fan Control System example 8

Figure 5-1: Fan Control Unit System Interconnection 11

Figure 5-2: Fan Relay Unit connections 12

Figure 5-3: Fan Relay Unit connection with mechanical board 13

TABLES

Table 2-1: Fan Control Switch Operation 6

Table 4-1: Exhaust link function and action of the Fan Relay 10

Table 4-2: Latch link 10

Table 4-3: Fault LED Indication 10

Table 4-4: Door Interlock link 10

© Pertronic Industries Ltd

1. INTRODUCTION

1.1 Functional Description

The Pertronic Fan Controller is used by Pertronic addressable fire alarm systems to monitor and control the fans used for clean air, stairwell pressurisation, smoke exhaust and other purposes; it is designed to comply with the requirements of AS1668.

The Fan Controller is easily set up and incorporated into a Pertronic addressable fire alarm system. The Controller's simplicity of design and operation, coupled with its microprocessor based solid-state circuitry, makes the unit flexible and reliable.

The Fan Controller is used to turn normally running fans OFF, or to turn normally idle fans ON through a building services interface. The system consists of two required and two optional modules:

- The **Fan Control Unit** is required and is usually mounted at the fire alarm panel. It incorporates a mode switch (OFF, AUTO, ON); fan status indicator LEDs (OFF, FAULT, ON); and the timing and control functions required. The Fan Control Unit may be operated in latching or non-latching modes (jumper selectable on the Unit).
- The **Fan Relay Unit** is required and is usually located near the fan at the building services interface. It directly interfaces to and controls the building services fan relays. The Fan Relay Unit also reports back the status of the fan to the Fan Control Unit.
- The **Isolate/Reset Unit** is an optional module used to isolate groups of Fan Controllers and to reset latched states in unlatched Fan Controllers. The Isolate/Reset Unit may also be used to initiate a Lamp Test for the group of Controllers connected to it. An off-normal Fan Control switch interlock output to the panel is provided. This unit is mandatory when a Door Interlock function is required, since Fan Control Switch Units cannot signal interlock directly to the panel.
- The **Fan Control Key-Switch** is an optional key-switch module used to Isolate/Enable the switches on the Fan Control Unit. The Fan Control Switch does not influence the operation of the fans, but prevents tampering with the Fan Control Unit and Fan Isolator/Reset Unit.

The Control and Relay units are linked together by the addressable loop and the fire panel. The two modules must be on the same loop.

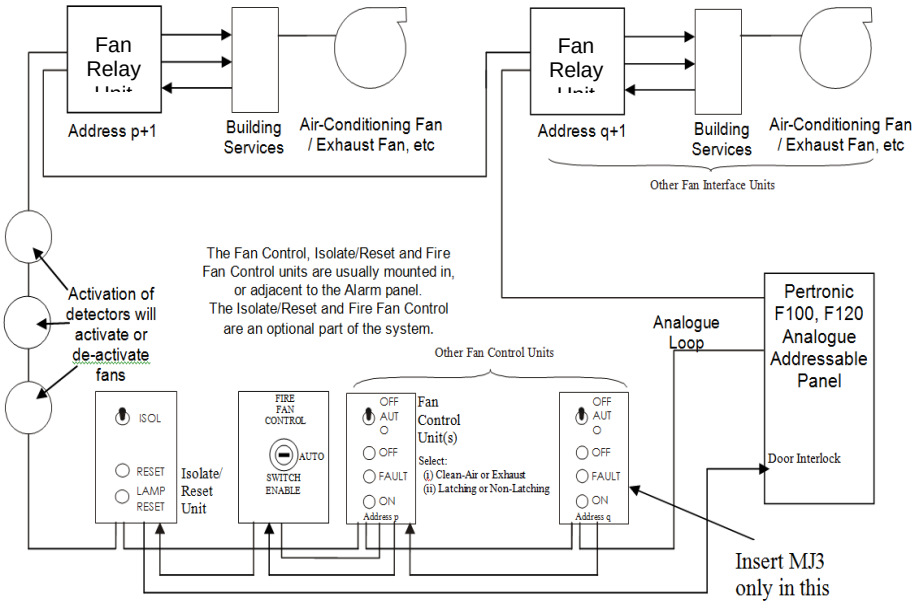

Figure 1-1: Basic System Layout

Note: Installation and configuration should be undertaken in conformance with the requirements of AS/NZS 1668.1

© Pertronic Industries Ltd

1.2 Specification

Dimensions

Fan Control Unit	35 x 85 x 50 (W x H xD mm, usually mounted in the fire alarm cabinet.
Fan Relay Unit	107 x 70 x 40, PCB with mounting holes.
Fan Isolator/Reset Unit	35 x 85 x 50, usually mounted in the fire alarm cabinet.
Fan Control Switch	60 x 85 x 40
	These units may be mounted into a 130 x 130 x 75mm ABS Enclosure.

Power Requirements

Fan Control Unit	10mA (one LED ON), loop powered.
Fan Relay Unit	3mA, loop powered.
Isolate/Reset Unit	9mA, loop powered.

Controls and Indications:

Fan Control Unit	Three position mode switch:
AUTO	Fan Controller operation is initiated by the state of the fire panel detectors and controls.
OFF	The fan is turned OFF
ON	The fan is turned ON
	Indicator LEDs:
FAN OFF	Indicates that the fan is OFF
FAN FAULT	Indicates that a fan fault has occurred
FAN ON	Indicates that the fan is ON
	Jumpers:
Exhaust (MJ1)	Insert for exhaust/ pressurisation fan systems. Remove for clean air fan systems.
Latch (MJ2)	Insert to operate in latching mode.
Door (MJ3**)**	Insert only in the unit most remote from the Isolate/Reset unit (required) when ‘Door Interlock’ is used—see figure 1.1.
Fan Relay Unit	Control relays:
Fan ON	24Vac, 2A clean NO/NC contacts. Energized for fan ON.
Fan OFF	24Vac, 2A clean NO/NC contacts. Energized for fan OFF. Fan OFF over-rides Fan ON Monitored input: 10kΩ across input: ‘Fan Normal’, normal OFF condition Open-circuit input: ‘Fan Fault’ condition Short-circuit input: ‘Fan ON’, normal running condition.
Isolate/Reset Unit	Two position switch:
Isolate	[UP] Normal operation with Fan Relay Unit responding to Fan Control Unit.
	[DOWN] Connected Fan Control Units ignore mapped detector activations, and revert to the selected manual state. Push buttons:
Reset	Resets any latched states of connected Control Units.
Lamp Test	Connected Fan Control Units enter ‘Lamp Test’ sequence. The Lamp Test stops after 20 seconds, or when Reset.

© Pertronic Industries Ltd

Door Interlock	Connect the 'local' door interlock output to the next Fan Control Switch Unit's door interlock input and from the last output to the local door interlock input of the Isolate/Reset unit using a single wire (all devices to be on the same serial line). Note the requirement for MJ3 above.
K4	The relay contact output K4 (connected to the panel's door interlock input) is closed when power is applied provided the switches of all the connected Fan Control Units are in the Auto position. The contact opens when any switch, including the Isolate Switch, is off-normal.
Fan Control Switch	Two position key-switch:
Auto	[Horizontal] Normal operation with the Fan Relay Unit responding to the Fan Control Unit.
Switch Enable	[Vertical] Over-rides the Fan Control Unit and turns the Fan Relay Unit ON
Clean Air Turn ON Delay	Subsequent to a Reset or the shutdown of a clean-air fan in AUTO mode, the fan will not be turned back on, until the associated clean-air detectors have been smoke-free for 65 seconds.
Duct Detector Delay	When a duct smoke detector, which is mapped to a Fan Control Unit becomes active, the Fan Relay Unit will energise the "Fan Stop" relay. When the duct detector has been free of smoke for 65 seconds, the "Fan Stop" relay de-energises.
Addressing	Each Fan Control and Fan Relay Unit pair (controlling one fan) use two consecutive addresses in the module address space. The Fan Control Unit has the lower address (5, for example), and the Fan Relay Unit must be set at the next higher address (in this case, 6).
System Capacity	Up to 25 Fan Control / Interface pairs can be installed on each loop. The current drain is 13mA per pair.
Multiple Control Option	A group of fans may be controlled by one mode switch on a Fan Control Unit. Each fan will have a Fan Control Unit with its indicator LEDs, but only one Fan Control Unit of the group will have the Mode switch, which controls all the units within the group.

© Pertronic Industries Ltd

2. SYSTEM COMPONENTS

2.1 Pertronic Analogue Addressable Panel

A Pertronic analogue addressable panel includes the Fan Controller system in two main units:

- The Fan Control Unit is usually mounted in the Pertronic panel chassis
- The Fan Relay Unit is usually installed near the building services control equipment.

To configure the Fan Control system requires: accurately mapping the functions required (see chapter 3), properly addressing the loops involved, and carefully defining the device type for each address.

A Fan Control Unit and its matching Fan Relay Unit must be on the same analogue loop; however, the activating smoke detectors may be on different analogue loops. The address of the Fan Relay Unit must be the next-higher address above that selected for the Fan Control Unit.

The Fan Isolate/Reset Unit provides a Master Fan Reset facility, which is required by some applications. This unit is directly connected to one or more FCU's.

2.2 Fan Control Unit

The Fan Control Unit is the user interface to the fan control operation. It commences fan control operation when it receives a signal from the Fire Panel that the smoke level at the detectors has changed to the 'Alarm' state, for smoke exhaust operation, or from the 'Alarm' state to 'Normal', for clean air operation. Commands are sent to the Control Unit's Fan Relay Unit to turn a Clean Air fan ON or a Smoke Exhaust/Pressurisation fan OFF.

The Fan Control Unit is an analogue loop operated device and has address selection switches for selecting addresses 1 through to 98.

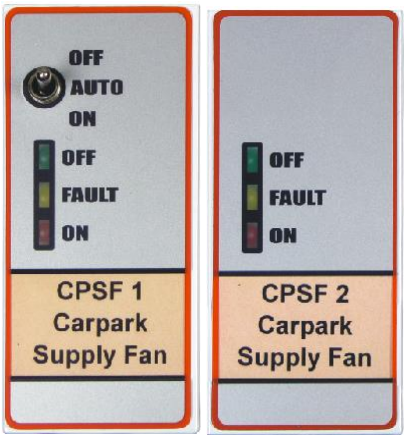

(Slave unit)

Functions

2.2.1 Fan Over-Ride

An over-ride switch is available to force the fan OFF or ON.

OFF AUTO ON

2.2.2 Fan Status

The status of the fan is received from the Fan Relay Unit and displayed by LED indicators.

OFF FAULT ON

2.2.3 EXHAUST Jumper (MJ1)

The jumper provides control of clean air in the event of a fire—whether with air-conditioning fans, smoke-exhaust fans, or stairwell-pressurisation fans. In the event of a fire, the FCU performs in the following manner:

- With Jumper MJ1 inserted, Exhaust mode is selected. The fan controller activates and instructs the Fan Relay Unit to activate the Fan Start relay.
- With Jumper MJ1 absent, Clean-Air mode is selected. The fan controller instructs the Fan Relay Unit to activate the Fan Stop relay.

© Pertronic Industries Ltd

2.2.4 LATCH Jumper (MJ2)

The jumper selects Latching or Non-Latching operation. In the event of a fire, the FCU performs in the following manner:

- With Jumper MJ2 inserted, Latch mode is selected. If the Fan Controller was activated it continues to command the Fan Relay Unit to operate its associated relay after the activating condition is cleared from the panel. The Fan Relay Unit can only be reset through an Isolate/Reset Unit.
- With Jumper MJ2 absent, Non-Latching mode is selected. The Fan Controller will de-activate the associated relay when the 'Alarm' condition clears.

2.2.5 Interlock Terminator (MJ3)

MJ 3 must be fitted only in the Fan Control Switch Unit furthest away from the Fan Isolate/Reset Unit. In installations with multiple Fan Control modules requiring door interlock, insert MJ3 in the furthest-away unit, and omit it from all others. The closest unit connects to the Reset Isolate module, which provides a door interlock signal back to the panel.

2.3 Fan Relay Unit

The Fan Relay Unit is located adjacent to the building services fan control interface. Each Fan Relay Unit has an associated Fan Control Unit, which instructs the Relay Unit to turn a clean-air or smoke exhaust/pressurisation fan ON or OFF. Separate ON and OFF relays are provided on the Fan Relay Unit for this purpose.

The Fan Relay Unit also monitors the status of the fan ('Fan ON', 'Fan OFF' or 'Fan Fault'), and sends this information to the Fan Control Unit.

The Fan Relay Unit is an analogue loop operated device, and has address selection switches for selecting addresses 2 through to 99.

2.4 Fan Isolate/Reset Unit

The Fan Isolate/Reset Unit is optional (but it is mandatory for Door Interlock signalling to the panel and where latching fans are used). One or more may be used in a system, with each one connected and associated with a group of Fan Controllers. Note: Fan Isolate/Reset units are directly connected to Fan Control Switch units, which must all be on the same loop.

Functions

2.4.1 Isolate

The Isolate switch isolates mapped detector activations from the associated group of fans. If the Fan Control Unit is in 'Alarm' state, the Isolate function will restore the Control Unit to the 'Normal' operational state. When a Fan Control Unit is isolated, the OFF/AUTO/ON switch is still functional.

2.4.2 Reset

The Reset push-button resets latched 'Alarms' on connected Fan Control Units.

2.4.3 Lamp Test

The Lamp Test function (via the Reset pushbutton) forces the connected Control Units to perform a Lamp Test. The three front panel LEDs of each Control Unit cycle for 20 seconds and then return to 'Normal'. Press Reset to terminate the Lamp Test.

2.4.4 Door Interlock Monitoring

The Door Interlock output connection (K4) of the Fan Reset/Isolate unit is connected to the Door Interlock input of the fire panel. When the Reset switch is on, or when any of the Fan Controller mode switches are off-normal (not in the AUTO position), the fire panel will alert the operator if the cabinet door is closed.

© Pertronic Industries Ltd

2.5 Fan Reset Unit (alternative)

The F120 Fan Reset Unit can be used as an alternative unit to provide reset functionality. It uses one address on the analogue loop and can be used to reset fan control modules on the same loop. This module however does not provide an Isolate option.

Fit the MJ2 jumper only to use this module.

2.5.1 Mapping

Map the “alarm” conditions that are also mapped to the fan controller(s) to the Fan Reset Unit address.

2.5.2 Wiring

Connect the Reset terminal to the Reset Inputs on all Fan Control units (on the same loop) that require this function.

2.5.3 Operation

The Green Normal indicator remains on as long as none of the mapped “alarm” conditions are active. Once an “alarm” condition occurs the Fire Mode indicator will turn on.

Note: The associated Fan controllers can only be reset after all “alarm" events have been reset at the panel. Operating the Reset push-button at any other time will have no effect.

2.6 Fan Control Switch

The Fan Control Switch is an optional key-switch module used to Isolate/Enable the OFF/AUTO/ON switch on the Fan Control Unit. It does not control the operation of fans, but over-rides the switch input(s) to prevent tampering with the Fan Control Unit. The Fan Control Switch is a double-pole, Type ‘C’ (NO-C-NC) Bulgin 6083/C key-operated switch— the key cannot be removed when in the ‘Switch Enable’ position.

Note: Since this is a ‘special’ option, please specify this device at time of ordering the associated Fan Isolate/Reset Module for factory pre-configuration of both units.

Functions:

Operation of the switch depends upon whether the fan(s) operate in ‘clean air’ mode or in ‘exhaust air/pressurisation’ mode. See table below.

	AUTO (The fan follows Fan Controller instructions)	**SWITCH ENABLE** (The Fan Controller instructions are over-ridden)
Clean Air	The fan usually runs. **Connections:** • Common: 0V (K1/5) • N/C: not connected • N/O: S1 (K1/4)	Fan Controller switch input (S1) is forced to 0V, ensuring the fan continues to run whatever the Fan Controller instructs.
Exhaust Air	The fan is usually OFF. **Connections:** • Common: +5V (K1/3) • N/C: not connected ; • N/O: S1 (K1/4)	Fan Controller switch input (S1) is forced to +5V, ensuring the fan cannot turn ON, whatever the Fan Controller instructs.

Table 2-1: Fan Control Switch Operation

© Pertronic Industries Ltd

2.7 Building Services Interface

The Fan Relay Unit is designed to connect to standard building service fan control interfaces. Two clean relay contacts are provided: Normally-Open for 'Fan Run,' and Normally-Closed for 'Fan Stop' control. A monitored input determines the status of the fan (Run, Stop or Fault).

A typical interface connection is shown below:

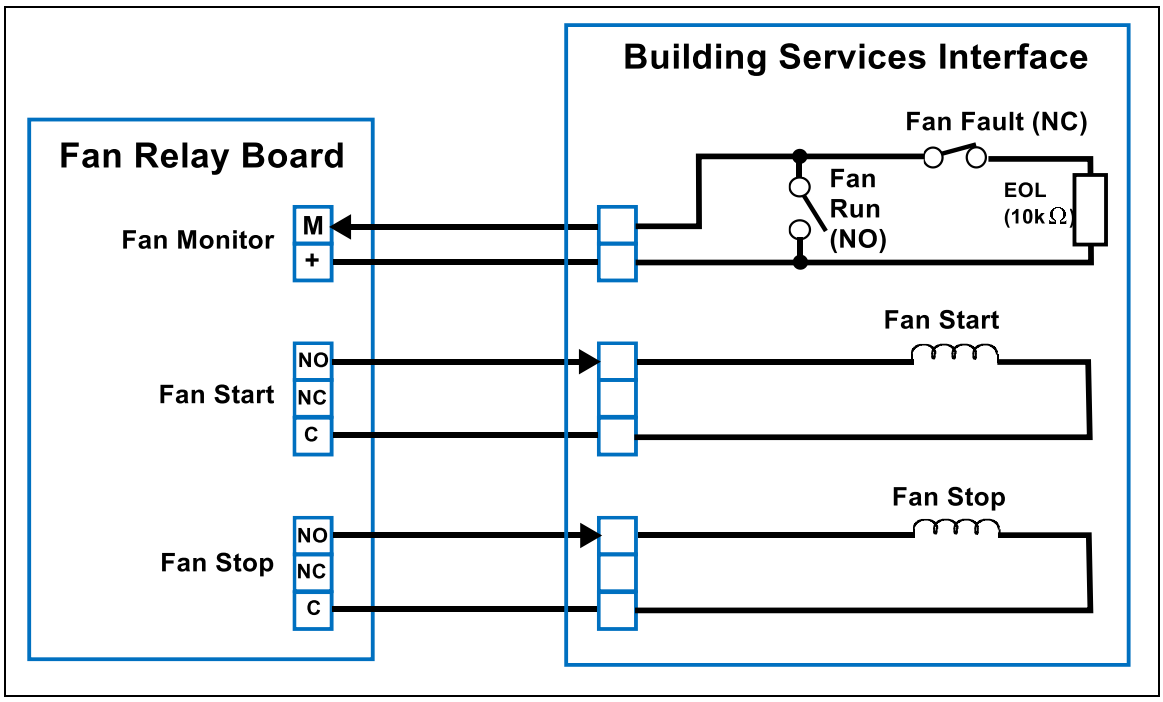

Figure 2-1: Building Services Interface

© Pertronic Industries Ltd

3. INSTALLATION and OPERATION

3.1 Addressing and Mapping

Each building services fan that is to be controlled by the Fan Controller must have:

- a Fan Control Unit at the fire panel, plus
- a Fan Relay Unit at the Building Services Interface to control and monitor the fan.

Associated with each fan are smoke detectors placed at strategic positions within the air-flow paths to detect smoke. The Fan Control Unit and the Fan Relay Unit are both addressable devices, and they must be installed on the same addressable loop from the fire panel. Other Fan Controller pairs may be installed on other addressable loops. The detectors may be installed on any loop.

The Fan Control Unit and Fan Relay Unit must have sequential addresses, the Fan Control Unit having the lower address.

The smoke detectors associated with a particular Fan Controller pair—to start the associated fan—are mapped to the appropriate Fan Control Unit by the Pertronic panel. See diagram below:

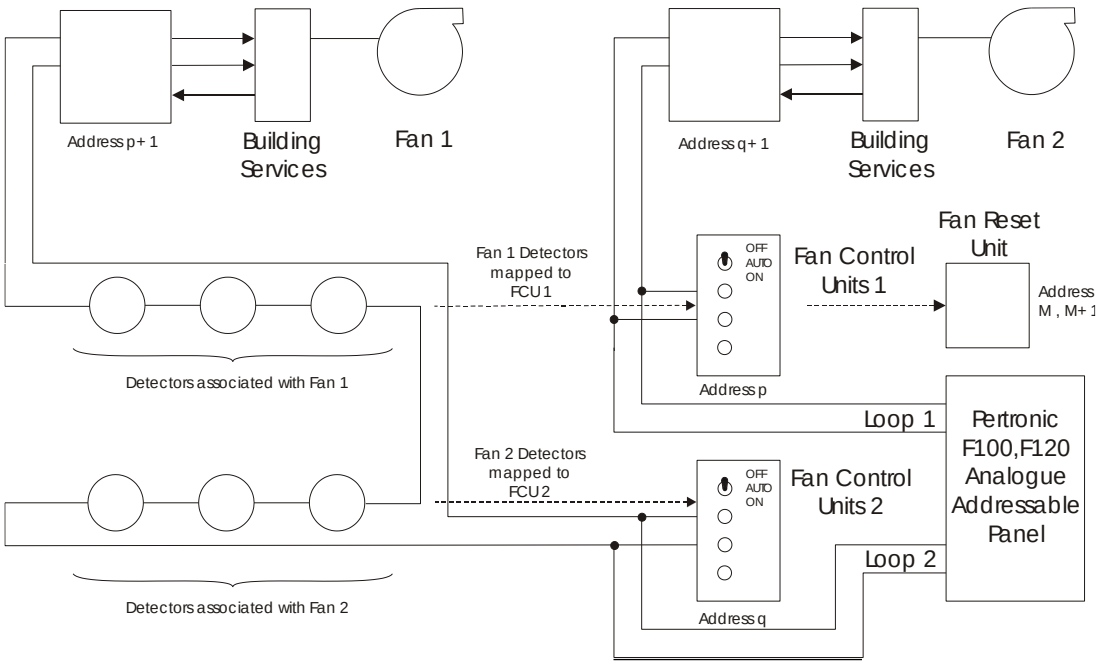

Figure 3-1: A Fan Control System example

3.2 Air Vent and Duct Smoke Detectors

Smoke detectors are connected to the addressable loop, installed at appropriate locations for smoke detection in key air paths; their proper location on the loop is critical to provide information for the control of the clean air or smoke exhaust or pressurisation fans. The detectors need not be on the same addressable loop as the Fan Control Unit and Fan Relay Unit. (However, each Fan Control / Fan Relay Unit pair must be on the same addressable loop).

These detectors must be mapped to the associated Fan Relay Unit at the panel to stop the fan. If the duct detector(s) activate the stop relay, the FCU's green OFF LED flashes (500 ms ON and OFF). It goes OFF (returns to normal) 65 seconds after the detector resets to normal.

© Pertronic Industries Ltd

3.3 Clean Air / Smoke Exhaust-Pressurisation Selection

Each Fan Controller pair may be selected to control a fan for ‘clean air’ or for ‘smoke exhaust and pressurisation’ purposes. The selection is made with the EXHAUST jumper (MJ1) on the Fan Control Unit.

Insert Exhaust jumper (MJ1)	for exhaust or pressurisation operation.
Remove Exhaust jumper (MJ1)	for clean-air operation

With ‘clean-air’ operation selected, while in AUTO mode, the Fan Control Unit turns the fan OFF when smoke is detected—the STOP relay is activated. The fan turns ON again (Stop relay de-activated) only after a delay of 65 seconds from the time the activating detector or detectors are reset (if latched), or from the time smoke has been cleared from the detector’s chambers (if the detector or detectors are non-latching).

The red led on the Fan Relay is turned ON when the Start relay is activated. The red led flashes (500ms on / 500ms off) when the Stop relay is activated.

3.4 Mode Switch Group Operation

A group of Fan Controller pairs may have a common mode switch. Only one of the Fan Control Units in the group has the switch, but the RUN, AUTO and STOP functions apply to all Control Units of the group. Each Slave Fan Control Unit retains its individual LED indication for the state of the associated fan.

3.5 Latching Mode

Some systems require fan smoke detector alarms to latch, and to be subsequently reset, by means of a ‘Master Reset’ switch—one that is independent of the normal operation of the fire panel. Latching Mode is selected by insertion of the Latch link (MJ2) at the rear of the Fan Control Unit.

When Latching Mode is selected, detector alarms mapped to the Fan Control Unit become latched by the Fan Control Unit itself, regardless of the panel state.

The indicating LED on the front of the Fan Control Unit flashes to show the state of the Fan Relay Unit when a Control Unit has a latched alarm. For Controllers configured as ‘Clean Air’, Fan OFF will not be activated until the required 65-second timeout period has elapsed.

If an optional Isolate/Reset Unit is connected, pressing the Reset button on the Isolate/Reset Unit will reset an associated single or group of Fan Controllers. If a detector mapped to the Control Unit is still in ‘Alarm’, the latched state will not reset.

3.6 Fan Controller Isolation

When a group of Fan Controllers are connected to a Fan Isolate/Reset Unit, they are isolated from active mapped detectors if the Normal / Isolate switch is in the Isolate position.

When the Fan Controller is isolated any latched states are reset.

Use of the OFF/AUTO/ON switch will continue to carry out the ‘Fan ON’ or ‘Fan OFF’ operation selected.

© Pertronic Industries Ltd

4. FAN CONTROLLER OPERATION

When the FAN STOP relay is energised, the FAN START relay is always de-energised.

When the FAN START relay is energised, the FAN STOP relay is always de-energised

EXHAUST link	Idle Fan State	Action	Effect
IN	Fan usually OFF	Detector activation Duct activation	Energises the Fan Relay Unit FAN START relay. Energises the Fan Relay Unit FAN STOP relay.
OUT	Fan usually RUNNING	Detector activation Duct activation	Energises the Fan Relay Unit FAN STOP relay. Energises the Fan Relay Unit FAN STOP relay.

Table 4-1: Exhaust link function and action of the Fan Relay

LATCH link	Action	Effect
IN	Detector activation Duct activation	Operates the Fan Relay according to the state of the EXHAUST link. The Fan Relay state remains when the detector becomes inactive. Always energises the Fan Interface FAN STOP relay.
OUT	Detector de-activated	No Duct Detector activation). The Fan Control system reverts to the (Idle Fan state, as determined by the EXHAUST link.

Table 4-2: Latch link

FAULT LED	Cause of Fault
Operates (steady ON) when:	• Monitoring to the Building Services equipment by the Fan Interface is off-normal, or • The fan does not respond appropriately to the Fan Interface FAN START or FAN STOP commands within 45 seconds.

Table 4-3: Fault LED Indication

DOOR link	Action	Effect
IN	Interlock terminator	For multiple door interlock (only) the most remote unit requires the terminator fitted. If fitted in a unit other than the most remote, no door interlock signal will be reported from further units
OUT	Interlock feed-through	Units feeds through local interlock states If link accidently omitted, door interlock state may be incorrect

Table 4-4: Door Interlock link

© Pertronic Industries Ltd

5. DIAGRAMS

5.1 Fan Controller System Connections

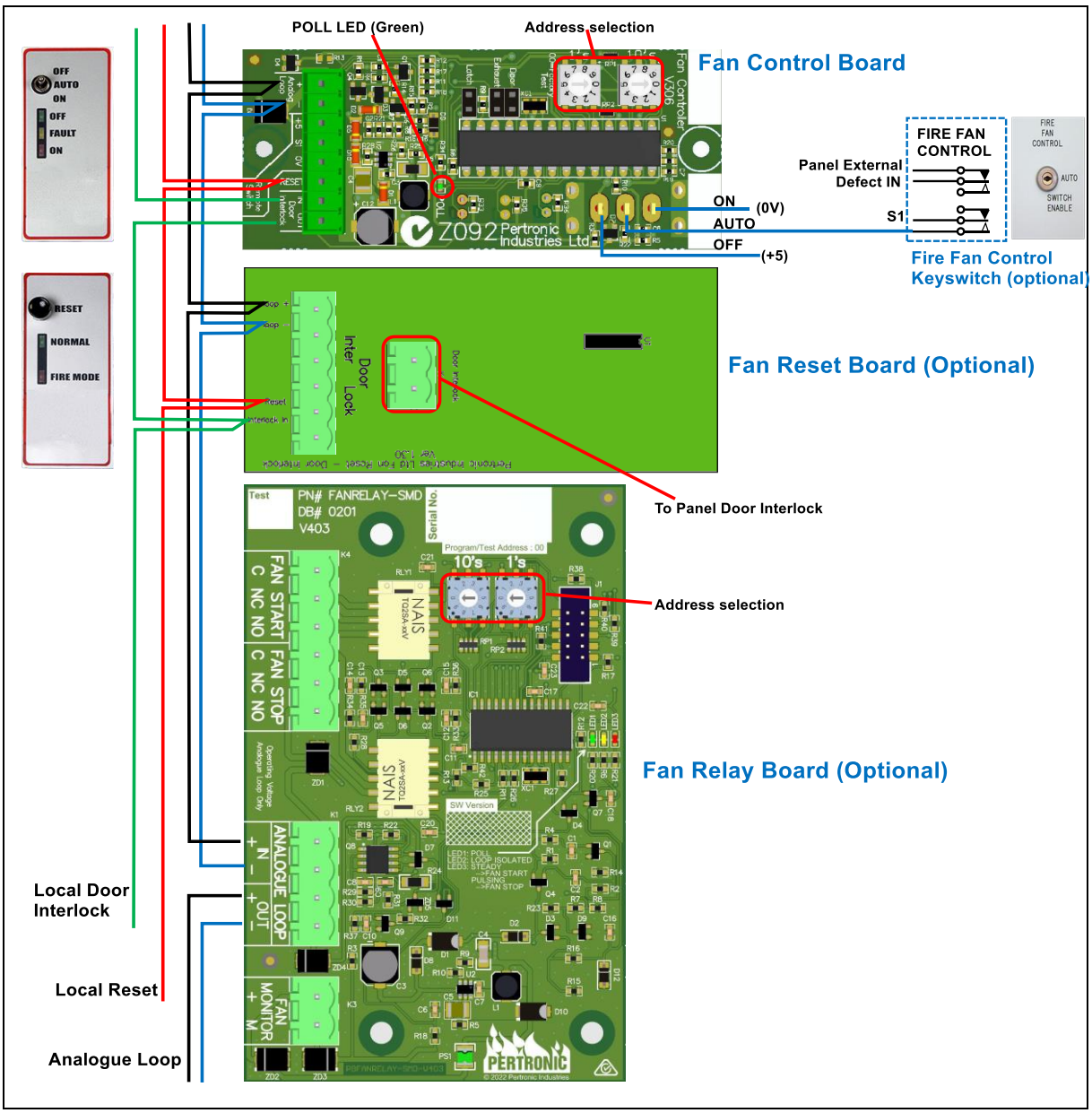

Figure 5-1: Fan Control Unit System Interconnection

© Pertronic Industries Ltd

5.2 Typical Fan Relay Unit Connection

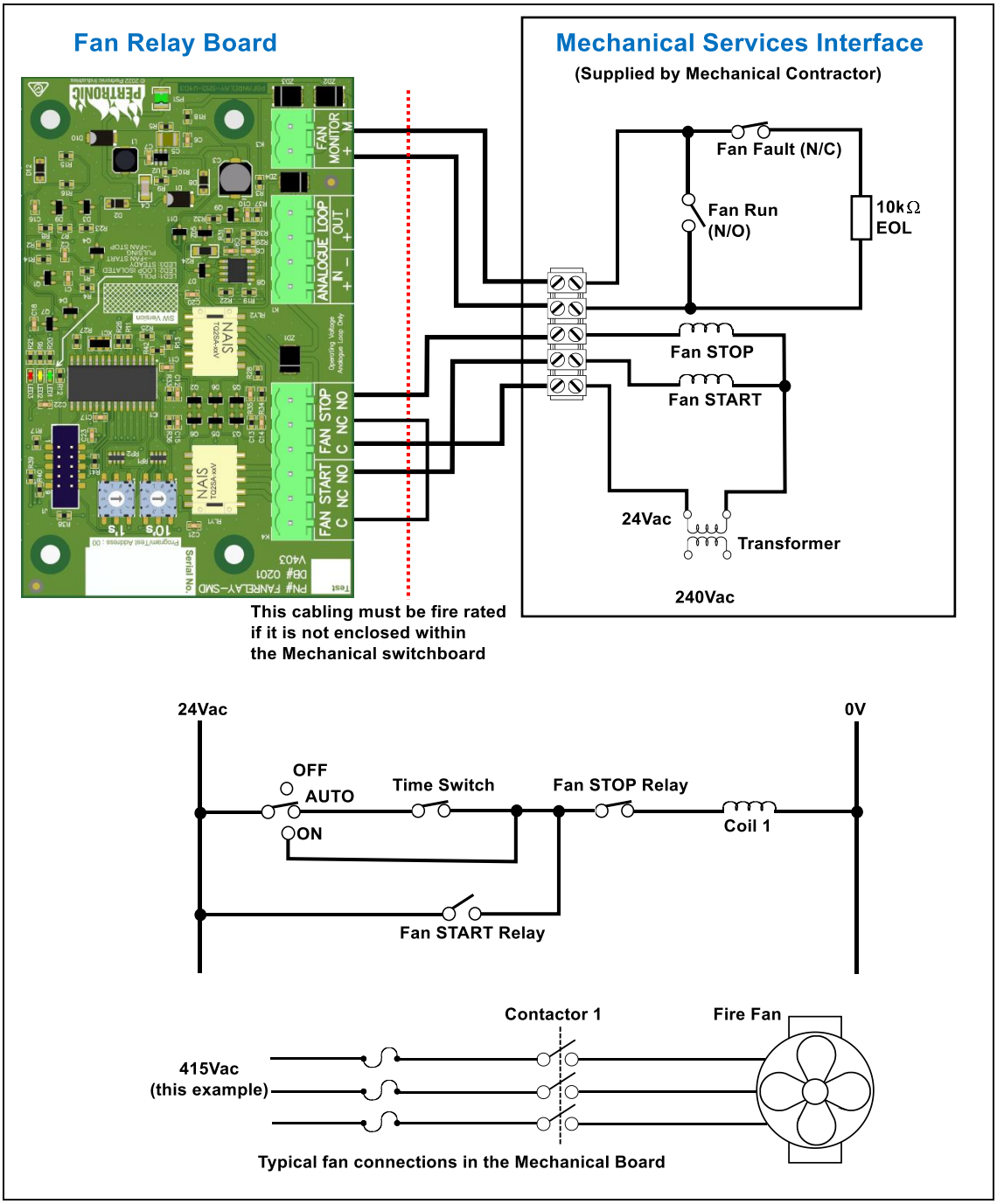

Figure 5-2: Fan Relay Unit connections

© Pertronic Industries Ltd

5.3 Optional Fan Relay Unit Connection

(Mechanical Board with Time Switch)

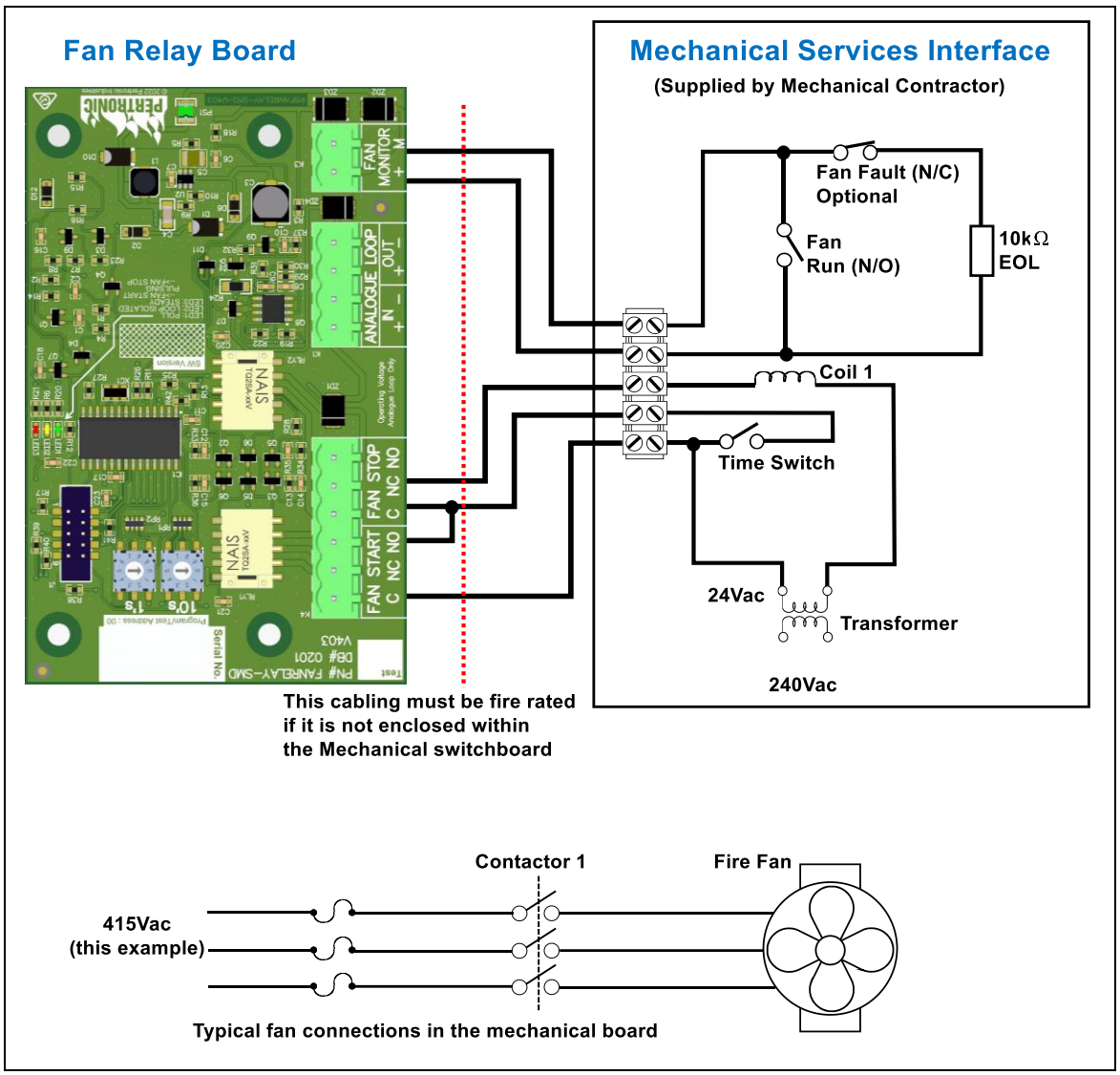

Figure 5-3: Fan Relay Unit connection with mechanical board

© Pertronic Industries Ltd

Document Change History

Issue Number	Reason for Update	Description of Changes	Author
Issue 8: Mar 2006	CN514: Duct Detector Operation:	Section 4: New Section 5: Major Update Sections: 1, 2 & 3: Minor Updates	BruceMcN Geoff T BruceMcN
Issue 8.2	Door Interlock function correction CN 1193, CN1185	Figure 1.1 correction Subsection 2.2.5 new Table 4.4 new New Version hardware – Firmware compatibility	PeterF
Issue 8.3 Sep 2010	Clarifications and minor layout corrections.	2.4 Iso/Reset units are not addressable. 3.2 Duct detector mapping. 2.2 & 2.4 Updated user interface images.	AvV HalB
Issue 8.4	Compliance with AS/NZS 1668	Note under Figure 1.1	DW
Issue 8.5 Sep 2013	Alternative Reset Unit, CN1648	Added section 2.5	RDB
Issue 8.6 Oct 2014	CN1847 LED flashing for STOP relay active	3.2 correction to LED colour for duct detector active. 3.3 Added STOP relay active	RDB.
Issue 8.7 June 2020	CN2772 Incorrect identification of BSIU	Figure 2-1 correction	RJK
Issue 8.8 Sept 2020	CN2809 Update	Change address details, remove FAX numbers, correct Figure 2-1	RJK
Issue 9.0 Dec 2021	CN3105	Reformat, Updated Figures 2.1, 5.1, 5.2,.5.3, EOL resistor	RJK
Issue 9.1 Feb 2022	CN3124	Updated EOL Resistor in Figs 2.1, 5.2, 5.3	RJK
Issue .2 May 2022	CN3187	Updated Fig 5.1, 5.2, 5.3 to incorporate v403 Fan Relay PCB	RJK

© Pertronic Industries Ltd

PERTRONIC SALES AND TECHNICAL SUPPORT

New Zealand
Pertronic Industries Limited

Head Office

17 Eastern Hutt Road
Wingate
Lower Hutt
Phone +64 4 567 3229

sales@pertronic.co.nz
tech@pertronic.co.nz

Auckland

3 Gloucester Park Road
Onehunga
Auckland 1061
Phone +64 9 633 0226

auckland@pertronic.co.nz

New Zealand Website
www.pertronic.co.nz

Australia
Pertronic Industries Pty Limited

Melbourne

Unit B2
2A Westall Rd
Springvale
VIC 3171
Phone +61 3 9562 7577

sales.vic@pertronic.com.au

Sydney

Unit 9
38-46 South Street
Rydalmere
NSW 2116
Phone +61 2 9638 7655

sales.nsw@pertronic.com.au

Brisbane

Unit 3
43-49 Sandgate Rd
Albion
QLD 4010
Phone +61 7 3255 2222

sales.qld@pertronic.com.au

Adelaide

65 Manton Street
Hindmarsh
SA 5007
Phone +61 8 8340 9533

sales.sa@pertronic.com.au

Perth

Unit 6/1 Burchell Way
Kewdale
WA 6105
Phone +61 8 6555 3008

sales.wa@pertronic.com.au

Australian website
www.pertronic.com.au

© Pertronic Industries Ltd