• **Melbourne**

Unit B2
2A Westall Rd
Springvale
VIC 3171
Tel (03) 9562 7577
Fax (03) 9562 8044
sales.vic@pertronic.com.au

• **Sydney**

Unit 19
287 Victoria Rd
Rydalmere
NSW 2116
Tel (02) 9638 7655
Fax (02) 9638 7688
sales.nsw@pertronic.com.au

• **Brisbane**

Unit 3
43 Sandgate Rd
Albion
QLD 4010
Tel (07) 3255 2222
Fax (07) 3054 1458
sales.qld@pertronic.com.au

• **Adelaide**

65 Manton St
Hindmarsh
SA 5007
Tel (08) 8340 9533
Fax (08) 8340 9544
sales.sa@pertronic.com.au

• **Perth**

3/71 Beringarra Ave
Malaga
WA 6090
Tel (08) 6555 3008
Fax (08) 9248 3783

www.pertronic.com.au

PERTRONIC
LOOP RELAY
TECHNICAL MANUAL
AUSTRALIA

Valid For Loop Relay:
PCB Hardware: v2.0 and greater
PCB Firmware: v2.nn and greater

Issue 4

The contents of this manual are copyright.

This document is to be used only for operating *Pertronic* Fire Alarm systems.

This document is not to be reproduced, photocopied or passed in part or whole to a third party without the express, written authorization of Pertronic Industries Ltd

Acronyms:

BA	Base Address	First address of a multi-address module as set by the decade switches
EOL	End of Line	End-of-line termination, nominally 10kΩ Resistor, used to monitor the presence and integrity of each monitored relay output.
OC	Open Circuit	
SC	Short Circuit	

Glossary:

'Loop Power'	The Loop Relay responder is configured to be powered from the analogue loop.
'External Power'	The Loop Relay responder is configured to be powered from an external power supply. This may be the panel power supply or an independent isolated power supply.
F100A	Pertronic F100A series Fire Alarm Panel
F120A	Pertronic F120A series Fire Alarm Panel

CONTENTS

1.	INTRODUCTION		1
	1.1	Loop Relay Block Diagram	1
	1.2	Functional Description	2
	1.3	Specification	2
	1.4	Pulsing Relays	3
2.	LOOP RELAY INSTALLATION		4
	2.1	Loop Connection	4
	2.2	Loop Power Connection	5
	2.3	External Power Connection	5
	2.4	Relay Load and Power Supply Considerations	5

FIGURES

Figure 1.1 Loop Relay PCB Layout 1

Figure 2.1 Analogue Loop Connection 4

Figure 2.2 Monitored Loads 5

Figure 2.3 Relay Powered from the Analogue Loop 5

Figure 2.4 Relay Powered Externally from the Fire Panel Power Supply 6

Figure 2.5 Relay Powered Externally from an Independent Isolated PSU 6

1. INTRODUCTION

1.1 Loop Relay Block Diagram

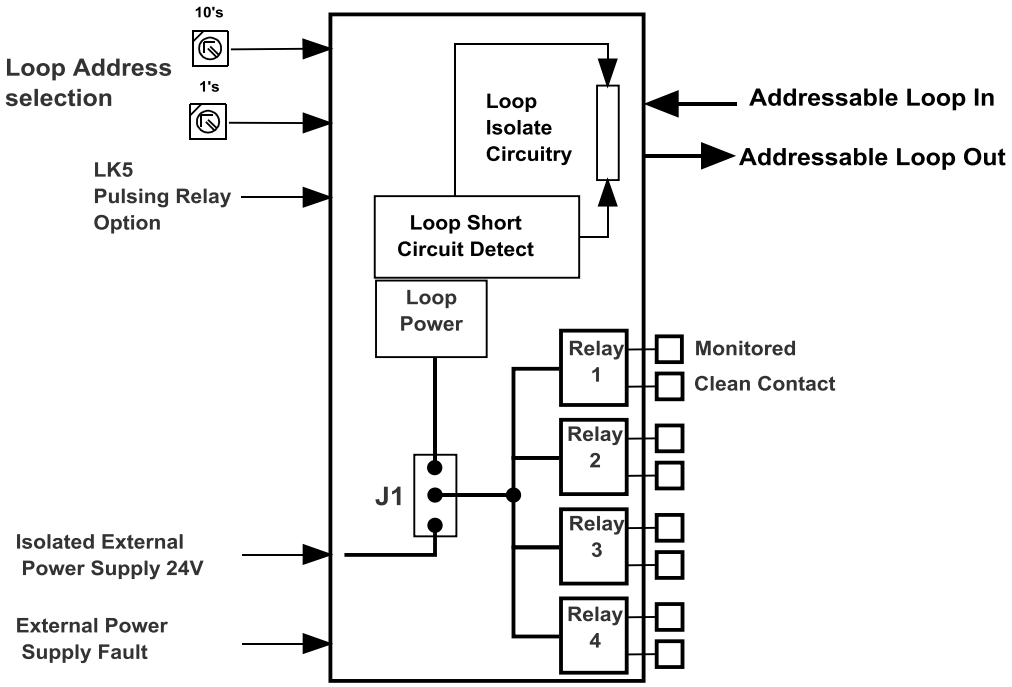

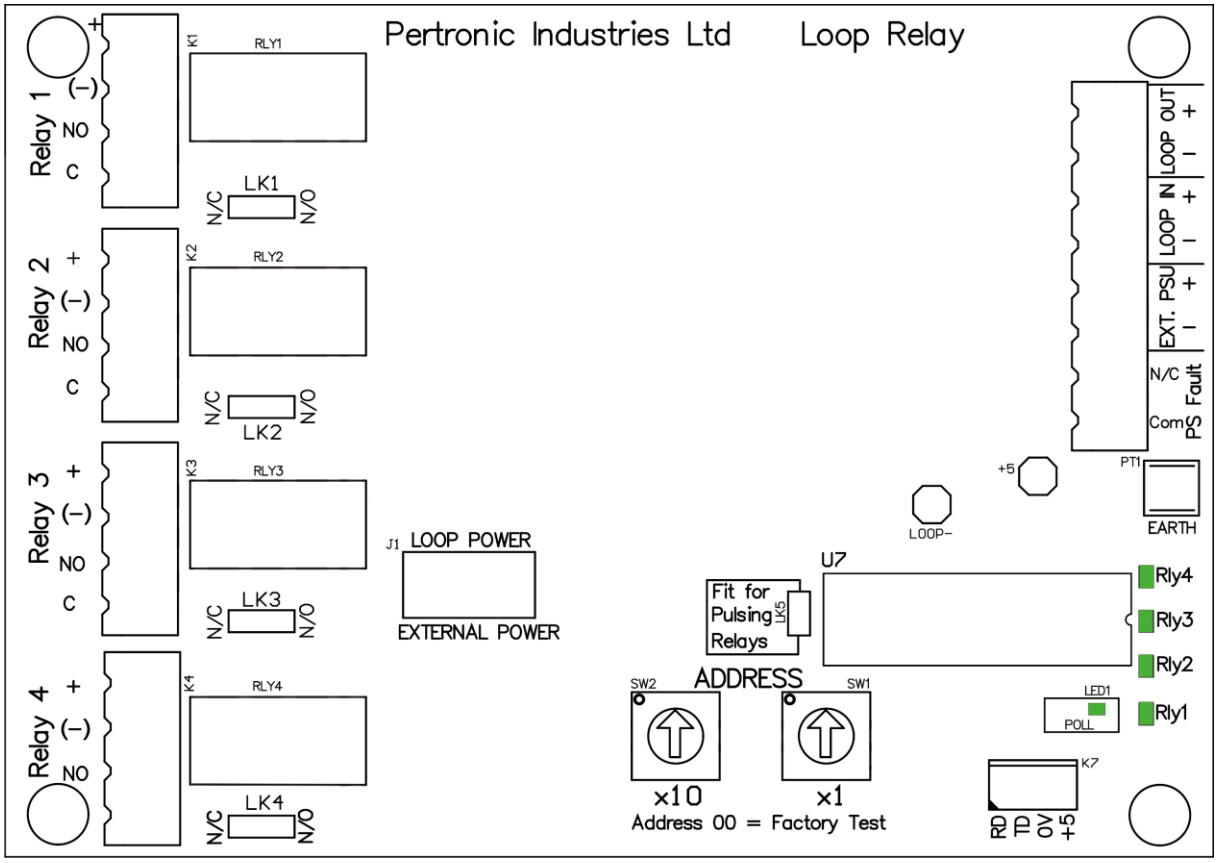

Figure 1.1 Loop Relay PCB Layout

1.2 Functional Description

The ***Pertronic Loop Relay*** responder extends the ***F100A*** and ***F120A*** analogue addressable automatic fire alarm systems by allowing relays to be controlled and operated from an analogue loop.

The ***Loop Relay*** responder controls 4 relays that may be individually selected as monitored or non-monitored. The power source for the relay contacts may be supplied either from the analogue addressable loop (with current limitations) or from an external power supply. Up to 96 relays (24 x ***Loop Relay*** boards) can be connected to each analogue addressable loop.

1.3 Specification

Loop Relay PCB Dimensions: 96 x 136 H x W mm

Optional Cabinet Dimensions: 254 x 310 x 70 H x W x D mm
Weight: 2.2kg
Material: 1.2mm mild steel, powder coated off-white—other colours are optional.

Relay Outputs There are four relays with the following types of contacts:

- Each has a clean, non-monitored, NO or NC contact rated at 2A, 24Vdc; Links **LK1** to **LK4** select whether the contacts are NO or NC.
- Each relay also has a single NO monitored contact.

Pulsing Relays Link **LK5**, determines whether the relays on the board pulse or remain on constantly. Address spaces, based on the selected base address of the ***Loop Relay,*** activate a relay and determine whether the relay pulses or remains steady.

DC Current 24Vdc, 6mA quiescent loop current.

Loop Powered or Externally Powered

The power source for the relays may be supplied from the analogue loop or from an isolated external power supply. This option is selected by link **J1,** and it applies to ALL the relays on the board.
Current maximums include the following:

- The presence of the external supply is monitored, and it must lie within the range 5Vdc to 30Vdc.
- For loop-powered boards, the maximum load current per relay is 100mA.
- For externally powered boards, the maximum load current per relay is 1A.
- The maximum loop current available from the panel, to supply relays and other loop-powered devices, is 350mA per loop.

Addressing Each ***Loop Relay*** uses either 4 or 8 address spaces, as required:

- Four (4) address spaces are used if the relays are non-pulsing.
- Eight (8) address spaces are used if the relays are pulsed.

The address switches select the base or start address for the Loop Relay, and correspond to the address for Relay 1.

PS Fault Input An input is provided for external (Power Supply) fault detection.
This input is normally closed, via a clean relay or switch contact, and it opens for a fault condition. If the input becomes open-circuit, the Loop Relay board reports a Power Supply defect on the base address (BA).

Configuration The relays may be configured as any of the available types used in the ***F100A*** or ***F120A*** (Auxiliary, Door Holder, etc).

1.4 Pulsing Relays

When LK5 is fitted, the relays can be configured as either steady (non-pulsing) or pulsed:

Pulsed relays are addressed as:	BA	BA+2	BA+4	BA+6
Steady relays are addressed as:	BA+1	BA+3	BA+5	BA+7

BA = Base Address

Each relay board with **LK5** fitted occupies 8 consecutive addresses on the loop.

When LK5 is not fitted, the relays are always steady (non-pulsing).

Each relay board with **LK5** not fitted occupies 4 consecutive addresses on the loop.

The standard pulse rate (software versions 2.nn) is:

ON time 3.5 seconds
OFF time 12.5 seconds.

Special software (version 9.nn) is available with pulse rate:

ON time 3 seconds
OFF time 3 seconds

Monitoring is disabled while a relay is activated—this applies whether the relay is pulsed or not pulsed.

2. LOOP RELAY INSTALLATION

2.1 Loop Connection

The ***Loop Relay*** connects to the standard ***F100A*** and ***F120A*** analogue loop (refer to Figure 2.1). It uses 'call point' or module address space on the ***F100A*** and ***F120A*** loop.

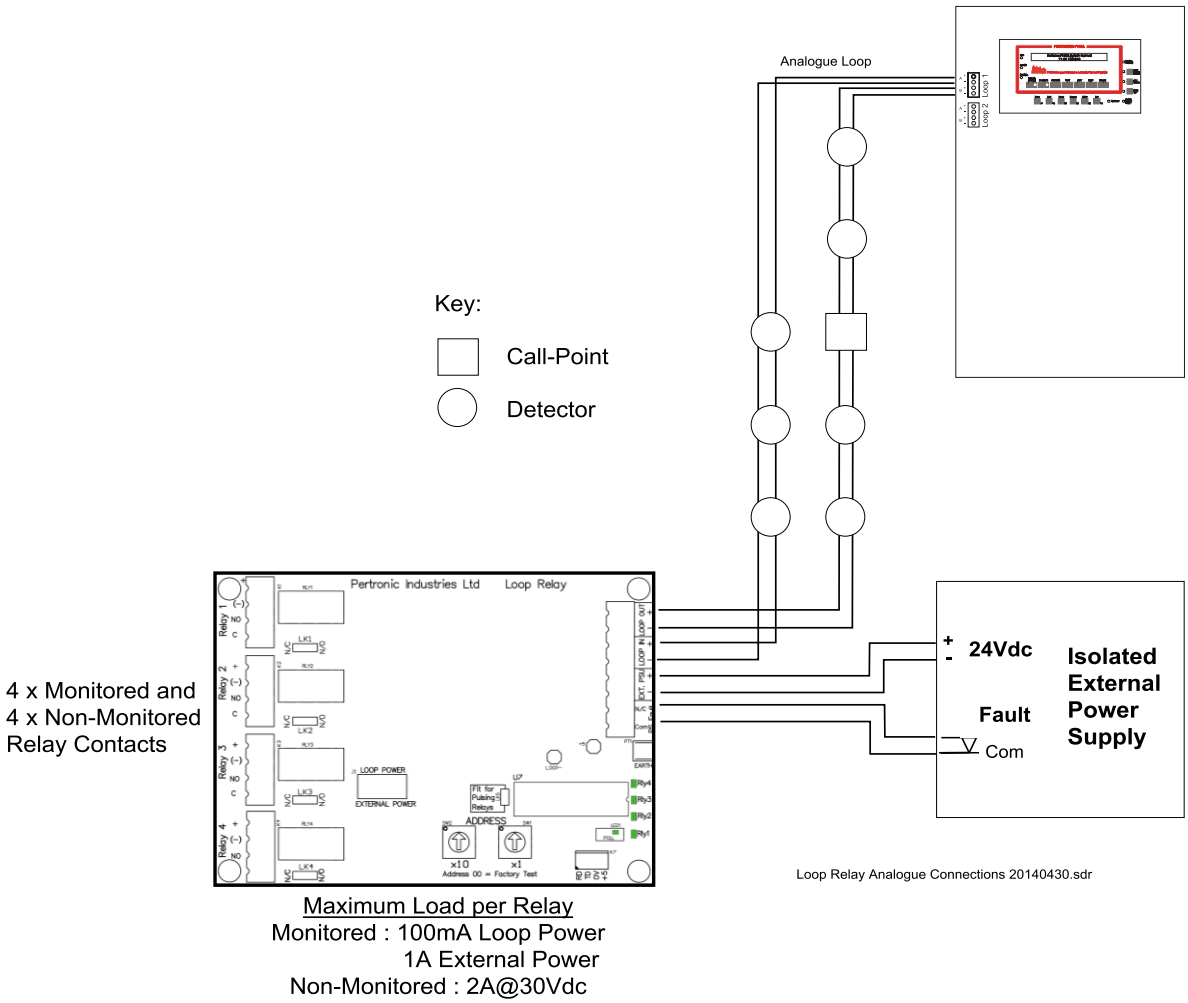

Figure 2.1 Analogue Loop Connection

The ***Loop Relay*** uses 4 or 8 address spaces. The first, or base address, is selected by the address switches **SW1** and **SW2** on the PCB.

If 'Pulsing Relays' is not selected, 4 addresses are used, and are allocated as shown:

- 1st address (base address + 0) Relay 1, non-pulsing
- 2nd address (base address + 1) Relay 2, non-pulsing
- 3rd address (base address + 2) Relay 3, non-pulsing
- 4th address (base address + 3) Relay 4, non-pulsing

If 'Pulsing Relays' is selected (**LK5** 'Fit for Pulsing Relays' on the PCB is inserted—refer to Figure 1.1), 8 addresses are used. The allocation of addresses is as shown:

- 1st address (base address + 0) Relay 1, pulsing
- 2nd address (base address + 1) Relay 1, non-pulsing
- 3rd address (base address + 2) Relay 2, pulsing
- 4th address (base address + 3) Relay 2, non-pulsing

- 5th address (base address + 4) Relay 3, pulsing
- 6th address (base address + 5) Relay 3, non-pulsing
- 7th address (base address + 6) Relay 4, pulsing
- 8th address (base address + 7) Relay 4, non-pulsing

2.2 Loop Power Connection

To power the monitored relays from the loop, insert the 6-position link (**J1**) into the **LOOP POWER** position (refer to Figure 2.2). The maximum current allowed is 100mA per relay. There are no restrictions on the type of devices driven.

2.3 External Power Connection

To power the monitored relays from an external power source (5Vdc to 27Vdc), insert the 6-position link (**J1**) into the **EXTERNAL POWER** position (refer to Figures 2.3 and 2.4). The maximum current allowed is 1A per relay. There are no restrictions on the type of devices driven.

The external power is connected to connector **K1,** terminals 5 and 6. If power is lost at these terminals, a fault signal is sent to the Fire Alarm panel via the analogue addressable loop. A defect on the external power supply can be monitored through connector **K1**, terminals 7 and 8. This input is normally held closed, and it opens to indicate an external defect such as low battery on the external supply. If a fault condition is detected, a fault signal is sent to the Fire Alarm panel via the analogue addressable loop.

2.4 Relay Load and Power Supply Considerations

2.4.1 Loop Powered

Characteristics include the following:

- The maximum current available for each monitored relay is 100mA per relay.
- Any load type may be connected (resistive, relay coil, PA400 sounders, etc.).
- A back emf diode must be connected across any inductive load.
- If circuit monitoring is required, two suitably rated diodes must be connected as shown in Figure 2.2.

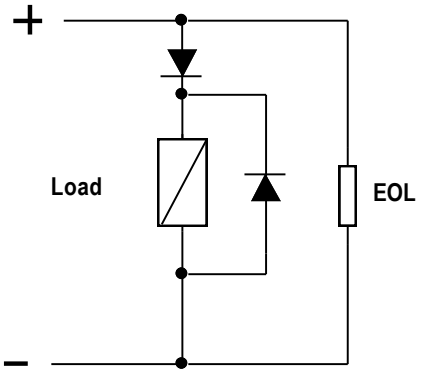

Figure 2.2 Monitored Loads

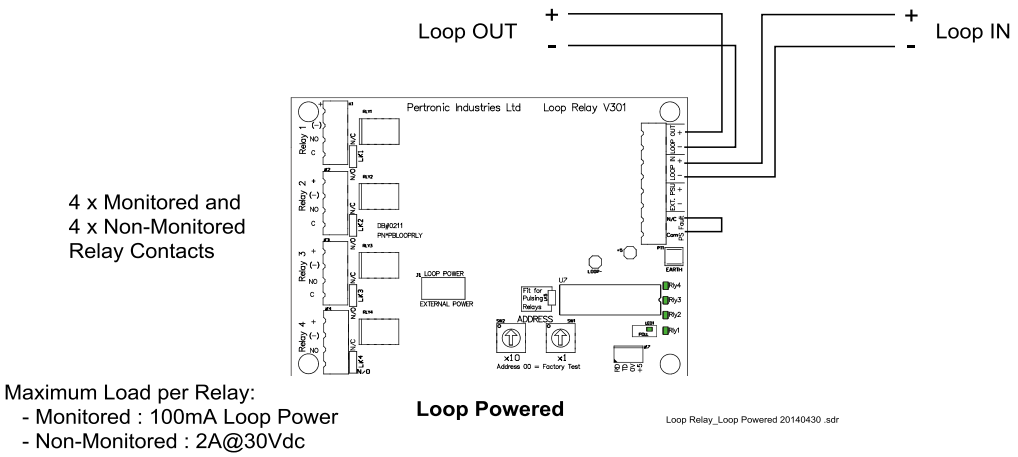

Figure 2.3 Relay Powered from the Analogue Loop

2.4.2 Externally Powered:

Characteristics include the following:

- The maximum current available for each monitored relay is 1A per relay.
- Any load type may be connected (resistive; relay coil; PA400 sounders; etc.).
- A back emf diode must be connected across any inductive load.
- If circuit monitoring is required, two suitably rated diodes must be connected as shown in Figure 2. 2, on page 5.

The **Loop Relay** responder may be powered from either of two (2) external sources:

1. **Fire Panel Power Supply**
   Loop Relay responders may be powered from the Fire Panel power supply—provided the boards are fitted inside the panel. Pertronic Industries strongly recommends an independent power supply be used when **Loop Relay**(s) are mounted outside the Fire Panel.

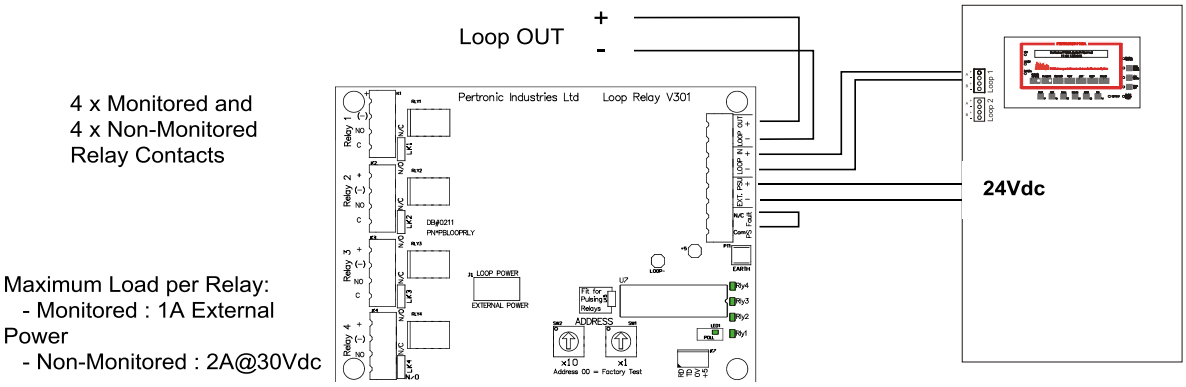

Pertronic Industries strongly recommends that Loop Relays be powered from the Fire Panel power supply ONLY if the Loop Relay is mounted within the Fire panel.

External Power Supply Sourced from Fire Alarm Panel Loop Relay Ext Power_Panel 20140430.sdr

Figure 2.4 Relay Powered Externally from the Fire Panel Power Supply

2. **Independent Isolated Power Supply**
   This offers the most secure and flexible option for powering **Loop Relay**(s). Consideration should be given to providing a fully monitored power supply with a 24-Hour test facility.

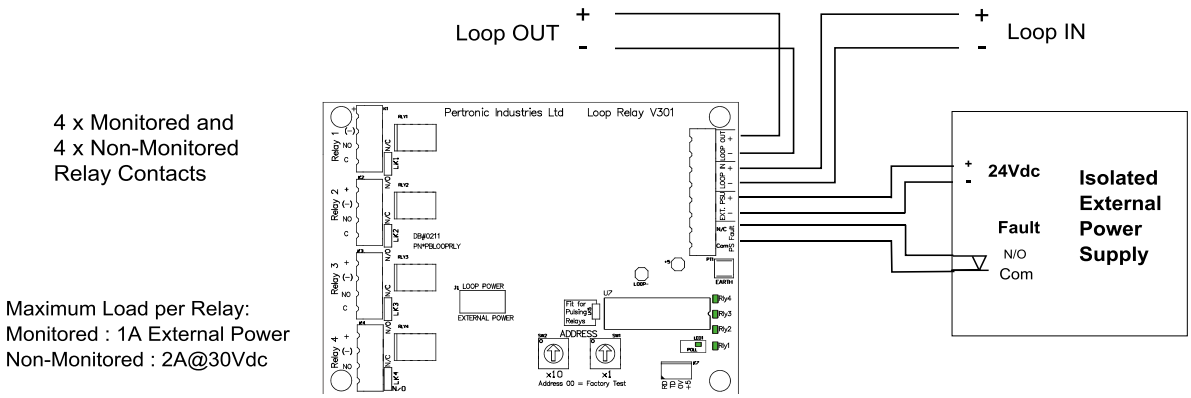

Isolated External Power Supply Loop Relay_Ext PSU 20140430 .sdr

Figure 2.5 Relay Powered Externally from an Independent Isolated PSU

Document Change History

Issue Number	Date	Reason for Update	Description of Changes	Author
Issue 1:				
Issue 2:	March 2001	First full release.		BMcN
Issue 3:	November 2005	Pulsed Relays Relay Load and Power Supply Considerations.	Inserted Section 1.4 Revised Section 2.4	AvV GMT
Issue 3.1	November 2006	Update Power Supply 'Defect' advice	Amended Section 1.3	GMT
Issue 4	May 2015	SMD version	Update to diagrams, PCB dimensions.	RDB