Global LCD Panel Exchange Center www.panelook.com 屏库:全球液晶屏交易中心

SAMSUNG
MOBILE DISPLAY

LEAD-FREE

Date : OCT. 27th, 2011

Specification for Approval

Product Name : AMOLED Module

Model Name : AMS326PM01

Description : 3.26" Visual WVGA(854×480) 16M Colors

Proposed by			Customer's Approval
Designed	Checked	Approved	
Jae Young Oh	Eun Jung Oh	Eui Soon Lee	

All information contained within this document is strictly private and belongs to the Samsung Mobile D isplay Co,. Ltd. It is to be treated as being marked "Proprietary and Confidential" and is intended only for the recipient(s) to whom it has been sent by us. It may also be legally privileged.
Also, contents in this document are subject to change after prior notice to the customer.

One step solution for LCD / PDP / OLED panel application: Datasheet, inventory and accessory! www.panelook.com

Global LCD Panel Exchange Center www.panelook.com 屏库:全球液晶屏交易中心

SAMSUNG MOBILE DISPLAY

Revision History

Date	Rev. No.	Contents	Remark
Jan.18th.'11	0.0	- Initial issue	-
Apr.25th.'11	0.1	- 24page Gamma updated - 40~48page updated	-
May.27th.'11	0.2	- 4page Page number updated - 6page Width updated - 25page YUVtoRGB updated - 39page Comment added - 40page Product drawing updated - 41page From LCD Modules to AMOLED Modules updated - 48page "confidential" deleted	-
Jun.14th.'11	0.3	- 10page component voltage updated - 34page pixel size error corrected - 34page maximum size of Polarizer dent and foreign material updated - 34page Tuffy, Polarizer, FPC inspection updated - 35page Note1) error corrected, Glass chipping Note2 deleted - 36page static push test added - 40page Product drawing updated	-
Jun.23th.'11		- 35page glass chipping specification updated - 40page Product drawing updated	-
Jul.05th.'11	0.4	- 18page Power off sequence updated - 22page Sleep-in/sleep-out sequence updated	-
Oct.27th.'11	0.5	- 18page 9-3-1. Power off sequence(Slee in mode) added - 19page 9-3-2. Power off sequence(Software reset) added - 23page 9-7-1. Sleep-in/Sleep-out sequence(Slee in mode) added - 24page 9-7-2. Sleep-in/Sleep-out sequence(Software reset) added	-

SAMSUNG Mobile Display CO., LTD.(All Rights Reserved).

One step solution for LCD / PDP / OLED panel application: Datasheet, inventory and accessory! www.panelook.com

Global LCD Panel Exchange Center www.panelook.com 屏库:全球液晶屏交易中心

Contents

1. Scope 5
2. Warranty 5
3. Features 6
4. Mechanical Specification 6
5. Maximum rating 6
6. Electrical characteristics 7
7. Electro-optical characteristics 8
8. Input/Output terminal 10
   8-1. I/O Connection 10
   8-2. Circuit Block Diagram (Module) 11
   8-3. Circuit Block Diagram (IC) 12
   8-4. Driver IC IO Pin Equivalent Circuit & Input Capacitance..... 13
9. Recommended Operating Sequence 14
   9-1. RGB Interface timing 14
   9-2. SPI Mode 17
   9-3. Power on/off sequence 18
   9-3-1. Power on/off sequence (Sleep in mode) 18
   9-3-2. Power on/off sequence (Software reset) 19
   9-3-3. Power on/off Timing 20
   9-4. Panel Condition Set 21
   9-5. Display Condition Set 21
   9-6. Pentile Gamma Condition Set 22
   9-7. Sleep-in / Sleep-out sequence 23
   9-7-1. Sleep-in / Sleep-out sequence (Sleep in mode) 23
   9-7-2. Sleep-in / Sleep-out sequence (Software reset)..... 24
   9-8. Dimming Mode/Normal Mode set sequence 25
   9-9. Gamma Condition Setting Value per Each brightness 26
   9-10 Driver IC register Map 27
   9-11. Panel Scan Direction Control 31
   9-12. Power Saver Mode(Sleep Mode Control) 33

SAMSUNG Mobile Display CO., LTD.(All Rights Reserved).

One step solution for LCD / PDP / OLED panel application: Datasheet, inventory and accessory! www.panelook.com

Global LCD Panel Exchange Center www.panelook.com 屏库:全球液晶屏交易中心

10. Quality level 34
10-1. Environment Condition 34
10-2. Sampling Procedures for each item's acceptance table..... 35
10-3. inspection item 36
11. Reliability 38
11-1. Test item 38
12. Handing Precautions 39
12-1. Mounting Method 39
12-2. Caution of AMOLED Handling and Cleaning 39
12-3. Caution Against Static Charge 39
12-4. Packing 40
12-5. Caution for Operation 40
12-6. Storage 40
12-7. Safety Precaution 41
12-8. Precautions before Use 41
13. Drawings 42
13-1. Product Drawing 42
13-2. Packing Drawing 43
13-2-1. Box Pack 43
13-2-2. Label 44
13-2-3. Packing for small Quantities..... 45
13-2-4. Over Pack 46
13-2-5. Packing for small Quantities..... 46
13-2-6. Over Pack Attach 46
13-2-7. Tray Drawing 47
13-2-8. Module Marking Rule 48
13-2-9. Pol' Rework Module Marking Rule..... 48
13-2-10. Carton Box Label 49
13-2-11. Refresh後 Module Marking Rule..... 49
14. Schematic Diagram 50

SAMSUNG Mobile Display CO., LTD.(All Rights Reserved).

One step solution for LCD / PDP / OLED panel application: Datasheet, inventory and accessory! www.panelook.com

Global LCD Panel Exchange Center www.panelook.com 屏库:全球液晶屏交易中心

1. Scope

This Specification defines general provisions as well as inspection standards for AM OLED module supplied by SAMSUNG Mobile Display Co., Ltd.,
If the event of unforeseen problems or unspecified items occurs, we naturally shall negotiate and agree to solution with customer.

2. Warranty

Basically, warranty term is 15 months of reliability characteristics of quality level after the outgoing date in SAMSUNG Mobile Display Co., Ltd., and SAMSUNG Mobile Display Co., Ltd., could compensate for defectives which happens within warranty term under condition that the products should be stored or be used as Specified under normal condition within the contents of Specification.
Otherwise, it is impossible to compensate for defectives when they happens by customer's mistake such as careless handing or circuit change, etc.
And after 15 months of warranty term, all replacements for defectives will be charged.

This Specification stipulates the final and comprehensive requirements for the respective products hereof. Beyond this Specification, it is responsibility of the customer to explicitly disclose any additional requirements, information or reservations regarding these requirements to Samsung Mobile Display prior to implementation, where any and all disclosures of the customer shall be with an authorized representative of Samsung Mobile Display in writing. Samsung Mobile Display shall not be responsible for safety, performance, functionality, compatibility of the system with which the SAMSUNG Mobile Display-supplied components are integrated unless such features have been expressly communicated and described in the Specification. SAMSUNG Mobile Display MAKES NO GUARANTY OR WARRANTY, EXPRESS OR IMPLIED , INCLUDING BUT NOT LIMITED TO MERCHANTABILITY OR FITNESS FOR A PARTICULAR PURPOSE, TO ANY PARTY.Moreover, any party should do their own due diligence regarding these requirements prior to implementation.

SAMSUNG Mobile Display CO., LTD.(All Rights Reserved).

One step solution for LCD / PDP / OLED panel application: Datasheet, inventory and accessory! www.panelook.com

Global LCD Panel Exchange Center www.panelook.com 屏库:全球液晶屏交易中心

3. Features

1) Display Color : 16M Color (RGB)
2) Display Format : 3.26" Visual WVGA 854(W)×480(H)
3) Interface : RGB 24bits, SPI-4/3 line
4) Driver IC : D53E6EA8805 By Magnachip
5) Polarizer : Hard Coating Glare Polarizer

4. Mechanical Specification

Item	Specifications	Unit
Dimensional outline	80.56(W) X 47.16(H) X 0.76(T)	mm
Number of dots	427(W) X R(B)GB(R)G X 480(H)	Dots
Active area	72.16(W) X 40.56(H)	mm
Diagonal Inch	3.26	inch
Dots size	0.0423(W) X 0.0845(H)	mm

5. Maximum Rating

Item		Symbol	Min.	Max.	Unit	Note
Supply voltage	Logic Power	VDD	-0.3	2.5	V	(1),(2)
		VCCIO1,2	-0.3	4.0	V	(1),(2)
		VCI	-0.3	4.0	V	(1),(2)
	Power	ELVDD	-0.3	6	V	-
		ELVSS	-10	0.3	V	-
Input voltage		VI	-0.3	VCCIO+0.3	V	(2)
Operating temperature		Top	-20	70	℃	-
Humidity		Hop	10	95	%(RH)	-
Storage temperature		Tstg	-30	85	℃	-

Note 1) VDD, VCCIO1,2, VCI should satisfy the below condition of VDD, VCCIO1,2, VCI > VSS (AGND).

Note 2) If the supplied voltage exceeds the maximum limitation, LSI can be damaged permanently. Therefore, while operating, it is recommend to use LSI within the maximum electrical limitation.
If not, LSI can cause decreased reliability or operational problems.

SAMSUNG Mobile Display CO., LTD.(All Rights Reserved).

One step solution for LCD / PDP / OLED panel application: Datasheet, inventory and accessory! www.panelook.com

Global LCD Panel Exchange Center www.panelook.com 屏库:全球液晶屏交易中心

6. Electrical Characteristics

-. Test Conditions: VCCIO1=3.0V, VCCIO2=1.8V, VCI=3.0V, VSS=0V, Temp.=25°C, Full White unless otherwise Specified.

Item		Symbol	Condition	Min.	Typ.	Max.	Unit	Note
Supply voltage	Logic	VDD	-	1.35	1.5	1.75	V	
		VCCIO1,2	-	1.65	-	3.6		
		VCI	-	2.5	-	3.6		
	Power	ELVDD	-	4.554	4.6	4.646		
		ELVSS	10 < T≤30	-4.515	-4.3	-4.085		
			T≤10	-5.145	-4.9	-4.655		
Input Voltage	"H" level	VIH	1.65<VCCIO<2.30	0.7*VCCIO	-	VCCIO	V	(1)
		VIH	2.30<VCCIO<3.60	0.8*VCCIO	-	VCCIO		
	"L" level	VIL	1.65<VCCIO<2.30	0	-	0.3*VCCIO		
		VIL	2.30<VCCIO<3.60	0	-	0.2*VCCIO		
Output Voltage	"H" level	VOH	IOH = -0.4mA	VCCIO-0.4	-	-	V	(2)
	"L" level	VOL	IOL = 0.4mA	-	-	0.4		
Leakage Current	Input leakage	ILI	VI=GND or VCCIO	-1	-	1	uA	(1)
	output leakage	IIL		-1	-	1	uA	(3)
Supply Current (1)	EL Power (300cd/m² Full White.)	IBAT	ELVDD=4.6V ELVSS= -4.3 (VBAT=3.8V)	-	310	410	mA	-
Module Current Consumption		IVCCIO1,2	VCCIO1=3.0V	-	3.8	5	mA	
			VCCIO2=1.8V	-	11	15	mA	
		IVCI	VCI=3.0V	-	30	40	mA	-
		Istby	VCCIO1=3.0V		0.2	0.3	mA	
			VCCIO2=1.8V		0.2	0.3	mA	
			VCI=3.0V		0.3	0.4	mA	

Note)

VCCIO1 : Power pin for logic I/O for RESETB, CSB, SCL, SDI, RS.

VCCIO2 : Power pin for logic I/O for DB[23:0], DOTCLK, HSYNC, VSYNC

IBAT 消費電流値が300cd/m2基準400mAを超える場合 輝度を260cd/m2に調整します

Note1) DB[23:0], VSYNC, HSYNC, DOTCLK, SCL, CSB, SDI, RESETB ports

Note2) DB[23:0] ports

Note3) Applicable at DB[23:0] = high impedance state

SAMSUNG Mobile Display CO., LTD.(All Rights Reserved).

One step solution for LCD / PDP / OLED panel application: Datasheet, inventory and accessory! www.panelook.com

Global LCD Panel Exchange Center www.panelook.com 屏库:全球液晶屏交易中心

7. Electro-Optical characteristics

Item		Symbol	Temp	Condition	Min.	Typ.	Max.	Unit	Note
Brightness			25℃	Normal (White Mode)	240	300	360	cd/m²	(1)
Uniformity			25℃	Normal (White Mode)	70	85	-	%	(1)
Contrast ratio		K	25℃	Φ=0°,θ=0°	2000	10000	-	-	(2)
Color of CIE coordinate	White	x	25℃	Φ=0° θ=0°	0.273	0.293	0.313	-	(1),(2),(3) (4)
		y			0.285	0.305	0.325	-	
	Red	x			0.625	0.675	0.725	-	
		y			0.275	0.325	0.375	-	
	Green	x			0.170	0.220	0.270	-	
		y			0.675	0.725	0.775	-	
	Blue	x			0.095	0.145	0.195	-	
		y			0.005	0.055	0.105	-	
Color Gamut			25℃	vs. NTSC	90	100	-	%	-
Crosstalk			25℃		-	-	4	%	(5)
Viewing angle			25℃	Upper/Down/Right/Left CR ratio ≥200	Over 80°				-
Response Time			25℃		-	-	1	ms	-

Note (1) Uniformity measuring point

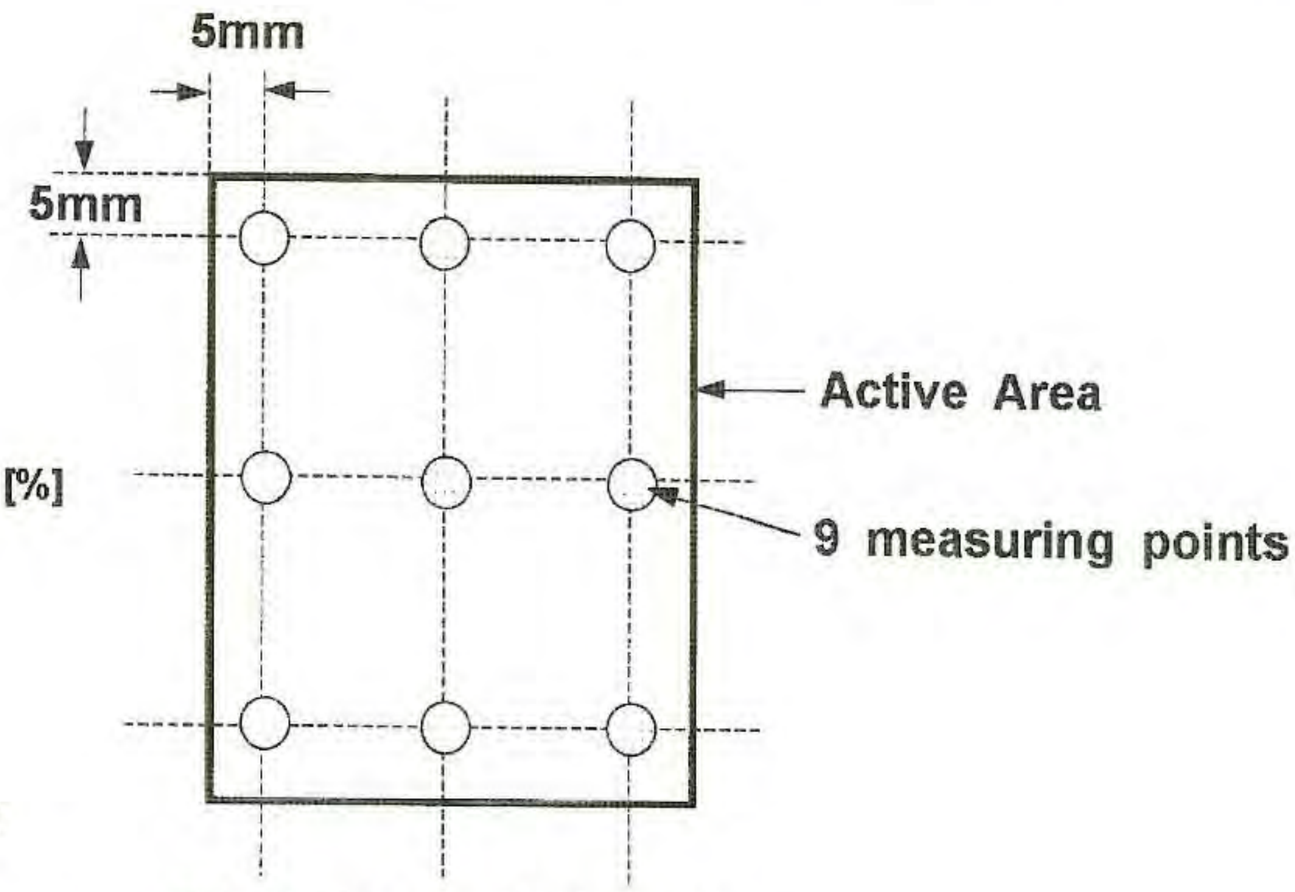

Uniformity = Lmin / Lmax * 100 [%]

Note (2) Defiition of contrast ratio (K)

$$\text{Contrast Ratio(K)} = \frac{\text{Brightness of selected dot (White patterned area) at 300cd/m}^2}{\text{Brightness of non-selected dot (Black patterned area) at 300cd/m}^2}$$

SAMSUNG Mobile Display CO., LTD.(All Rights Reserved).

One step solution for LCD / PDP / OLED panel application: Datasheet, inventory and accessory! www.panelook.com

Global LCD Panel Exchange Center www.panelook.com 屏库:全球液晶屏交易中心

Note (3) Optical measuring system, temperature regulated chamber
external Light : dark state

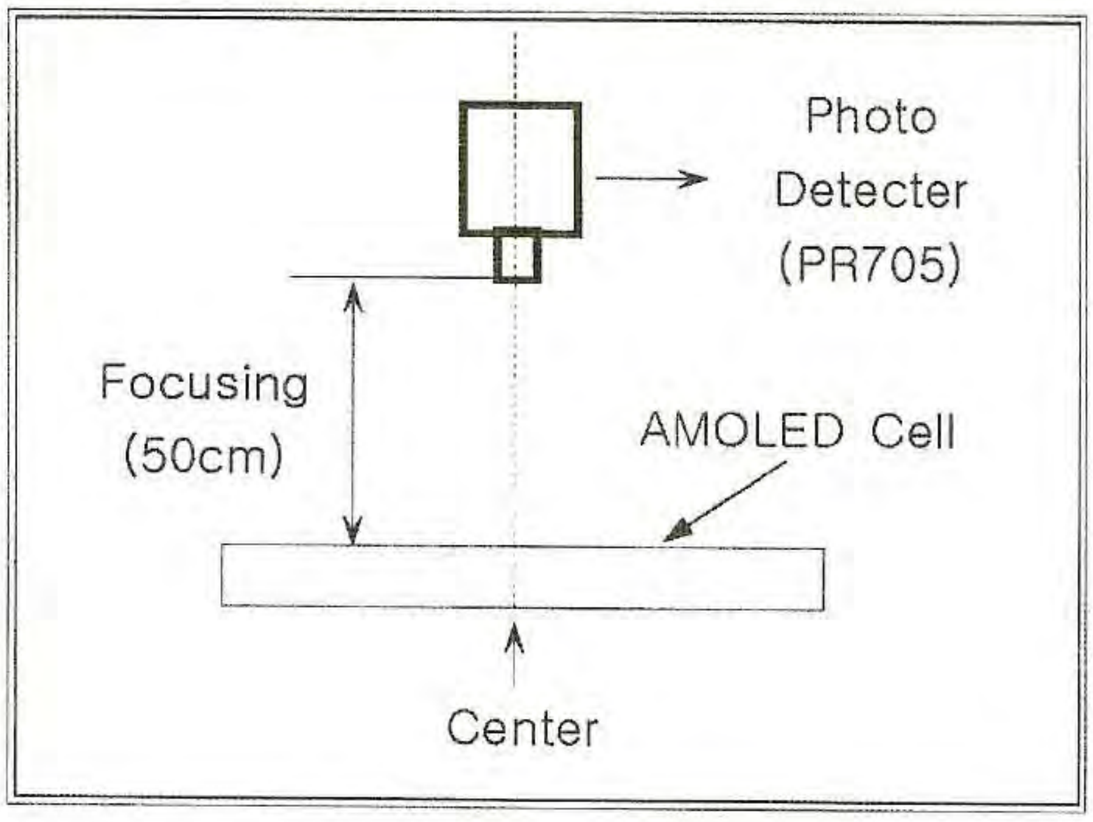

Note (4) Define of Φ and θ

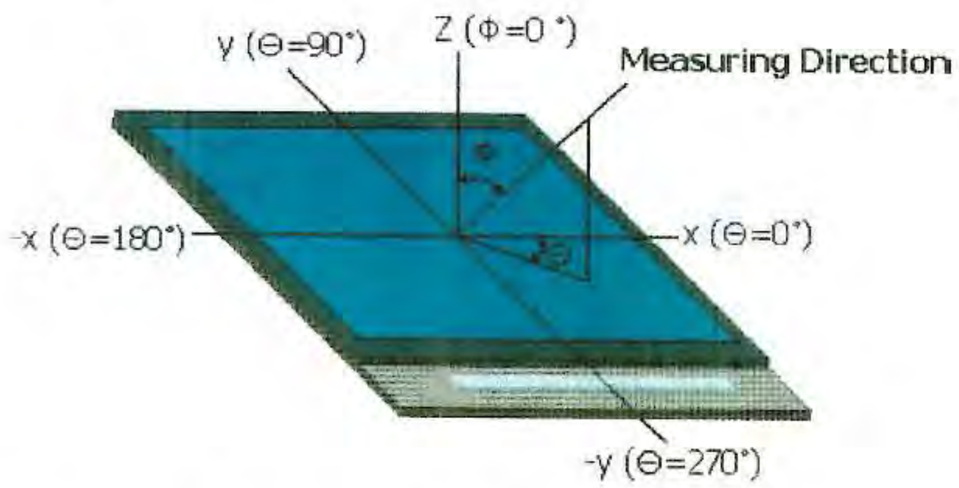

Note (5) Less than 4%, unless detected by visual.

f Crosstalk is detected by visual, we shall negotiate and agree to solution with customer.

※ Define of Crosstalk ※

Measure the luminance of 9 points at White box, Black box, 128 gray pattern.

Compare the White box/128grey pattern 2 points

box pattern. Calculate the luminance ratio between near 2 area and and check the maximum value.

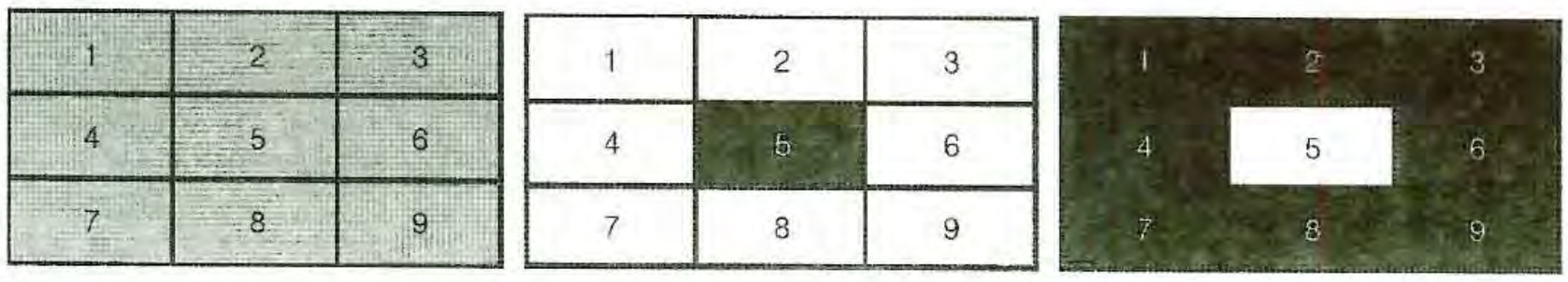

Note) If Flicker is detected by visual, we shall negotiate and agree to solution with customer.

SAMSUNG Mobile Display CO., LTD.(All Rights Reserved).

One step solution for LCD / PDP / OLED panel application: Datasheet, inventory and accessory! www.panelook.com

Global LCD Panel Exchange Center www.panelook.com 屏库:全球液晶屏交易中心

8. Input/Output Terminal Assignment

8-1. I/O Connection

#	Pin name	Descriptions	Connection to Component	
1	GND	Ground		
2	ELVDD	Positive voltage of DC/DC		
3	ELVDD			
4	ELVSS	Negative voltage of DC/DC		
5	ELVSS			
6	VGL	A power for gate driver		1000nF/10V
7	VINT	A power for gate driver		1000nF/10V
8	VGH	A power for gate driver		1000nF/10V
9	VREGOUT	A reference voltage for grayscale generation block		1000nF/6.3V
10	VREFO	A reference voltage input pin of VCI1 generator		4700nF/6.3V
11	RVDD	Regulated logic power voltage(1.5V)		1000nF/6.3V
12	VCI	Power pin for analog		
13	VCCIO2	Power pin for logic I/O (1.65~3.6V)		
14	EL_ON	External DC/DC on/off control signal		
15	DB0	Image data input bus for RGB interface		
16	DB1			
17	DB2			
18	DB3			
19	DB4			
20	DB5			
21	DB6			
22	DB7			
23	DB8			
24	DB9			
25	DB10			
26	DB11			
27	DB12			
28	DB13			
29	DB14			
30	DB15			
31	DB16			
32	DB17			
33	DB18			
34	DB19			
35	DB20			
36	DB21			
37	DB22			
38	DB23			
39	GND	Ground		
40	DOTCLK	Pixel clock signal		
41	GND	Ground		
42	HSYNC	Horizontal line synchronizing signal		
43	VSYNC	Frame synchronizing signal		
44	SDI	Serial data transfer I/O in SPI interface		
45	SCL	Synchronous clock for SPI interface		
46	CSB	Chip select signal for SPI interface		
47	RESETB	Reset pin		
48	VCCIO1	Power pin for logic I/O (1.65~3.6V)		
49	OTPV	SMD internal use, open when is not used		
50	VCI1	A reference voltage for boosting circuit		1000nF/6.3V
51	VLOUT1	Step-up voltage output for boosting circuit		1000nF/10V
52	C11P	Flying capacitor for step-up circuit		1000nF/6.3V
53	C11M			
54	C12P			1000nF/6.3V
55	C12M			
56	VLOUT3	Step-up voltage output for boosting circuit		1000nF/16V
57	VLOUT2			RB520G-30GT2R,30V,100mA 1000nF/16V
58	C2P	Flying capacitor for step-up circuit		1000nF/16V
59	C2M			
60	C3P			1000nF/16V
61	C3M			

SAMSUNG Mobile Display CO., LTD.(All Rights Reserved).

One step solution for LCD / PDP / OLED panel application: Datasheet, inventory and accessory! www.panelook.com

Global LCD Panel Exchange Center www.panelook.com 屏库:全球液晶屏交易中心

8-2. Circuit block diagram (Module)

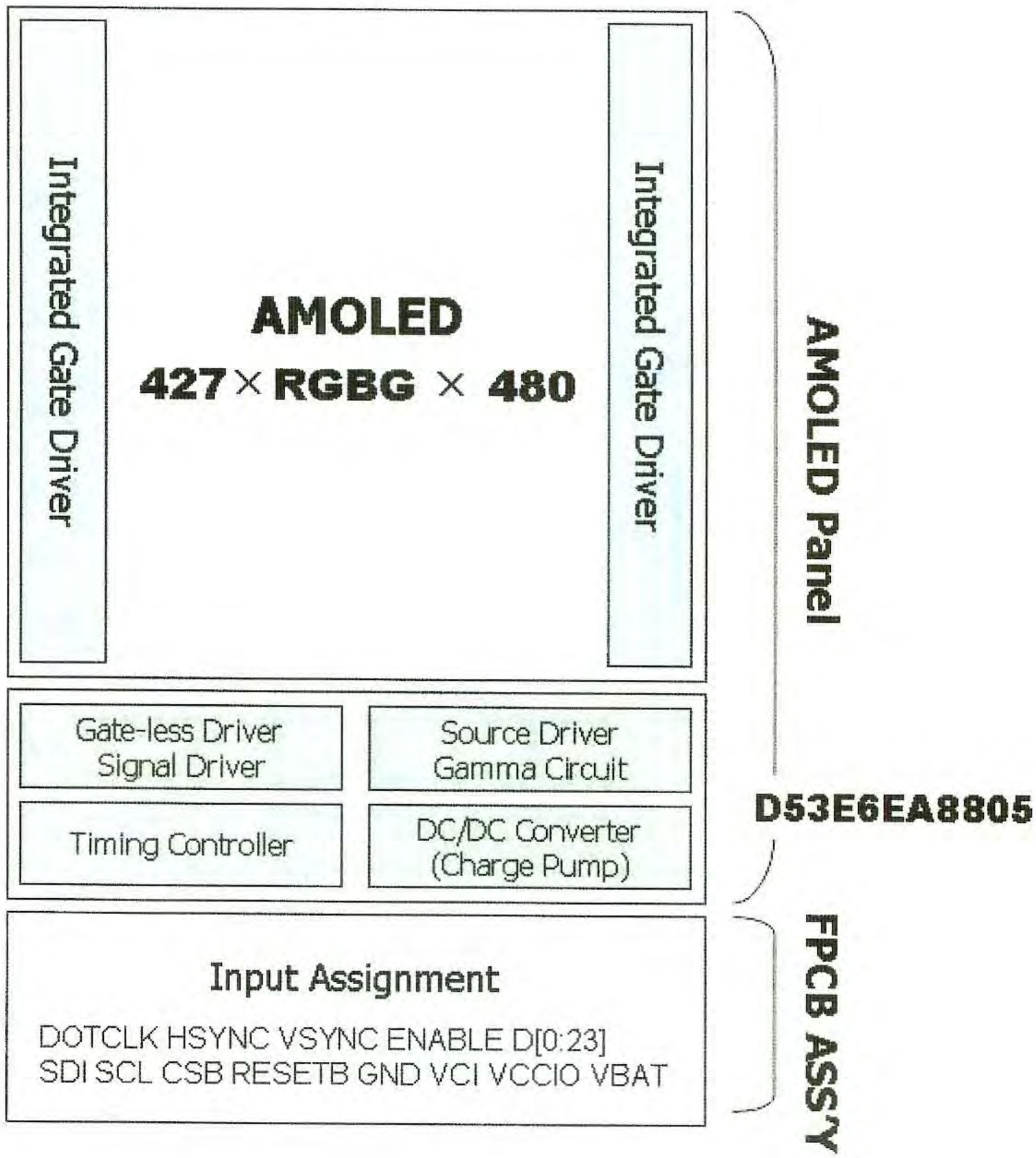

SAMSUNG Mobile Display CO., LTD.(All Rights Reserved).

One step solution for LCD / PDP / OLED panel application: Datasheet, inventory and accessory! www.panelook.com

Global LCD Panel Exchange Center www.panelook.com 屏库:全球液晶屏交易中心

8-3. Circuit block diagram (IC)

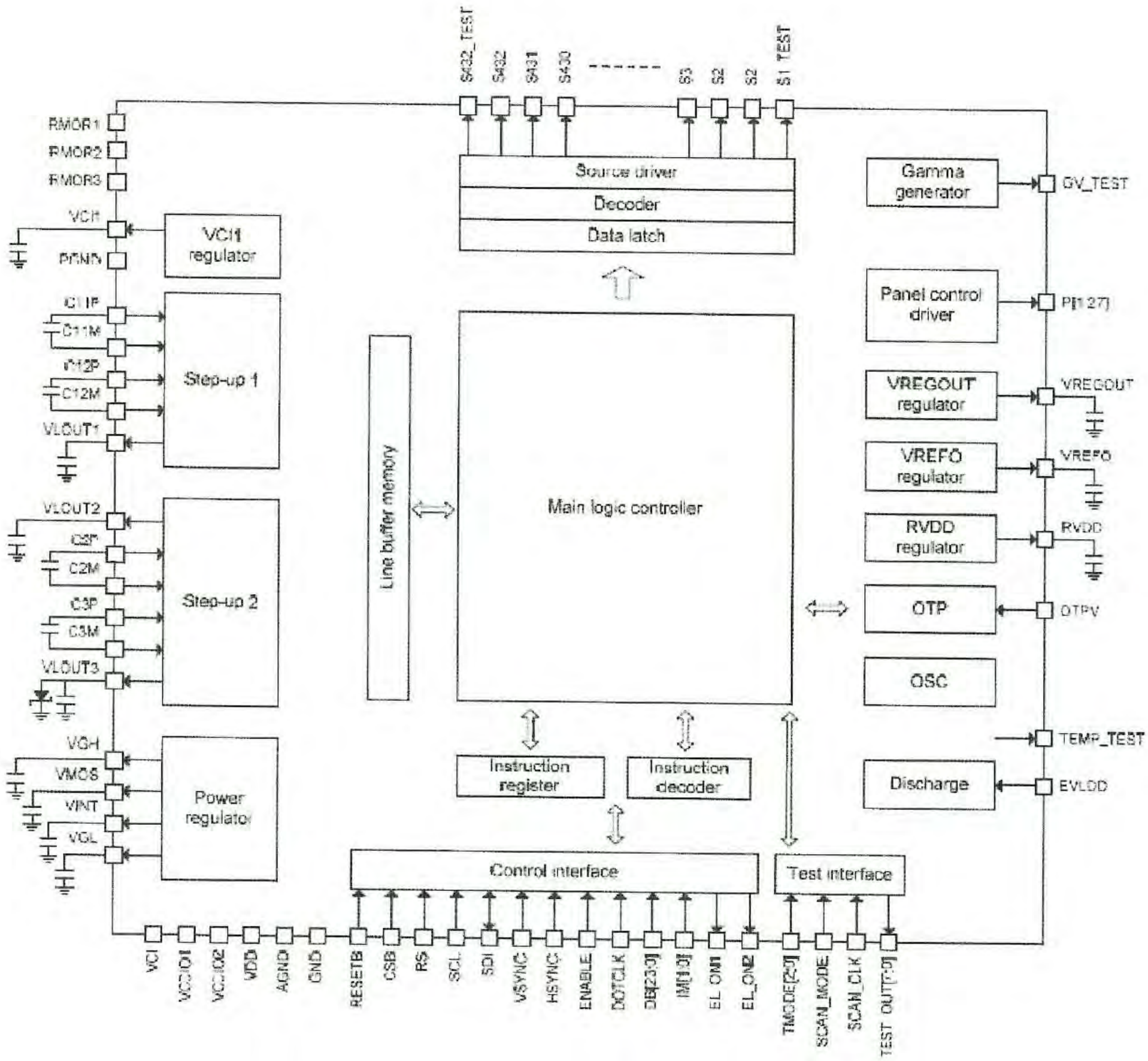

SAMSUNG Mobile Display CO., LTD.(All Rights Reserved).

One step solution for LCD / PDP / OLED panel application: Datasheet, inventory and accessory! www.panelook.com

Global LCD Panel Exchange Center www.panelook.com 屏库:全球液晶屏交易中心

8-4. Driver IC IO Pin Equivalent Circuit & Input Capacitance

*Capacitance Measure Point : Driver IC Input Pin

Pin name	I/O	Capacitance
RESETB, CSB, RS, SCL, VSYNC, HSYNC, DOTCLK, DB[23:0]	Input	0.2pF
SDI	In/Out	0.4pF
EL_ON	Output	0.35pF

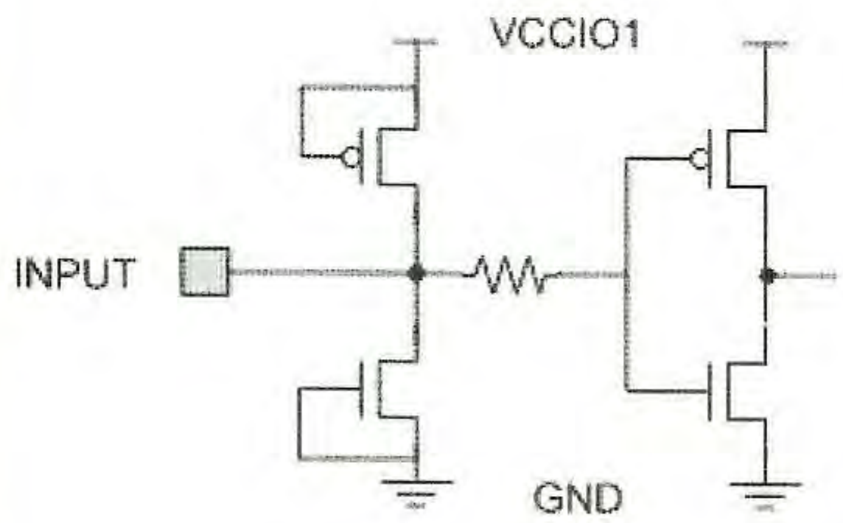

<RESETB, CSB, SCL, RS>

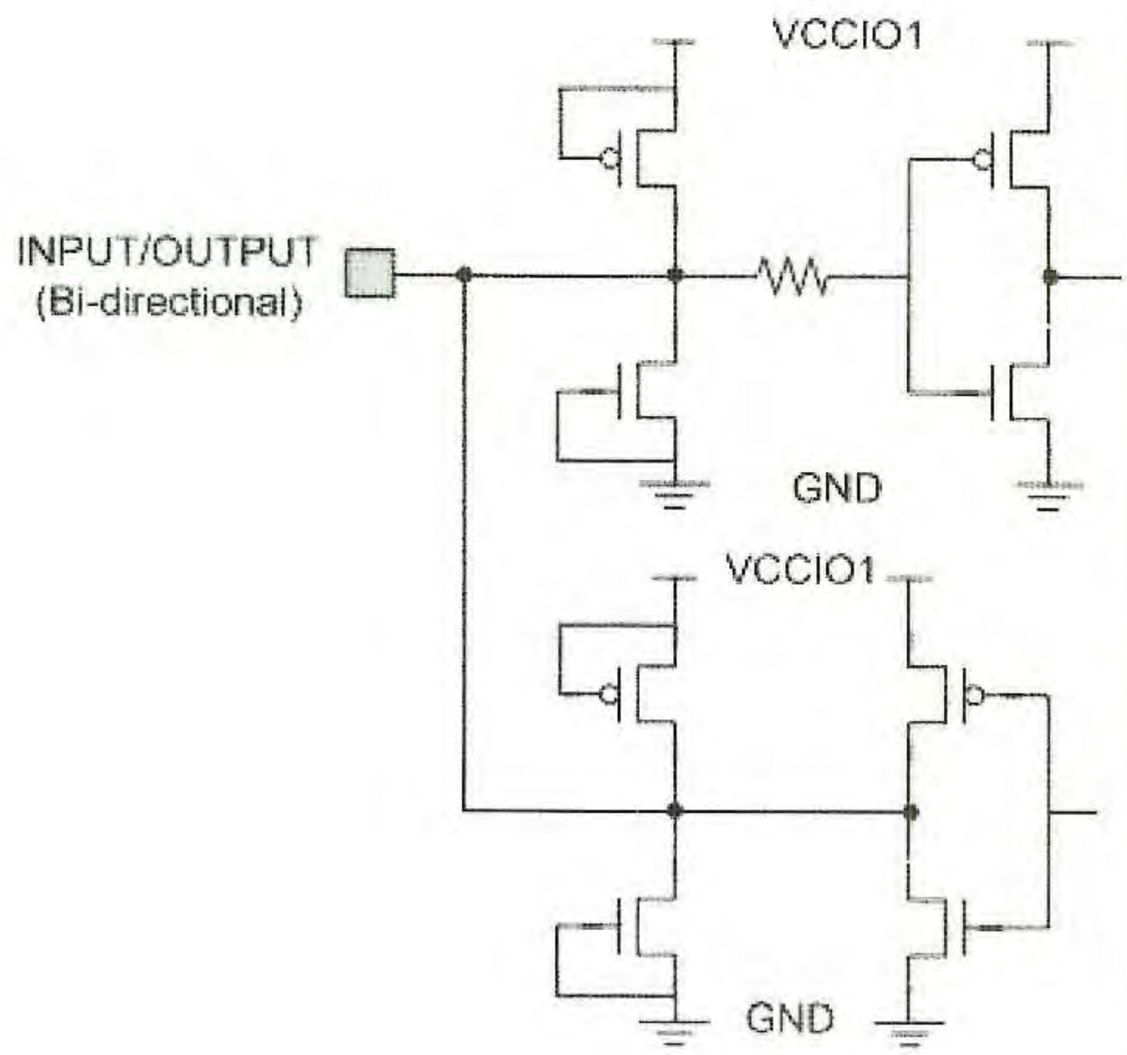

< SDI>

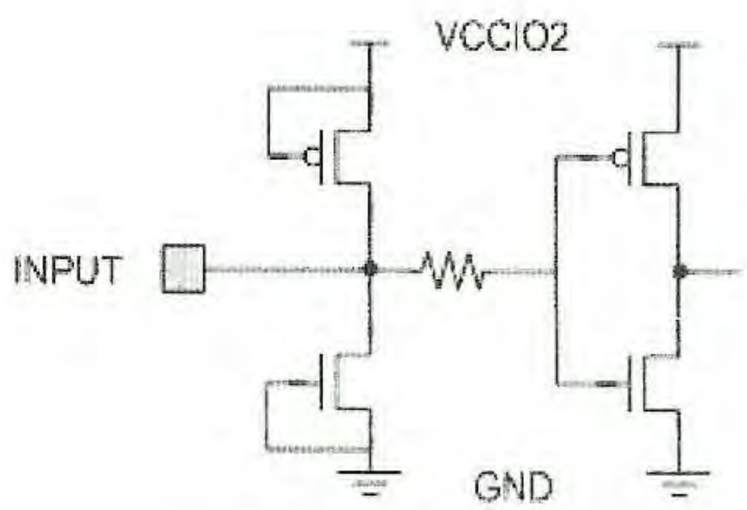

<VSYNC, HSYNC, DOTCLK, DB [23:0]

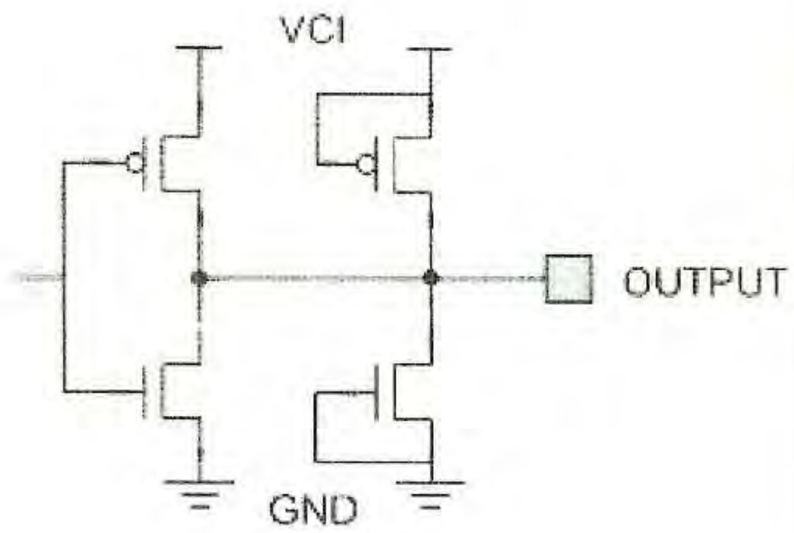

<EL_ON>

SAMSUNG Mobile Display CO., LTD.(All Rights Reserved).

One step solution for LCD / PDP / OLED panel application: Datasheet, inventory and accessory! www.panelook.com

Global LCD Panel Exchange Center www.panelook.com 屏库:全球液晶屏交易中心

9 Recommended Operating Sequence

9-1. RGB Interface Timing

RGB interface is composed of VSYNC, HSYNC , DOTCLK

1) VLW (period of VSYNC signal's "Low" level) = 2 x HSYNC period
2) HLW (period of HSYNC signal's "Low" level) = 2 x DOTCLK period
3) VBP (Vertical Back Porch) = 38 x HSYNC period
4) VFP (Vertical Front Porch) = 22 x HSYNC period
5) HBP (Horizontal Back Porch) = 122 x DOTCLK period
6) HFP (Horizontal Front Porch) = 25 x DOTCLK period

Signals (VSYNC, HSYNC and DB[23:0]) for RGB interface are latched by rising edge of DOTCLK. Therefore input of these signals (VSYNC, HSYNC and DB[23:0]) must be transition at falling DOTCLK.

DOTCLK Frequency = Frame frequency X (tVBP +Vdisplay + tVFP) X (tHBP + Hdisplay +tHFP)
= 59.94 X (38 +480 +22) X (122 +854 +25) ≒ 32.4MHz

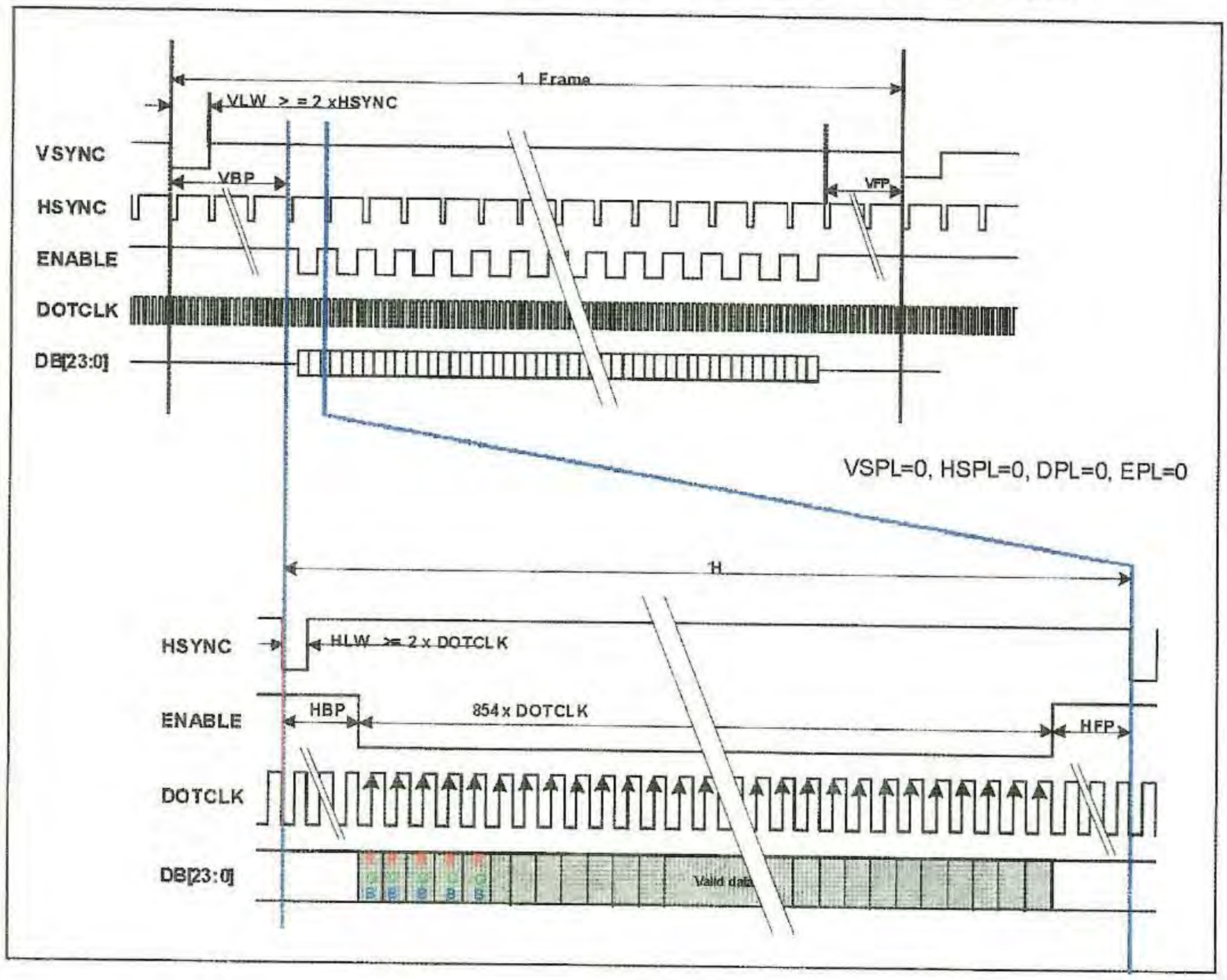

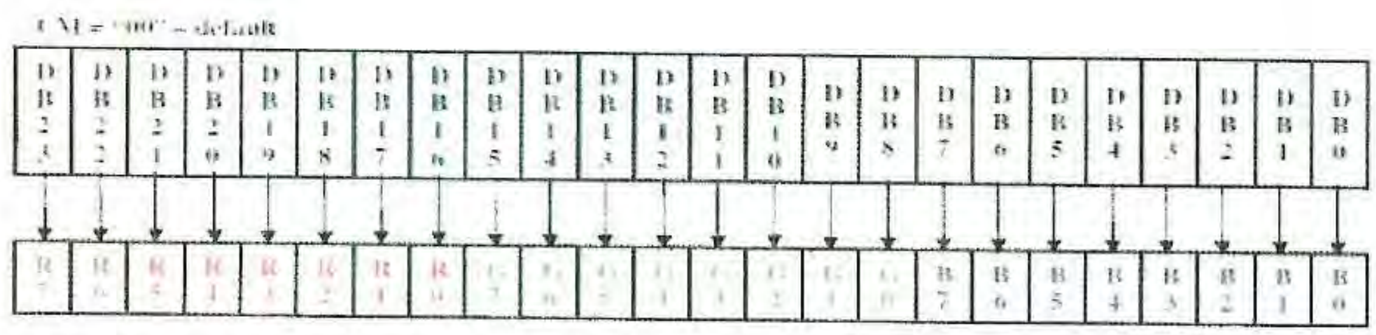

SAMSUNG Mobile Display CO., LTD.(All Rights Reserved).

One step solution for LCD / PDP / OLED panel application: Datasheet, inventory and accessory! www.panelook.com

Global LCD Panel Exchange Center www.panelook.com 屏库:全球液晶屏交易中心

★ WVGA(1229K) 854x480 @32.4MHz(NTSC/59.94Hz)

【Horizontal】

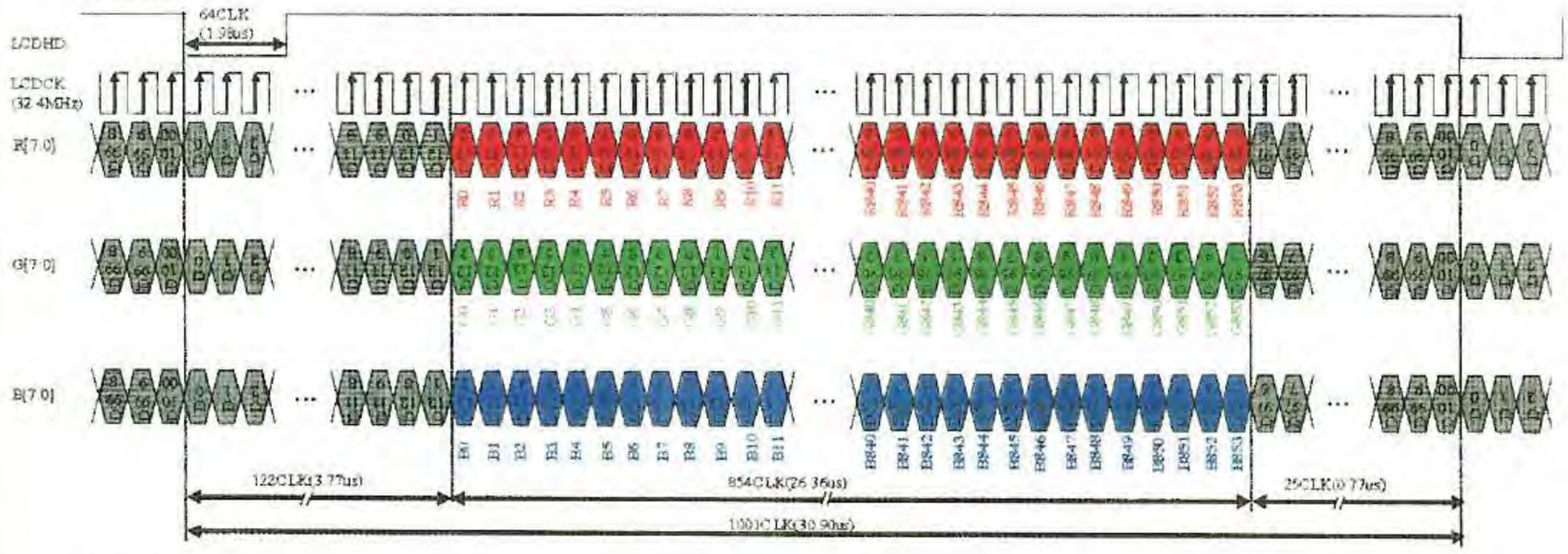

【Vertical】

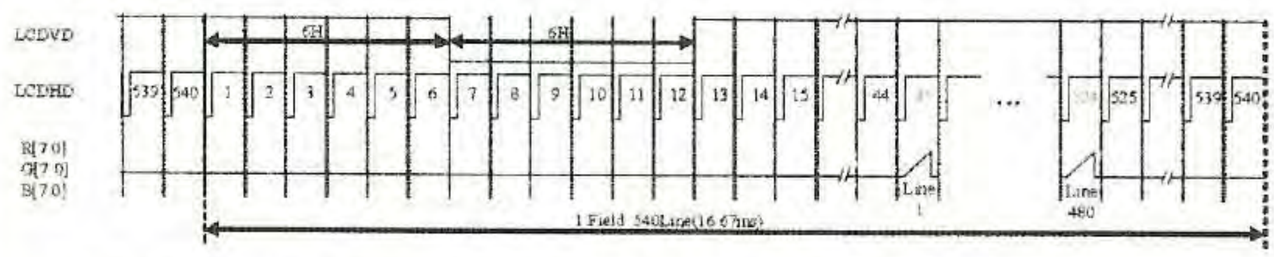

★ WVGA(1229K) 854x480 @32.4MHz(PAL/50Hz) 垂直上詰め480Line

【Horizontal】

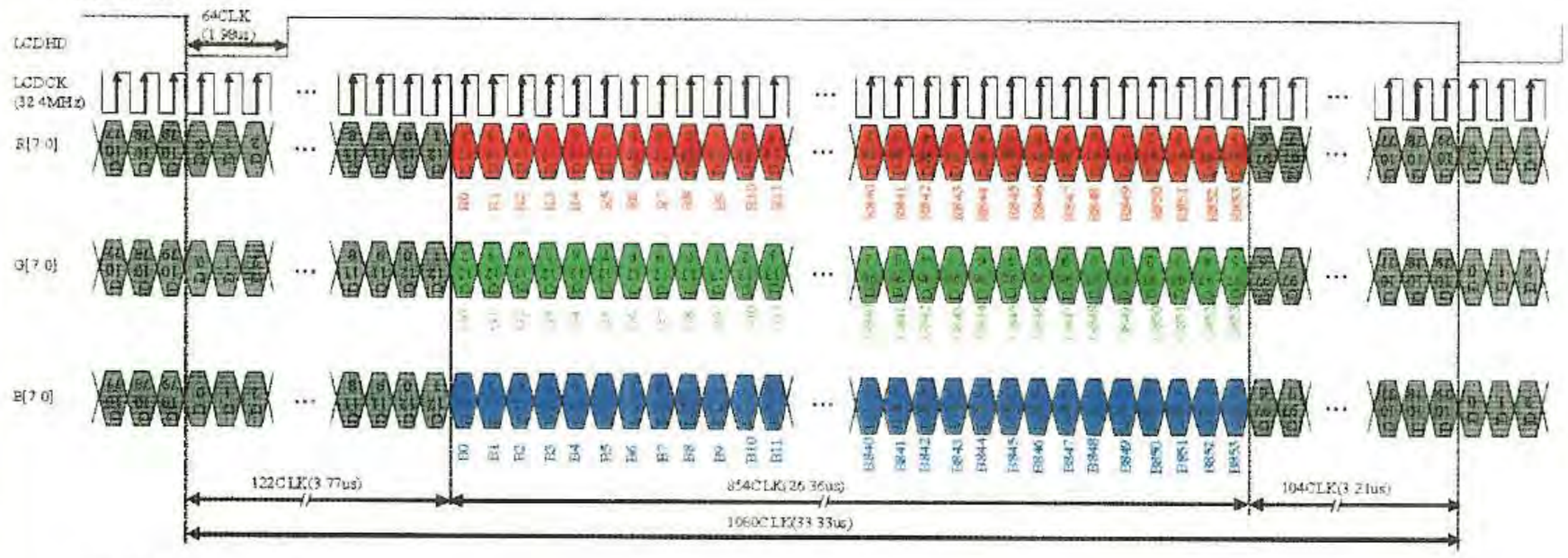

【Vertical】

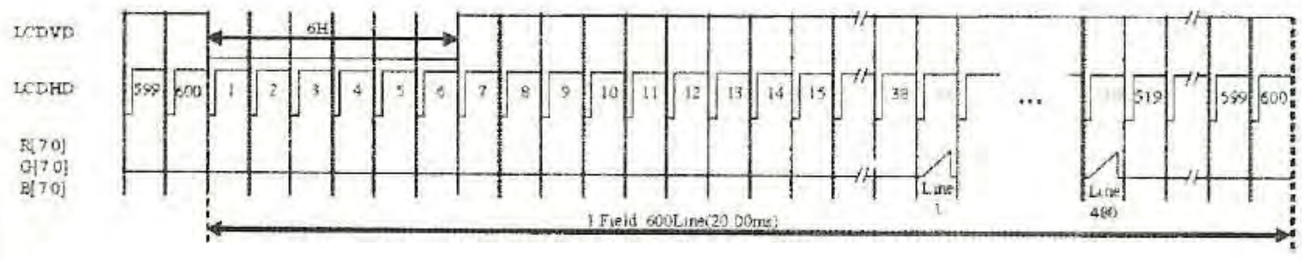

SAMSUNG Mobile Display CO., LTD.(All Rights Reserved).

One step solution for LCD / PDP / OLED panel application: Datasheet, inventory and accessory! www.panelook.com

Global LCD Panel Exchange Center www.panelook.com 屏库:全球液晶屏交易中心

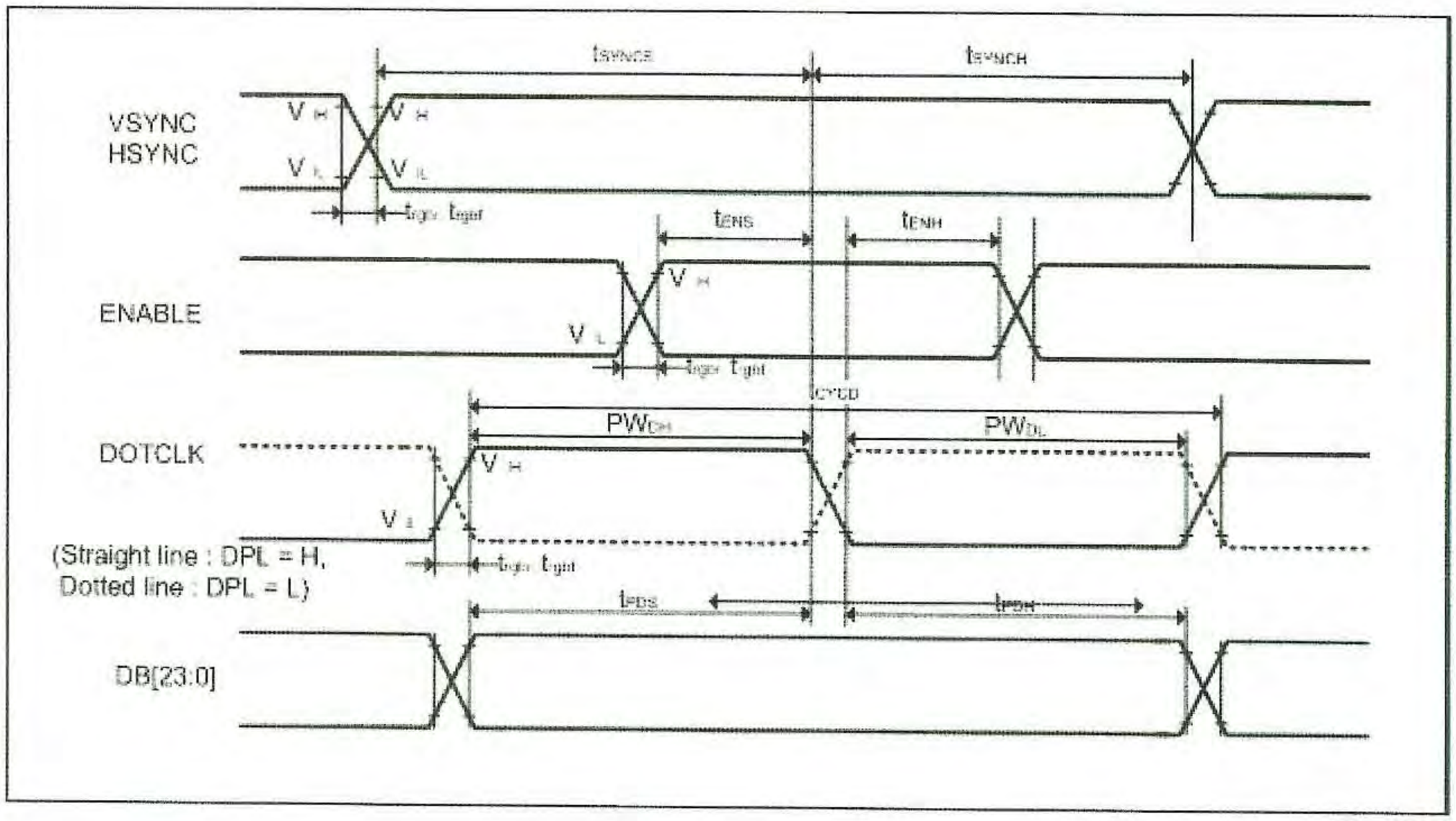

Figure 4-2-2-6. RGB & YUV input timing

Table 4-2-2-6. AC characteristic for RGB interface

Item	Symbol	min	max	Unit	Description
VSYNC, HSYNC set-up time	tSYNCS	10		ns	
VSYNC, HSYNC Hold time	tSYNCH	10		ns	
ENABLE set-up time	tENS	10		ns	
ENABLE hold time	tENH	10		ns	
DOTCLK Low level width	PW_{DL}	10		ns	
DOTCLK High level width	PW_{DH}	10		ns	
DOTCLK cycle time	tCYCD	25		ns	Max 40MHz support
DATA set-up time	tPDS	7		ns	
DATA hold time	tPDH	7		ns	
Rising / falling transition time (ALL inputs)	T_{rbgr}, t_{rgbf}		15	ns	

SAMSUNG Mobile Display CO., LTD.(All Rights Reserved).

One step solution for LCD / PDP / OLED panel application: Datasheet, inventory and accessory! www.panelook.com

Global LCD Panel Exchange Center www.panelook.com 屏库:全球液晶屏交易中心

9-2. SPI MODE

- Serial interface Mode 1 (SPI1) with 16bits data transfer, IM[1:0]=0_ID

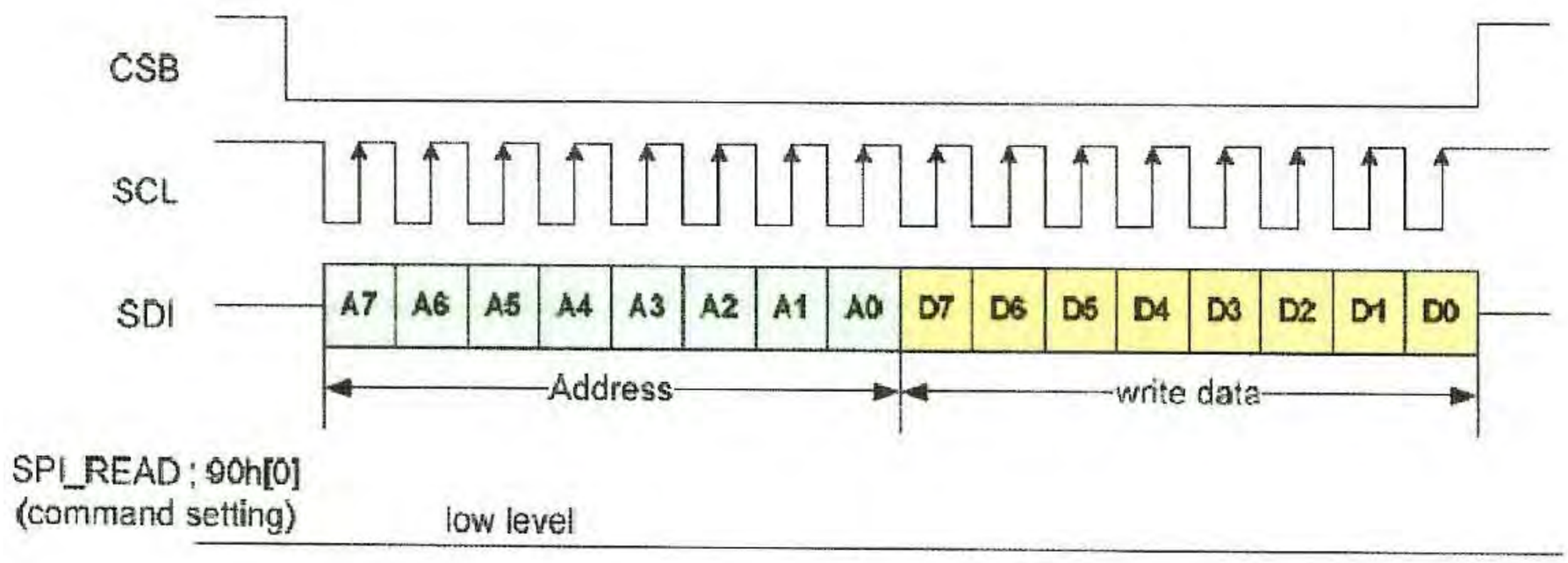

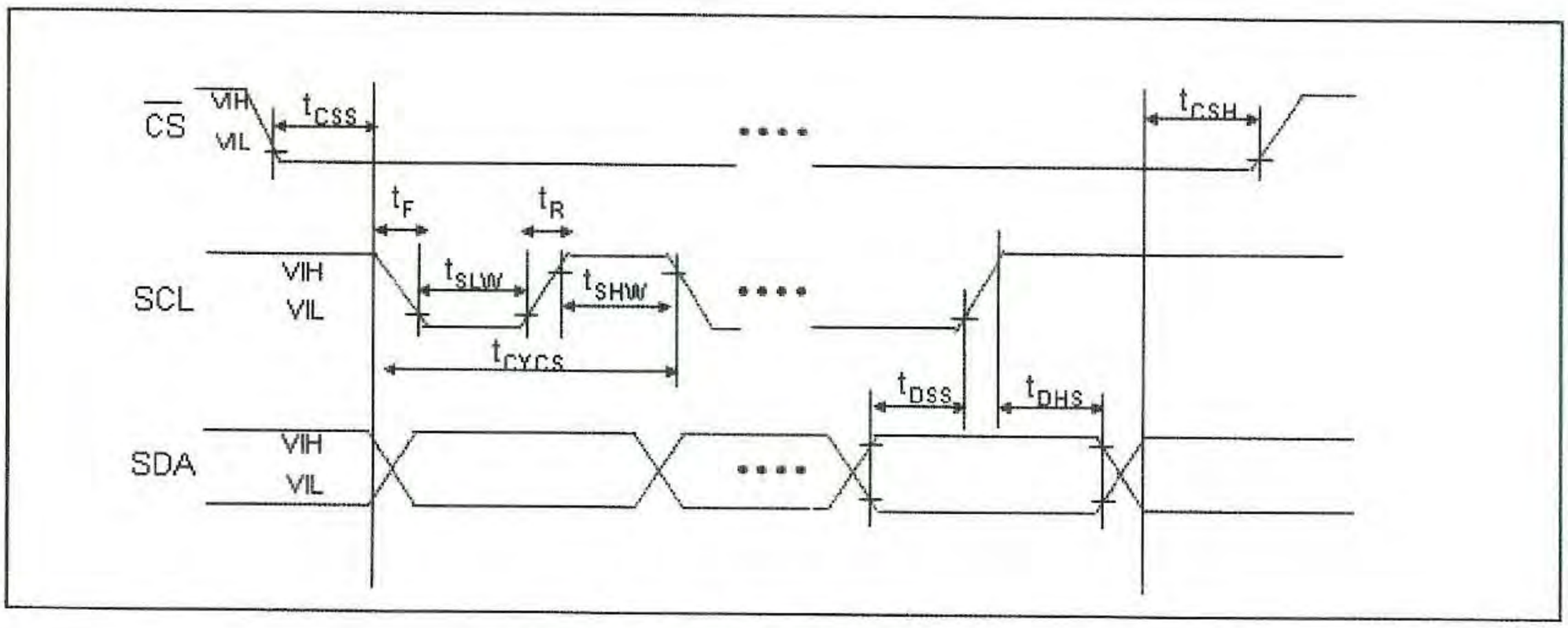

Figure 4-2-9. SPI input timing

Table 4-2-2. AC characteristic for SPI interface

Signal	Symbol	Parameter	min	max	Unit	Description
SCL	t_{CYCS}	Serial clock cycle	100	-	ns	Max 10MHz@ write operation Max 5MHz @ read operation
	t_{SHW}	"H" pulse width	40		ns	
	t_{SLW}	"L" pulse width	40	-	ns	
SDA	t_{DSS}	Data setup timing	40	-	ns	
	t_{DHS}	Data hold timing	40	-	ns	
CSB	t_{CSS}	CSB-SCL timing	40	-	ns	
	t_{CSH}	CSB hold timing	40	-	ns	
ALL inputs	t_R, t_F	Rising / falling transition time		10	ns	

SAMSUNG Mobile Display CO., LTD.(All Rights Reserved).

One step solution for LCD / PDP / OLED panel application: Datasheet, inventory and accessory! www.panelook.com

Global LCD Panel Exchange Center www.panelook.com 屏库:全球液晶屏交易中心

9-3. Power On/Off Sequence

9-3-1 Power On/Off Sequence (Sleep in mode)

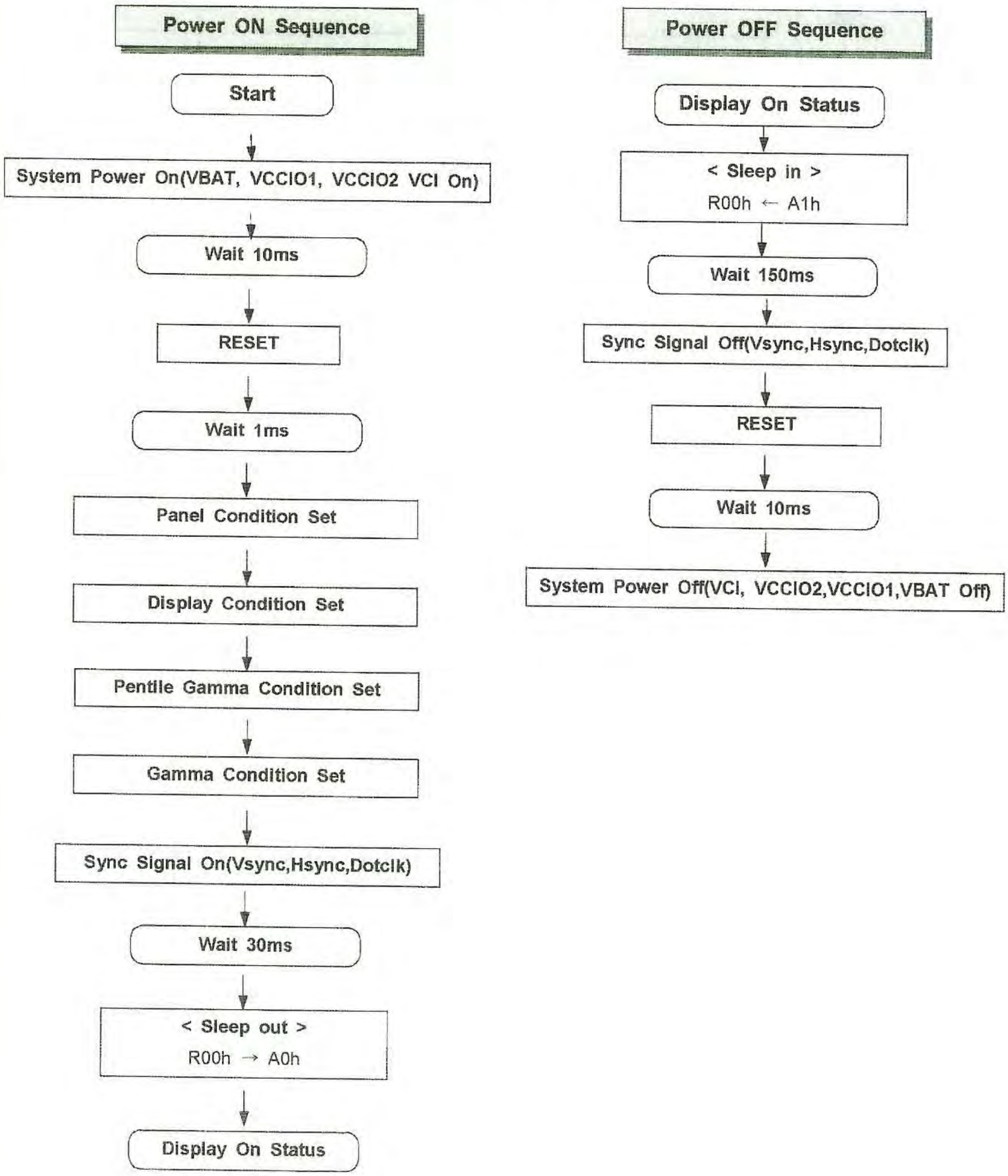

SAMSUNG Mobile Display CO., LTD.(All Rights Reserved).

One step solution for LCD / PDP / OLED panel application: Datasheet, inventory and accessory! www.panelook.com

Global LCD Panel Exchange Center www.panelook.com 屏库:全球液晶屏交易中心

9-3-2 Power On/Off Sequence (Software reset)

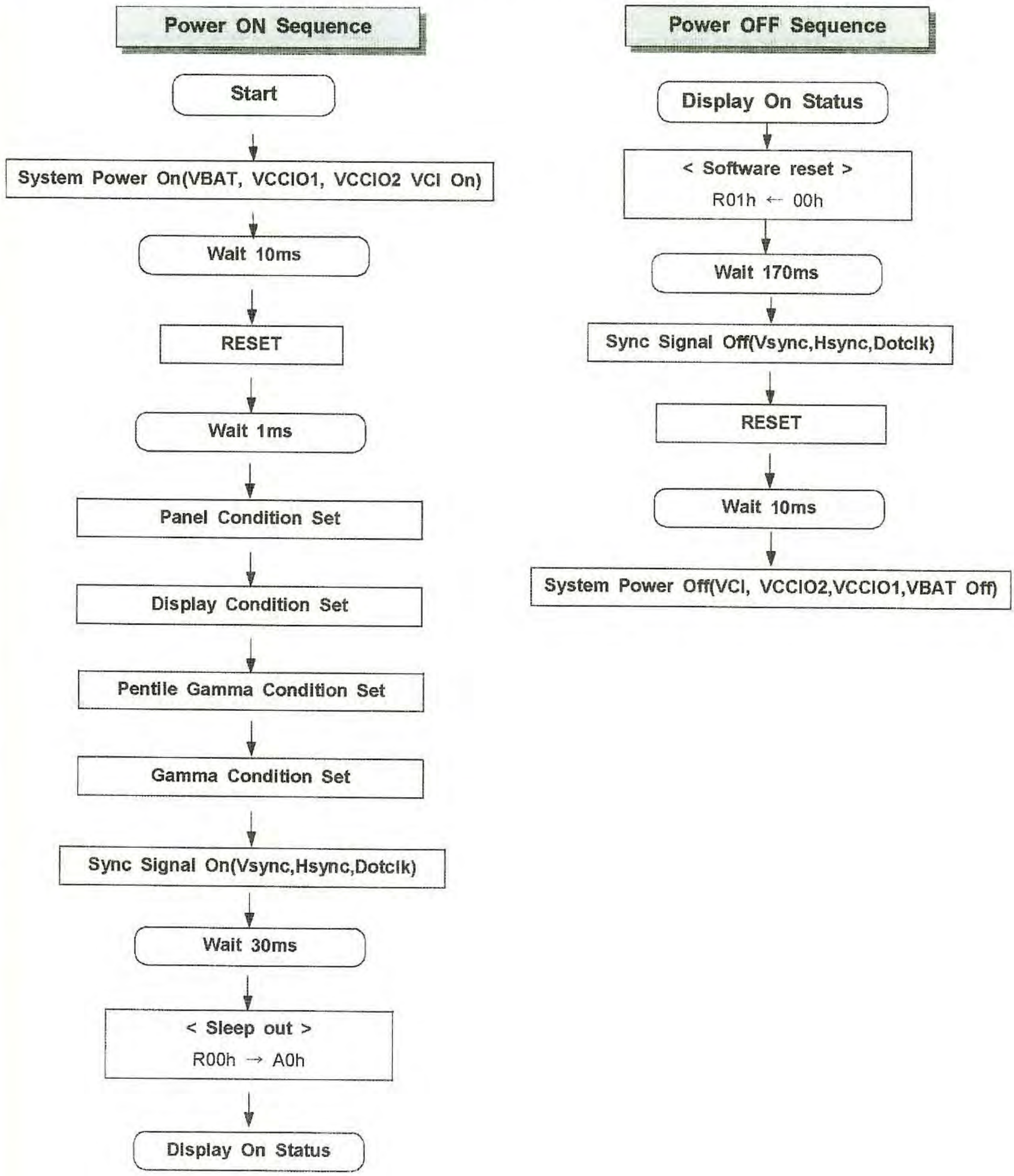

SAMSUNG Mobile Display CO., LTD.(All Rights Reserved).

One step solution for LCD / PDP / OLED panel application: Datasheet, inventory and accessory! www.panelook.com

Global LCD Panel Exchange Center www.panelook.com 屏库:全球液晶屏交易中心

9-3-3 Power On/Off Timing

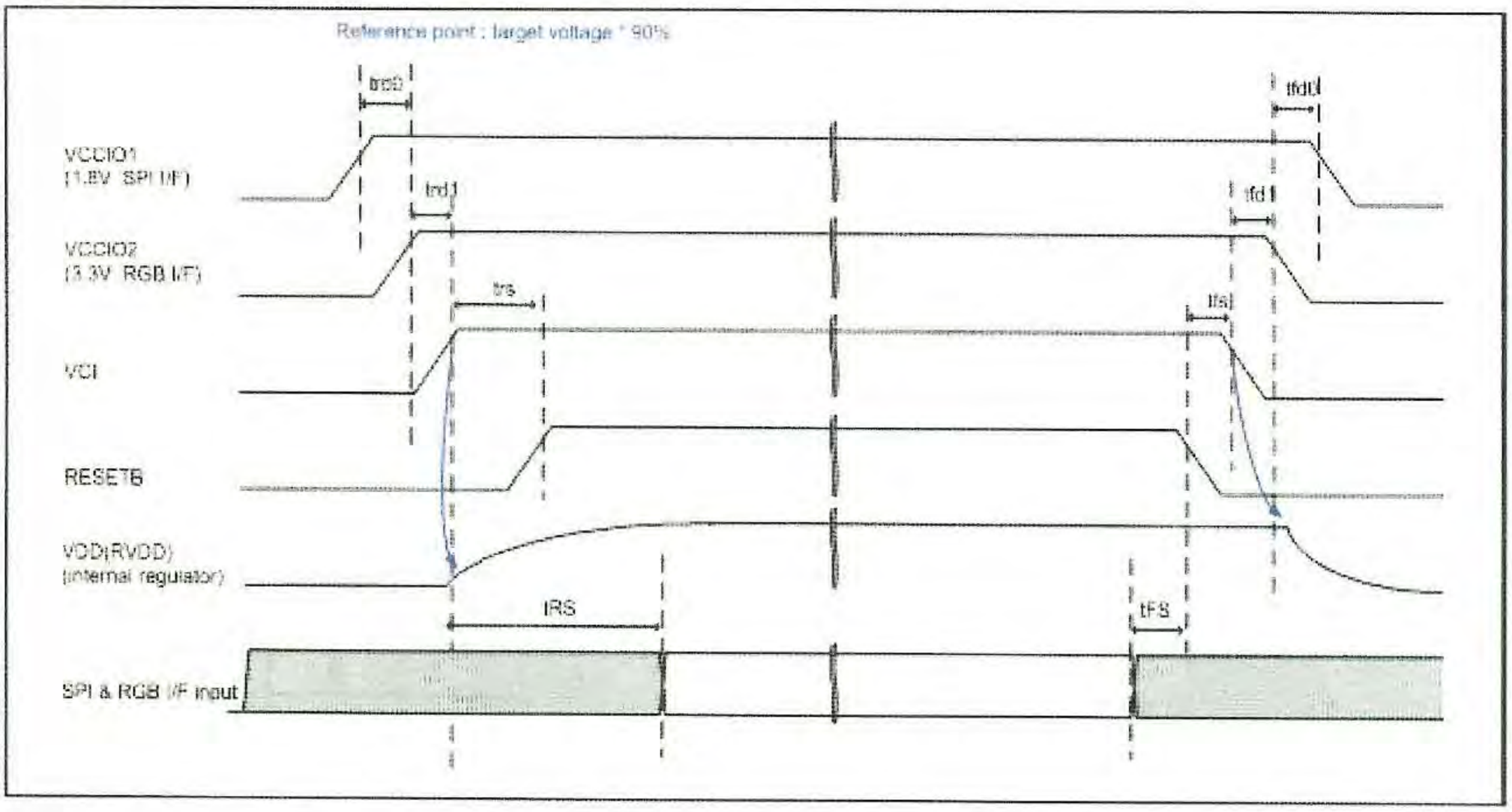

[AC timing specification for power on sequence]

(VCCIO1=1.65~3.6V ,VCCIO2=1.65~3.6V, VCI=2.5~3.6V Ta= -40~+85℃)

ITEM	SYMBOL	MIN	MAX	UNIT
Delay time 0	t_{rd0}	0	100	ms
Delay time 1	t_{rd1}	0	100	ms
Stable time	t_{rs}	10		ms
RVDD Stable time	t_{RS}	10		ms

[AC timing specification for power off sequence]

(VCCIO1=1.65~3.6V ,VCCIO2=1.65~3.6V, VCI=2.5~3.6V Ta= -40~+85℃)

ITEM	SYMBOL	MIN	MAX	UNIT
Delay time 0	t_{fd0}	0	100	ms
Delay time 1	t_{fd1}	0	100	ms
Stable time	t_{fs}	10		ms
command forbidden time	t_{FS}	1		ms

SAMSUNG Mobile Display CO., LTD.(All Rights Reserved).

One step solution for LCD / PDP / OLED panel application: Datasheet, inventory and accessory! www.panelook.com

Global LCD Panel Exchange Center www.panelook.com 屏库:全球液晶屏交易中心

9-4. Panel Condition Set

Command	Parameter	Description
R27h	02h	DOTC
R28h	88h	FLTE
R29h	65h	FLWE
R2Ah	90h	SCTE
R2Bh	55h	SCWE
R2Ch	21h	INTE
R2Dh	31h	INWE
R2Eh	10h	E_INTE
R2Fh	41h	E_INWE
R30h	21h	EMPS
R36h	05h	CLTE
R37h	07h	SHE
R38h	1Ch	CLWEA
R39h	1Ch	CLWEB
R3Ah	1Ch	CLWEC
R3Bh	1Ch	CLWED

9-5. Display Condition Set

Command	Parameter	Description
R05h	0Fh	Power Mode Setting
R15h	00h	RGB I/F:24bit
R19h	03h	Number of Data line 854
R1Ah	56h	
R1Dh	26h	VBP : 38Hsync
R1Fh	7Ah	HBP : 122Dotclk
R3Ch	57h	Dynamic ELVSS: 10 < T≤30 panel : -4.3V T≤10 panel : -4.9V
R3Eh	16h	
R3Fh	0Ch	
R40h	06h	
R41h	06h	
R42h	06h	

SAMSUNG Mobile Display CO., LTD.(All Rights Reserved).

One step solution for LCD / PDP / OLED panel application: Datasheet, inventory and accessory! www.panelook.com

Global LCD Panel Exchange Center www.panelook.com 屏库:全球液晶屏交易中心

9-6. Pentile Gamma Condition Set

Command	Parameter	Description
RFFh	01h	-
R0Ah	12h	
R0Bh	12h	
R0Ch	1Ch	
R0Dh	1Ch	
R0Eh	1Bh	
R0Fh	13h	
R10h	24h	
R11h	21h	
R2Bh	12h	
R2Ch	12h	
R2Dh	1Ch	
R2Eh	1Ch	
R2Fh	1Bh	
R30h	13h	
R31h	24h	
R32h	21h	
R4Ch	12h	
R4Dh	12h	
R4Eh	1Ch	
R4Fh	1Ch	
R50h	1Bh	
R51h	13h	
R52h	24h	
R53h	21h	
RFFh	00h	

SAMSUNG Mobile Display CO., LTD.(All Rights Reserved).

One step solution for LCD / PDP / OLED panel application: Datasheet, inventory and accessory! www.panelook.com

Global LCD Panel Exchange Center www.panelook.com 屏库:全球液晶屏交易中心

9-7. Sleep-in / Sleep-out Sequence

9-7-1. Sleep-in / Sleep-out Sequence (Sleep in mode)

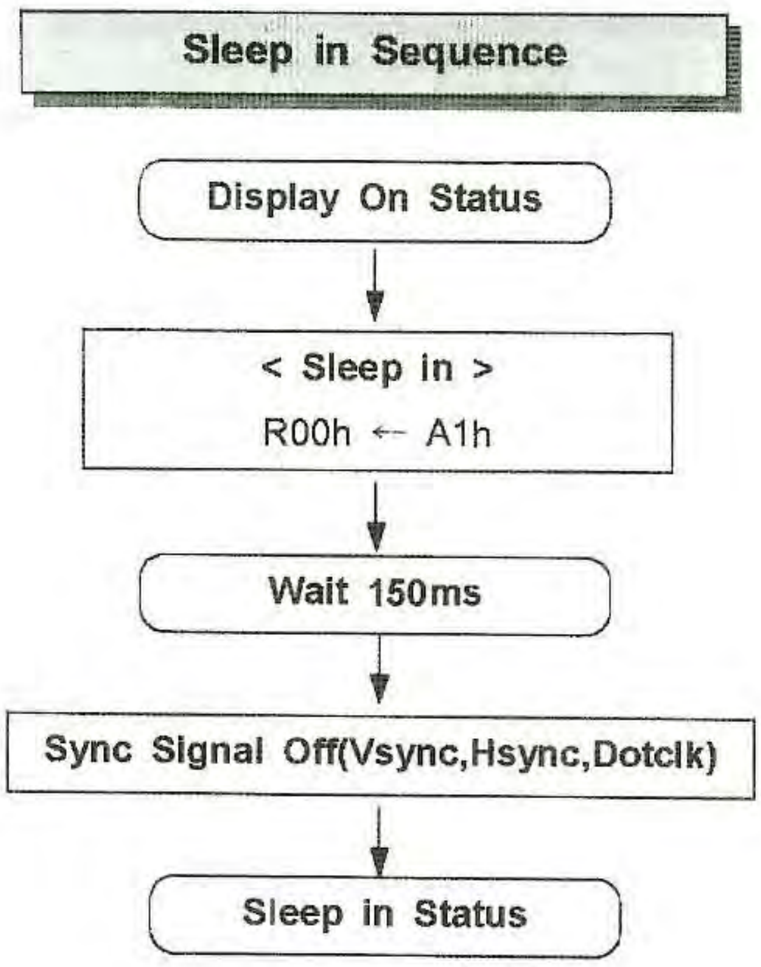

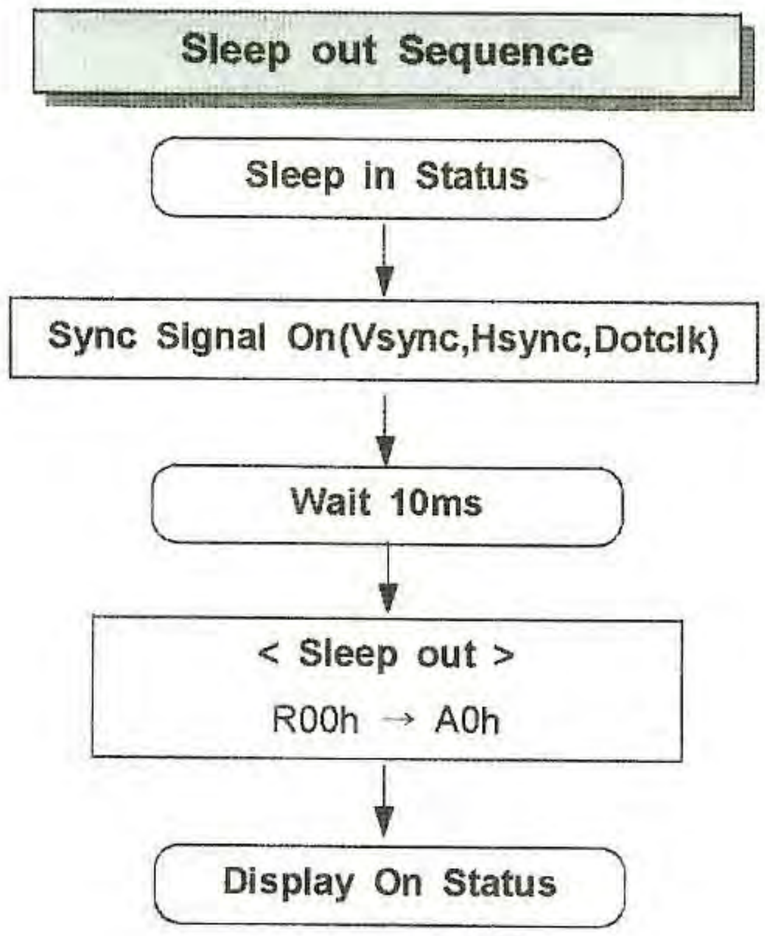

SAMSUNG Mobile Display CO., LTD.(All Rights Reserved).

One step solution for LCD / PDP / OLED panel application: Datasheet, inventory and accessory! www.panelook.com

Global LCD Panel Exchange Center www.panelook.com 屏库:全球液晶屏交易中心

9-7-2. Sleep-in / Sleep-out Sequence (Software reset)

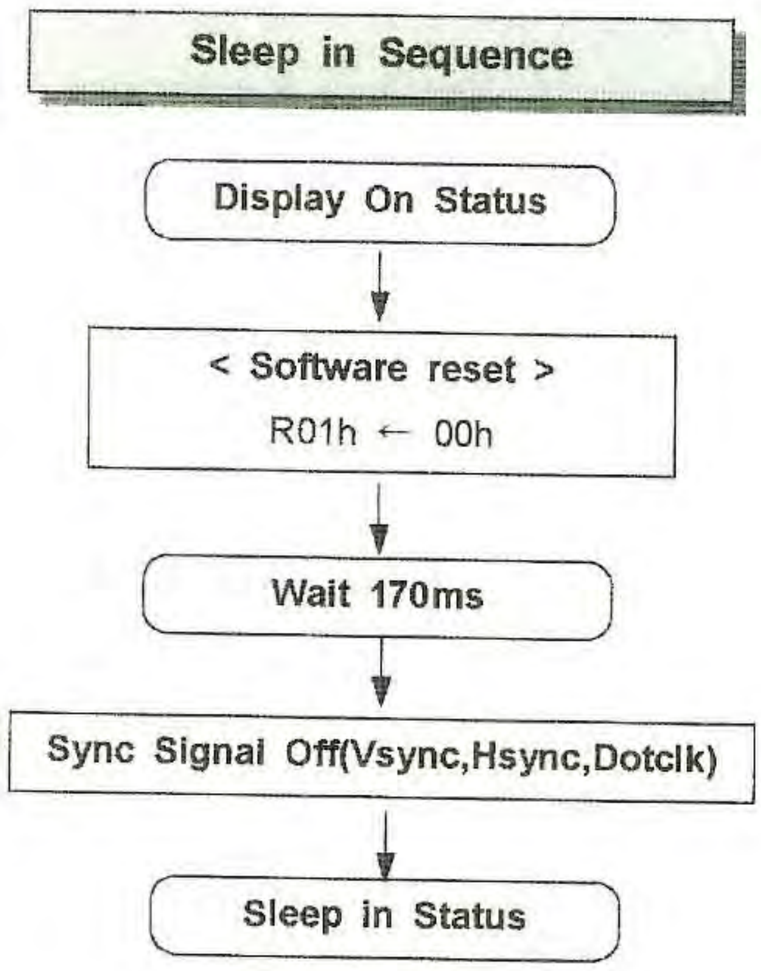

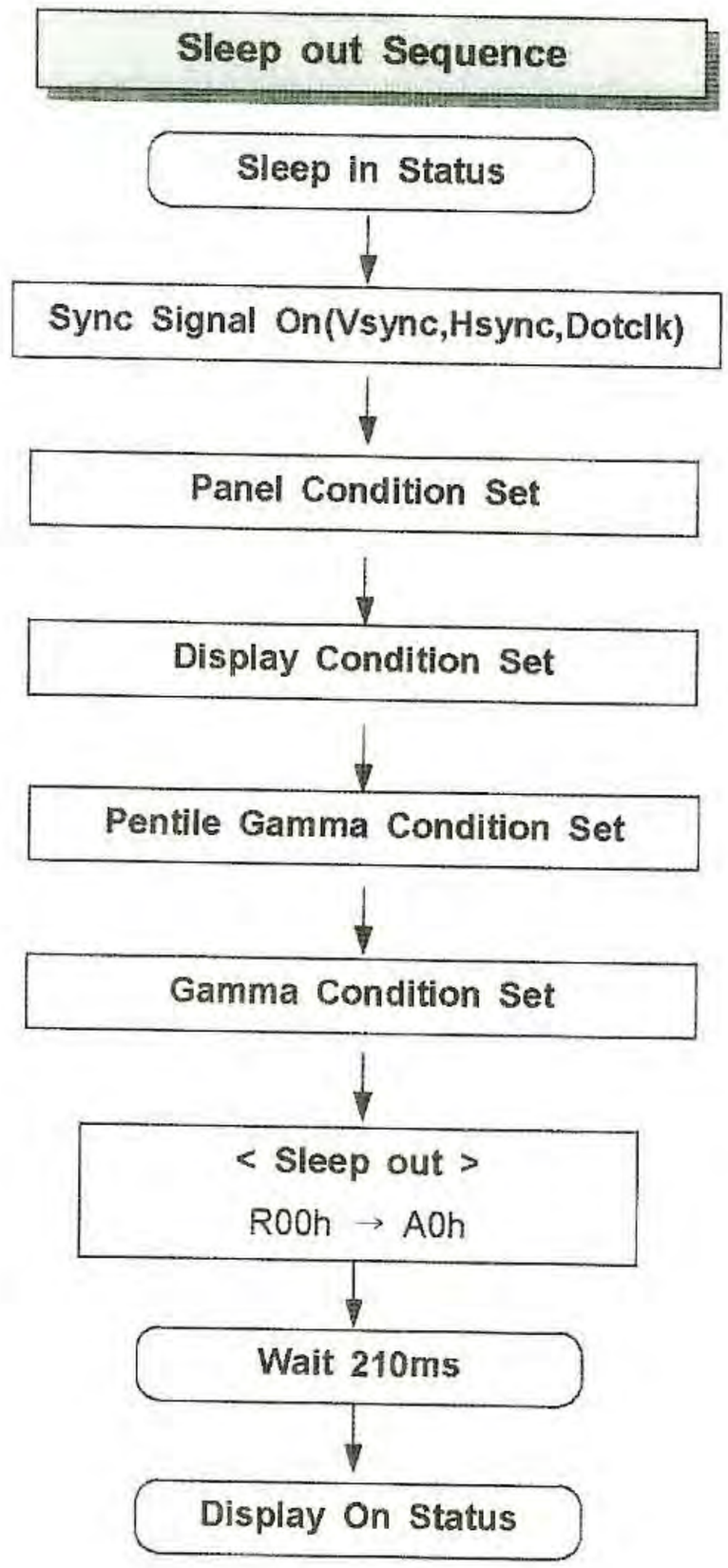

SAMSUNG Mobile Display CO., LTD.(All Rights Reserved).

One step solution for LCD / PDP / OLED panel application: Datasheet, inventory and accessory! www.panelook.com

Global LCD Panel Exchange Center www.panelook.com 屏库:全球液晶屏交易中心

9-8. Dimming Mode

Dimming Mode Set sequence

Display On Status

↓

< Gamma Brightness >

R93h - 01h
R60h - xxh
R61h - xxh
R62h - xxh
~
R73h - xxh
R74h - xxh
R93h - 00h

※ Gamma Brightness : Gamma Condition Setting Value per Each brightness

↓

Display On Status

SAMSUNG Mobile Display CO., LTD.(All Rights Reserved).

One step solution for LCD / PDP / OLED panel application: Datasheet, inventory and accessory! www.panelook.com

Global LCD Panel Exchange Center www.panelook.com 屏库:全球液晶屏交易中心

9-9. Gamma Condition Setting Value per Each brightness

- Gamma Table (Gamma γ = 2.2)

Command	Parameter							Description
	330cd/m²	300cd/m²	270cd/m²	240cd/m²	210cd/m²	180cd/m²	150cd/m²	
R93h	01h							Gamma set update disable
R60h	00h	00h	00h	00h	00h	00h	00h	Red V1 Gamma
R61h	A8h	A7h	A9h	ACh	AEh	ADh	ADh	Red V15 Gamma
R62h	C4h	C4h	C6h	C5h	C6h	C8h	C9h	Red V35 Gamma
R63h	DBh	DCh	DCh	DDh	DEh	DEh	DFh	Red V59 Gamma
R64h	BCh	BEh	C0h	C1h	C2h	C6h	C6h	Red V87 Gamma
R65h	C7h	C7h	C9h	CBh	CDh	CDh	D2h	Red V171 Gamma
R66h	6Fh	68h	61h	58h	50h	47h	3Ch	Red V255 Gamma
R67h	00h	00h	00h	00h	00h	00h	00h	Green V1 Gamma
R68h	9Ah	97h	99h	9Bh	99h	99h	9Ah	Green V15 Gamma
R69h	C1h	C2h	C3h	C2h	C4h	C6h	C6h	Green V35 Gamma
R6Ah	DBh	DBh	DBh	DCh	DCh	DCh	DEh	Green V59 Gamma
R6Bh	B9h	BCh	BEh	BFh	C0h	C5h	C4h	Green V87 Gamma
R6Ch	C7h	C6h	C8h	CAh	CDh	CCh	D1h	Green V171 Gamma
R6Dh	6Eh	67h	60h	57h	4Eh	45h	3Ah	Green V255 Gamma
R6Eh	00h	00h	00h	00h	00h	00h	00h	Blue V1 Gamma
R6Fh	8Ch	8Ch	8Ch	8Dh	8Dh	8Dh	8Fh	Blue V15 Gamma
R70h	BDh	BDh	BEh	BEh	BFh	C1h	C1h	Blue V35 Gamma
R71h	D8h	D9h	D9h	DAh	DAh	DAh	DBh	Blue V59 Gamma
R72h	B2h	B5h	B6h	B7h	B9h	BDh	BDh	Blue V87 Gamma
R73h	C3h	C3h	C5h	C7h	C9h	C9h	CEh	Blue V171 Gamma
R74h	A7h	9Eh	96h	8Bh	81h	76h	69h	Blue V255 Gamma
R93h	00h							Gamma set update Enable

- **Gamma** = 2.2 (Reference Luminance : 300cd/m2 , Color Coordinate **: X = 0.293, Y =0.305)**

Luminance	300
Gamma Control Point	Ideal Value
V1	0.00
V15	0.59
V35	3.80
V59	11.98
V87	28.16
V171	124.54
V255	300.00

One step solution for LCD / PDP / OLED panel application: Datasheet, inventory and accessory! www.panelook.com

Global LCD Panel Exchange Center www.panelook.com 屏库:全球液晶屏交易中心

9-10 Driver IC register Map (Driver IC default value)

Group	Command	Hex Code	W/R	DB7	DB6	DB5	DB4	DB3	DB2	DB1	DB0	description
Display on/off	Sleep mode	00h	W/R	X	X	X	X	X	X	X	SLP	Sleep mode control. "1":enter sleep mode
				0	0	0	0	0	0	0	1	"0":exit sleep mode
Soft reset	Soft reset	01h	W	X	X	X	X	X	X	X	S_RST	Soft Reset signal
				0	0	0	0	0	0	0	1	
	Data Handling	02h	W/R	X	X	X	X	X	X	X	REV	CL : 8-color mode
				0	0	0	0	0	0	0	0	REV : Data inversion
	Data Handling	03h	W/R	X	X	X	X	X	X	X	DISP_ON	Display data output control.
				0	0	0	0	0	0	0	0	"0":Black output "1":Normal display
IC	IC position	04h	W/R	X	X	X	X	X	X	DPSC[1:0]		IC position. 00:bottom 01:right, dis-continue
				0	0	0	0	0	0	10		10:right,continue
Power on seq		05h	W/R	X	HV_GND	PWR_OPT	VMOS_SEL	ADOF	APOF	ADON	APON	power and display on/off control
				0	0	1	0	1	1	1	1	
		06h	W/R	X	X	X	X	X	VL3_ON	VL2_ON	VL1_ON	VLOUT1/2/3 on/off control
				0	0	0	0	0	0	0	0	
		07h	W/R	AMP_ON	VMOS_ON	VINT_ON	VGL_ON	VGH_ON	VREG_ON	VCI1_ON	VREF_ON	Power regulator on/off control
				0	0	0	0	0	0	0	0	
		08h	W/R	X	X	X	X	SEN_ON	GLS_ON	ELS_ON	EL_ON	display on / off control
				0	0	0	0	0	0	0	0	
		09h	W/R	X	X	X	X	X	X	X	EL_DIS_ON	ELVDD discharge function control
				0	0	0	0	0	0	0	0	
		0Ah	W/R	X	DC1[2:0]			X	DC2[2:0]			CP boosting freq. control
				0	011			0	011			
		0Bh	W/R	X	X	X	X	X	X	X	BT	VLOUT2/VLOUT3 Target voltage selection
				0	0	0	0	0	0	0	1	
		0Ch	W/R	X	LA2	LA1	LA0	CA3	CA2	CA1	CA0	Slew rate control for channel / link amp
				0	1	0	0	0	0	1	0	
		0Eh	W/R	X	X	X	X	X	X	X	VREFEX	external VREF O on/off control
				0	0	0	0	0	0	0	0	
		0Fh	W/R	X	X	X	X	X	VC[2:0]			VCI1 regulator output control
				0	0	0	0	0	011			
		10h	W/R	X	VMOS[2:0]			X	VR[2:0]			VMOS/VREGOUT regulator output contyrol
				0	010			0	100			
		11h	W/R	X	VGH[2:0]			X	VGL[2:0]			VGH / VGL regulator voltage level control
				0	011			0	101			
		12h	W/R	X	X	X	X	X	VINT[2:0]			VINT output control
				0	0	0	0	0	011			
Demux control	SDC	13h	W/R	X	X	X	SEL_T	X	X	X	SDC	SEL_T : 3:1 or 4:1 mux select. "0":4:1,
				0	0	0	0	0	0	0	0	"1":3:1
Color depth	Color depth	14h	W/R	X	X	X	X	X	X	CM[1:0]		00:24bit, 01:18bit, 10,16bit mode
				0	0	0	0	0	0			
YUV to RGB	YUV to RGB	15h	W/R	X	X	YUV_SEL		X	X	YUV_CSC[1:0]		YUV_SEL : YUV_SELRGB or YUV 8/16bit transfer mode select
				0	0	00		0	0	00		YUV CSC : YUVtoRGB change methode
Panel select	Gate Timing	16h	W/R	X	X	X	SS	X	GTCON[2:0]			SS : Source scan direction
				0	0	0	0	0	000			GTCON[1] "0":NON ACL panel, "1":ACL
RGB input	Mode select	17h	W/R	X	X	X	X	X	X	X	MOD_SEL	Enable signal active or disable select
				0	0	0	0	0	0	0	0	
	Signal polarity	18h	W/R	X	X	X	X	DSPL	HSPL	VSPL	EPL	Input signal polarity select
				0	0	0	0					
	Panel_size_X	19h	W/R	X	X	X	X	X	X	DATA[9:8]		Panel column size (default : 356h (854d))
				0	0	0	0	0	0	1	1	
		1Ah	W/R	DATA[7:0]								
				56h								
	Panel_size_Y	1Bh	W/R	X	X	X	X	X	X	SCAN[9:8]		Panel row size (default : 1E0h (480d))
				0	0	0	0	0	0	0	1	
		1Ch	W/R	SCAN[7:0]								
				E0h								
	VBP	1Dh	W/R	VBP[7:0]								Vertical back porch
				0Ah								
	VFP	1Eh	W/R	VFP[7:0]								Vertical front porch
				0Ah								
	HBP	1Fh	W/R	HBP[7:0]								Horizontal back porch
				14h								
	HFP	20h	W/R	HFP[7:0]								Horizontal front porch
				14h								
Output data DA	DA_RGB	21h	W/R	X	X	X	X	X	ALL_R	ALL_G	ALL_B	Source data output control (Direct Access)
				0	0	0	0	0	0	0	0	
	DA_R	22h	W/R	DA_R[7:0]								DA Red data
				00h								
	DA_G	23h	W/R	DA_G[7:0]								DA Green data
				00h								
	DA_B	24h	W/R	DA_B[7:0]								DA Blue data
				00h								

SAMSUNG Mobile Display CO., LTD.(All Rights Reserved).

One step solution for LCD / PDP / OLED panel application: Datasheet, inventory and accessory! www.panelook.com

Global LCD Panel Exchange Center www.panelook.com 屏库:全球液晶屏交易中心

ACL3	ACL3 CONTROL	43h	W/R	X	X	AWINOUT	AWON	X	X	X	ACLON				
				0	0	0	0	0	0	0	0				
		44h	W/R	X	X	X	X	X	ACCU[2:0]						
				0	0	0	0	0	000						
		45h	W/R	AKR[7:0]								RGB to YUV transfer factor			
				4Dh											
		46h	W/R	AKG[7:0]								RGB to YUV transfer factor			
				96h											
		47h	W/R	AKB[7:0]								RGB to YUV transfer factor			
				1Dh											
	ACL PROFILE	48h	W/R	X	X	X	X	X	X	AHSP[9:8]		ACL window Horizontal Start Point			
				0	0	0	0	0	0	0	0				
		49h	W/R	AHSP[7:0]											
				00h											
		4Ah	W/R	X	X	X	X	X	X	AHEP[9:8]		ACL window Horizontal End Point			
				0	0	0	0	0	0	1	1				
		4Bh	W/R	AHEP[7:0]											
				60h											
		4Ch	W/R	X	X	X	X	X	X	AVSP[9:8]		ACL window Vertical Start Point			
				0	0	0	0	0	0	0	0				
		4Dh	W/R	AVSP[7:0]											
				00h											
		4Eh	W/R	X	X	X	X	X	X	AVEP[9:8]		ACL window Vertical End Point			
				0	0	0	0	0	0	0	1				
		4Fh	W/R	AVEP[7:0]											
				E0h											
		50h	W/R	DY0[7:0]											
				05h											
		51h	W/R	DY1[7:0]											
				05h											
		52h	W/R	DY2[7:0]											
				05h											
		53h	W/R	DY3[7:0]											
				05h											
		54h	W/R	DY4[7:0]											
				05h											
		55h	W/R	DY5[7:0]											
				05h											
		56h	W/R	DY6[7:0]											
				05h											
		57h	W/R	DY7[7:0]											
				05h											
		58h	W/R	DY8[7:0]											
				05h											
		59h	W/R	DY9[7:0]											
				05h											
		5Ah	W/R	DY10[7:0]											
				05h											
		5Bh	W/R	DY11[7:0]											
				05h											
		5Ch	W/R	DY12[7:0]											
				05h											
		5Dh	W/R	DY13[7:0]											
				05h											
		5Eh	W/R	DY14[7:0]											
				05h											
		5Fh	W/R	DY15[7:0]											
				05h											

SAMSUNG Mobile Display CO., LTD.(All Rights Reserved).

One step solution for LCD / PDP / OLED panel application: Datasheet, inventory and accessory! www.panelook.com

Global LCD Panel Exchange Center www.panelook.com 屏库:全球液晶屏交易中心

Gamma Table		60h	W/R	GAM_N_R_V1[7:0]	Normal Gamma Red V1
		61h	W/R	GAM_N_R_V15[7:0]	Normal Gamma Red V15
		62h	W/R	GAM_N_R_V35[7:0]	Normal Gamma Red V35
		63h	W/R	GAM_N_R_V59[7:0]	Normal Gamma Red V59
		64h	W/R	GAM_N_R_V87[7:0]	Normal Gamma Red V87
		65h	W/R	GAM_N_R_V171[7:0]	Normal Gamma Red V171
		66h	W/R	GAM_N_R_V255[7:0]	Normal Gamma Red V255
		67h	W/R	GAM_N_G_V1[7:0]	Normal Gamma Green V1
		68h	W/R	GAM_N_G_V15[7:0]	Normal Gamma Green V15
		69h	W/R	GAM_N_G_V35[7:0]	Normal Gamma Green V35
		6Ah	W/R	GAM_N_G_V59[7:0]	Normal Gamma Green V59
		6Bh	W/R	GAM_N_G_V87[7:0]	Normal Gamma Green V87
		6Ch	W/R	GAM_N_G_V171[7:0]	Normal Gamma Green V171
		6Dh	W/R	GAM_N_G_V255[7:0]	Normal Gamma Green V255
		6Eh	W/R	GAM_N_B_V1[7:0]	Normal Gamma Blue V1
		6Fh	W/R	GAM_N_B_V15[7:0]	Normal Gamma Blue V15
		70h	W/R	GAM_N_B_V35[7:0]	Normal Gamma Blue V35
		71h	W/R	GAM_N_B_V59[7:0]	Normal Gamma Blue V59
		72h	W/R	GAM_N_B_V87[7:0]	Normal Gamma Blue V87
		73h	W/R	GAM_N_B_V171[7:0]	Normal Gamma Blue V171
		74h	W/R	GAM_N_B_V255[7:0]	Normal Gamma Blue V255

SAMSUNG Mobile Display CO., LTD.(All Rights Reserved).

One step solution for LCD / PDP / OLED panel application: Datasheet, inventory and accessory! www.panelook.com

Global LCD Panel Exchange Center www.panelook.com 屏库:全球液晶屏交易中心

amma Tab		75h	W/R	GAM_D_N_R_V1[7:0]												Dark Gamma Red V1
		76h	W/R	GAM_D_N_R_V15[7:0]												Dark Gamma Red V15
		77h	W/R	GAM_D_N_R_V35[7:0]												Dark Gamma Red V35
		78h	W/R	GAM_D_N_R_V59[7:0]												Dark Gamma Red V59
		79h	W/R	GAM_D_N_R_V87[7:0]												Dark Gamma Red V87
		7Ah	W/R	GAM_D_N_R_V171[7:0]												Dark Gamma Red V171
		7Bh	W/R	GAM_D_R_V255[7:0]												Dark Gamma Red V255
		7Ch	W/R	GAM_D_G_V1[7:0]												Dark Gamma Green V1
		7Dh	W/R	GAM_D_G_V15[7:0]												Dark Gamma Green V15
		7Eh	W/R	GAM_D_G_V35[7:0]												Dark Gamma Green V35
		7Fh	W/R	GAM_D_G_V59[7:0]												Dark Gamma Green V59
		80h	W/R	GAM_D_G_V87[7:0]												Dark Gamma Green V87
		81h	W/R	GAM_D_G_V171[7:0]												Dark Gamma Green V171
		82h	W/R	GAM_D_G_V255[7:0]												Dark Gamma Green V255
		83h	W/R	GAM_D_B_V1[7:0]												Dark Gamma Blue V1
		84h	W/R	GAM_D_B_V15[7:0]												Dark Gamma Blue V15
		85h	W/R	GAM_D_B_V35[7:0]												Dark Gamma Blue V35
		86h	W/R	GAM_D_B_V59[7:0]												Dark Gamma Blue V59
		87h	W/R	GAM_D_B_V87[7:0]												Dark Gamma Blue V87
		88h	W/R	GAM_D_B_V171[7:0]												Dark Gamma Blue V171
		89h	W/R	GAM_D_B_V255[7:0]												Dark Gamma Blue V255
OTP		8Ah	W/R	X	X	X	X	X	OTP_IBIT[2:0]							
				0	0	0	0	0	000							
		8Bh	W/R	X	OWBW[1:0]		ATRD	X	X	OTP_RD	OTP_WR					OTP control signal bit
				0	00		0	0	0	0	0					
		8Ch	W/R	X	X	OTP_ADR										OTP read/write address
				0	0	00000										
		8Dh	W/R	OTP_WDATA[7:0]												OTP write data
				8'h00												
		8Eh	R	X	X	X	X	X	X	X	TP_R_hed					OTP read header bit store
				0	0	0	0	0	0	0						
		8Fh	R	OTP_RDATA[7:0]												OTP read data store
				8'h00												
SPI read	SPI read option	90h	W/R	X	X	X	X	X	X	X	SPI_read					SPI read option ("0":write, "1":read)
				0	0	0	0	0	0	0	0					
gamma select		91h	W/R	X	X	X	X	X	X	X	MTP_SEL					Gamma offset value select. "1":normal brightness OTP, "0":dark brightness OTP
				0	0	0	0	0	0	0	1					
GAM REG/OTP sele		92h	W/R	X	X	X	X	X	X	X	AM_REG_C					Gamma offset OTP/REG value select. "0":register value, "1":OTP value
				0	0	0	0	0	0	0	1					
Reg select	Register bank select	FFh'	W/R	X	X	X	X	X	X	REG_BANK						Register bank select ("00":default bank (open), "01":pentile, "10":OTP trimming, "11":Hidden reg)
				0	0	0	0	0	0	00						

SAMSUNG Mobile Display CO., LTD.(All Rights Reserved).

One step solution for LCD / PDP / OLED panel application: Datasheet, inventory and accessory! www.panelook.com

Global LCD Panel Exchange Center www.panelook.com 屏库:全球液晶屏交易中心

9-11. Panel Scan Direction Control (Display Up/Down/Left/Right Flip Function)

Inst/Para	Direction	INDEX	D7	D6	D5	D4	D3	D2	D1	D0	Initial value
Parameter	H ↔ D	FFh	X	X	X	X	X	X	REG_BANK[1:0]		00h

REG_BANK[1:0] : This command specify register group to use it

INDEX	REG_BANK[1:0]	Selected register map	Remark
0	00	Open command	default
1	01	Pentile command	
2	10	OTP trmming command	
3	11	IC hidden command	

Inst/Para	Direction	INDEX	D7	D6	D5	D4	D3	D2	D1	D0	Initial value
Parameter	H ↔ D	16h	X	X	X	SS	X	GT_CON[2:0]			00h

GT_CON[2:0] : This command control LTPS timing
GT_CON[0] : scan driver control
GT_CON[0]= 0 → forward scanning
GT_CON[0]= 1 → backward scanning

SS : This command control image mirroring function against X direction

Inst/Para	Direction	INDEX	D7	D6	D5	D4	D3	D2	D1	D0	Initial value
Parameter	H ↔ D	02h	–	–	–		SID[1:0]		–		C0h

SID[1:0] : This bit define the supported pentile filters for red and blue sub-pixel

'00' → scanning upper left to lower right, default
'01' → scanning upper right to lower left
'10' → scanning lower left to upper right
'11' → scanning lower right to upper left

SAMSUNG Mobile Display CO., LTD.(All Rights Reserved).

One step solution for LCD / PDP / OLED panel application: Datasheet, inventory and accessory! www.panelook.com

Global LCD Panel Exchange Center www.panelook.com 屏库:全球液晶屏交易中心

	image	Register setting	Remarks
Original	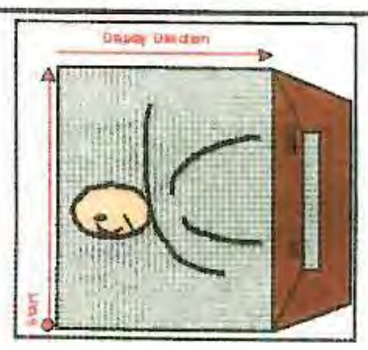	Default	
H-Flip	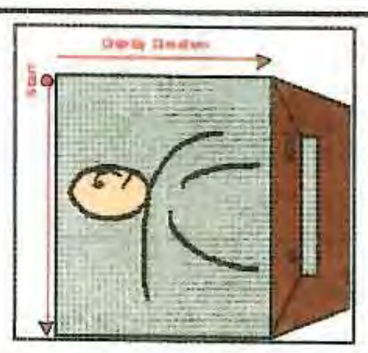	FFh-00h open command 16h-10h FFh-01h pentile command 02h-C4h	SS =[1] GTCON[0] =[0] SID[1:0]=[01]
V-Flip	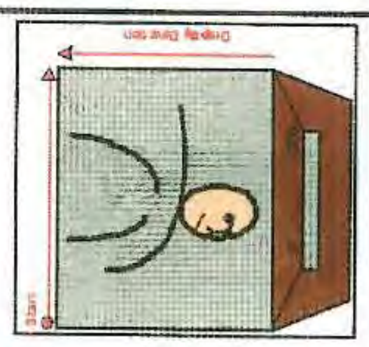	FFh-00h 16h-01h FFh-01h 02h-C8h	SS =[0] GTCON[0] =[1] SID[1:0]=[10]
H/V - Flip	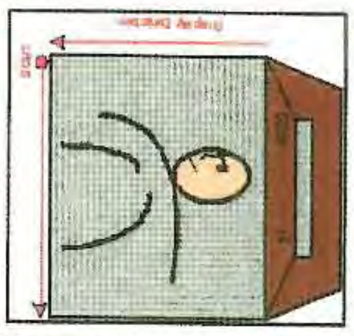	FFh-00h 16h-11h FFh-01h 02h-CCh	SS =[1] GTCON[0] =[1] SID[1:0]=[11]

SAMSUNG Mobile Display CO., LTD.(All Rights Reserved).

One step solution for LCD / PDP / OLED panel application: Datasheet, inventory and accessory! www.panelook.com

Global LCD Panel Exchange Center www.panelook.com 屏库:全球液晶屏交易中心

9-12. Power Save Mode (Sleep Mode Control)

Inst/Para	Direction	INDEX	D7	D6	D5	D4	D3	D2	D1	D0	Initial value
Parameter	H ↔ D	00h	0	0	0	0	X	X	X	SLP	01h

SLP : This command control sleep in / sleep out control
The MSB 4bits(D7~D4) should be set by 1010 for soft ESD protection during command write operation

SLP='0' → sleep out state
SLP='1' → sleep in state (default)

(1) APON=1, APOF=1 (auto power on , auto power off)

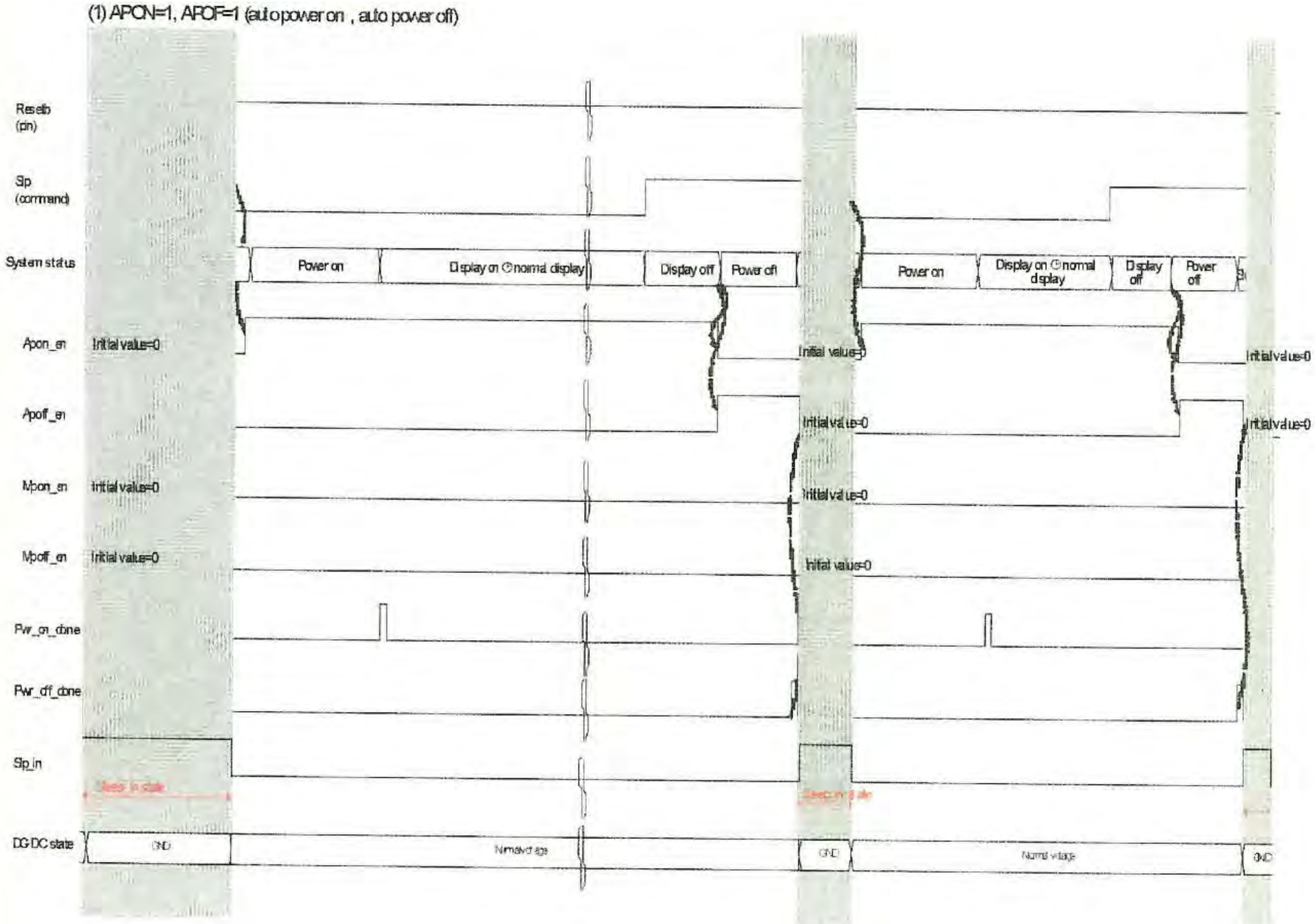

One step solution for LCD / PDP / OLED panel application: Datasheet, inventory and accessory! www.panelook.com

Global LCD Panel Exchange Center www.panelook.com 屏库:全球液晶屏交易中心

10. Quality Level

10-1. Environment Condition

The environmental conditions for inspection shall be as follows.

① Temperature & Humidity
Room temperature : 22 ± 3℃
Humidity : 65 ± 20%RH

② Viewing distance : 30 ± 5cm
Viewing angle(tolerance) : 90° ± 30°

③ Ambient light
Display visual inspection : 150±50 lux
Cosmetic inspection : 1000~1500 lux

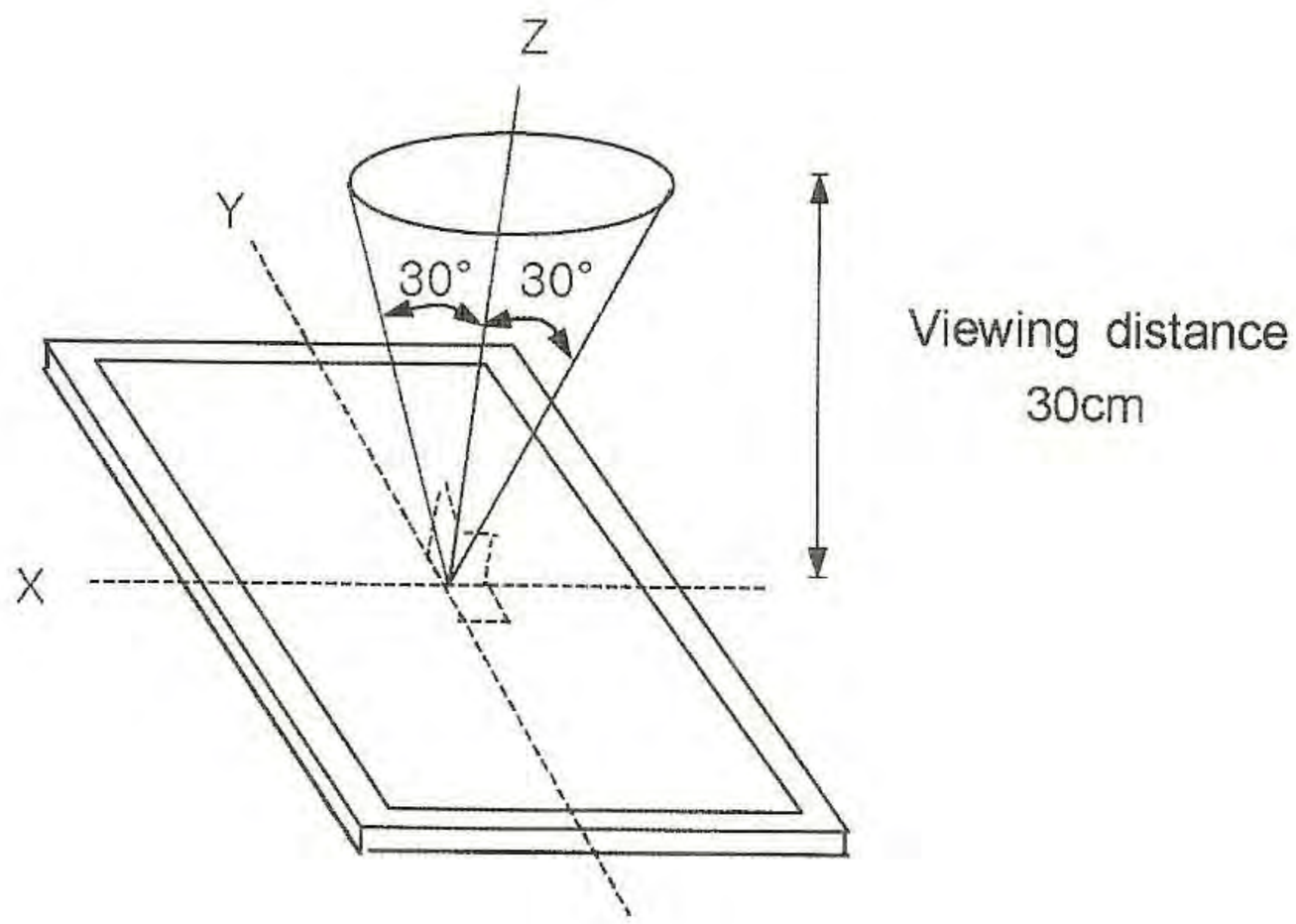

SAMSUNG Mobile Display CO., LTD.(All Rights Reserved).

One step solution for LCD / PDP / OLED panel application: Datasheet, inventory and accessory! www.panelook.com

Global LCD Panel Exchange Center www.panelook.com 屏库:全球液晶屏交易中心

10-2. Sampling Procedures for each item's acceptance table

Defect type	Sampling Procedures	AQL
Major Defect	MIL-STD-105D Inspection level Ⅰ normal inspection single sample inspection	0.65
Minor Defect	MIL-STD-105D Inspection level Ⅰ normal inspection single sample inspection	1.5

① Major defect

: A major defect refers to a defect which may substantially degrade usability for product applications.

② Minor defect

: A minor defects refers to a defect which is not considered to substantially degrade product application,or a defect which deviates from existing standards almost unrelated to the effective use of the product or its operation.

③ Display visual defect application zone : Viewing Area

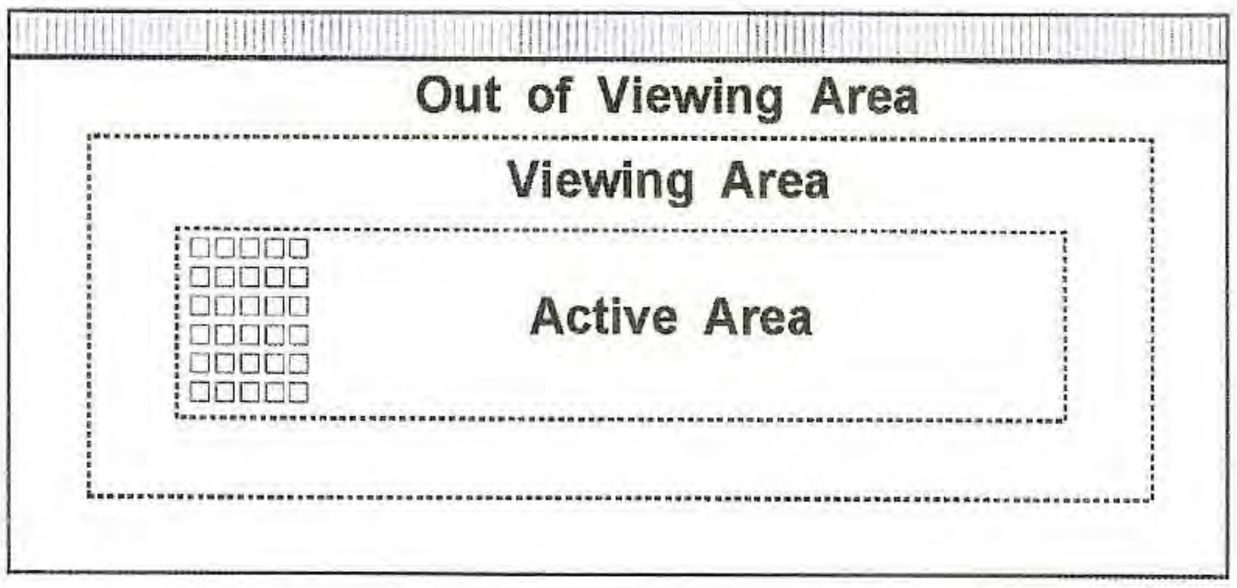

- Display visual defect in "Out of View Area" Zone should not be judged.

SAMSUNG Mobile Display CO., LTD.(All Rights Reserved).

One step solution for LCD / PDP / OLED panel application: Datasheet, inventory and accessory! www.panelook.com

Global LCD Panel Exchange Center www.panelook.com 屏库:全球液晶屏交易中心

10-3. inspection Item

No.	Item	Criterion for Defects	Defect Type
1	Non Display	Disallowance	Major
2	Irregular operating	Disallowance	Major
3	Line defect	Disallowance (Vertical line/ Horizontal line / Periodical line)	Major
4	Dark Dot	Distance(mm): 5 ≤ D; Acceptable number: Dark 2, Bright 0 ※ Criterion : 1 sub Pixel(42.3x84.5um)	Minor
5	Polarizer dent 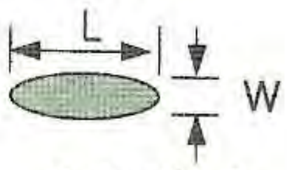 Ø=(L+W)/2	Size Ø (mm): Acceptable number Ø ≤ 0.15: Ignore 0.15 < Ø ≤ 0.2: 2 0.2 < Ø: 0	Minor
6	Scratch on Polarizer (Line shape) 	Width (㎜) / Length (㎜) / Acceptable number W≤0.02: Ignore / Ignore 0.02≤W≤0.03: L≤1.0: Ignore; 1.0< L≤2.5: 1; 2.5< L: 0 0.03≤W≤0.05: L≤ 0.3: Ignore; 0.3< L≤1.0: 1; 1.0< L: 0 0.05 < W: 0 / 0	Minor
7	Foreign Material 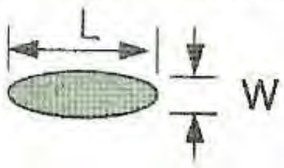 Ø=(L+W)/2	Size Ø (mm): Acceptable number Ø ≤ 0.15: Ignore 0.15 < Ø ≤ 0.2: 2 0.2 < Ø: 0	Minor
8	Surface Stain	Stain which can not clean on the front and rear of display surface by using soft cloth and wiping gently. Clean by using soft cloth and wiping gently if Stain remained on the front and rear of display surface.	Minor
9	Tuffy	Apply under the Driver IC and inside of the front glass at front side. Apply under the rear glass and inside of the FPCB at rear side.	Minor
10	Polarizer	Attach inside of the front display.	Minor
11	FPC	The distance of the align-key pad between FPCB and Panel stacked less than 100um.	Minor

SAMSUNG Mobile Display CO., LTD.(All Rights Reserved).

One step solution for LCD / PDP / OLED panel application: Datasheet, inventory and accessory! www.panelook.com

Global LCD Panel Exchange Center www.panelook.com 屏库:全球液晶屏交易中心

■ Cosmetic defect

No.	Item	Criterion for Defects			Defect Type
1	FPCB	(1) Open Area : Disallowed if Cu layer exposed. (2) Solder mask Area : Disallowed if Cu layer exposed. (3) Pattern Area : Disallowed if Cu layer exposed.			Minor
2	Glass chipping	⑤,⑥ Coner	Side		Major (Note 1)
		X≤1.5: OK Y≤1.5: OK Z≤0.3: OK	X≤5.0: OK Y≤0.5: OK Z≤0.3: OK		
3	Glass crack	None			Major (Note 1)
4	FPC particle	Size D (mm)		Quantity (ea)	Minor
		Inner layer Particle	D ≤ 5	Disregard	
			D > 5	0	
			allowed if there is not effect to pattern		
		Printing particle	D ≤ 5	Disregard	
			D > 5	0	
5	FPC stain	BODY parts	D ≤ 1.0mm	Disregard	Minor
		Pattern parts (It is include gold plating part of FOG bonding parts and GND) - Stain, discoloration by difference of gloss and brightness → normal - Color difference of plating and stain (wave shape)→ normal			
6	Scratch on FPC Dent on FPC	- Coveray / PSR area : No relation to size à Disallowance " V " shape Disallowed if Cu layer expose - GND area : Disallowed if Cu layer expose - Soldering area : Disallowed if Cu layer expose			Minor
7	FPC Bubble	Disallowance			Minor

Note1)

[Side]

[⑤,⑥ corner]

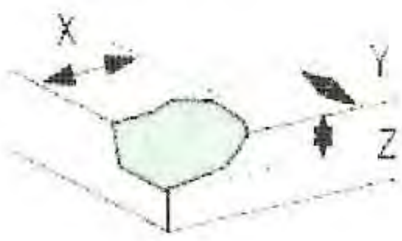

[Crack]

[Corner definition]

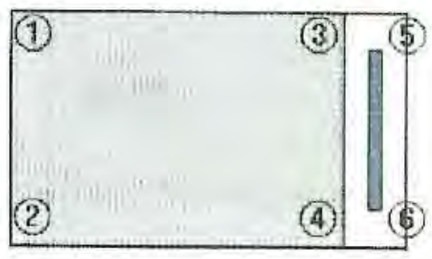

※Disallowance of any glass chipping at the cell seal area of the ①~④ corner.

Note2)
FPCのシミムラによる不具合指摘があれば、その都度、対応を協議し、必要であれば仕様策定および限度見本を作成する

SAMSUNG Mobile Display CO., LTD.(All Rights Reserved).

One step solution for LCD / PDP / OLED panel application: Datasheet, inventory and accessory! www.panelook.com

Global LCD Panel Exchange Center www.panelook.com 屏库:全球液晶屏交易中心

11. Reliability

11-1. Test item

: All test result of items should be judged in 2 hours recovery time at room temperature.

No	Item	Condition	Qty.	Judgment Criterion
1	High Temperature Operation	70℃ 240hours	6	- After testing, Cosmetic defects should not happen. - After testing, the defective of brightness should be less than 40% of the initial value. - After testing, total current consumption should be in the range of initial Spec. - After testing, color coordinate value should be in the range of initial Spec.
2	High Temperature Storage	70℃ 240hours	6	
3	Low Temperature Operation	-10℃ 240hours	6	
4	Low Temperature Storage	-30℃ 240hours	6	
5	High Humidity Operation	40℃ 95%RH 240hours	6	
6	High Humidity Storage	60℃ 90%RH 240hours	6	
7	Temperature Cycle	-30/80℃ 30 minute 50Cycle	6	-In case of malfunction defect caused by ESD damage,if it would be recovered to normal state after resetting, it would be judged as a good part.
8	ESD (Contact)	± 6kV, 150pF/330Ω, Center, 2 times (Non-operation)	3	
9	ESD (Air)	± 8kV, 150pF/330Ω, Center, 2 times (Non-operation)	3	
10	HBM	100pF, 2kΩ, 20~25℃, RH60%, ±2kV	3	
11	MM	MM: 200pF, 0Ω, 20~25℃, RH60%, ±200V	3	
12	Vibration Test (Packing)	Random, 1.047Grms, 6~200Hz Z:60min, X,Y each 30min	32	- After testing,cosmetic and electrical defects should not happen
13	Static Push	2mm/min, 10pi, 30N	5	3回/月

SAMSUNG Mobile Display CO., LTD.(All Rights Reserved).

One step solution for LCD / PDP / OLED panel application: Datasheet, inventory and accessory! www.panelook.com

Global LCD Panel Exchange Center www.panelook.com 屏库:全球液晶屏交易中心

12. Handling Precautions

12-1. Mounting Method

The AMOLED of SAMSUNG Mobile Display CO.,LTD. module consists of two slim glasses with polarizer which can easily get damaged. Since the module is constructed as to be fixed by utilizing fitting holes in the printed circuit board. Extreme care should be used when handling the AMOLED modules.

12-2. Caution of AMOLED Handling and Cleaning

When cleaning the display surface, use soft cloth solvent as recommended below and wipe gently.

◎ Isopropyl alcohol
◎ Ethyl alcohol
◎ Trichlorotriflorothane

Do not wipe the display surface with dry or hard materials that will damage the polarizer surface. Do not use the following solvent.

◎ Water
◎ Ketone
◎ Aromatics

Do not wipe ITO pad area with the dry or hard materials that will damage the ITO patterns. Do not use the following solvent on the pad and prevent it from being contaminated.

◎ HCFC
◎ Soldering flux
◎ Chlorine(Cl), Sulfur(S)
◎ Spittle, Fingerprint

If the product is not wrapped with a desiccant added pad, ITO pattern can be damaged by corrosion. SAMSUNG Mobile Display CO,.LTD. suggests wrapping a product with a desiccant unless customers particularly indicate that they do not want it. In case ITO pattern corrodes due to the usage of chlorine, sulfur or customer's mishandling of the product, the responsibility lies with the customer.

12-3. Caution Against Static Charge

For AMOLED module, use C-MOS LSI drivers, therefore we recommend that you ;
Connect any unused input terminal to VDD or VSS, do not input any signals before power is turned on, and ground your body, work/assembly areas, assembly equipment to protect against static electricity. It could occur static electricity when taping off the film which protects AMOLED.
Against static charge, you should make sure that the product is safe or not by experiment in advance.

SAMSUNG Mobile Display CO., LTD.(All Rights Reserved).

One step solution for LCD / PDP / OLED panel application: Datasheet, inventory and accessory! www.panelook.com

Global LCD Panel Exchange Center www.panelook.com 屏库:全球液晶屏交易中心

12-4. Packing

◎ The packing principle is that AMOLED module should keep its packing condition at the time of delivery. When storing the AMOLED after unpacking, note the followings.

◎ AMOLED module is consisted of GLASS and assemblies. It should avoid pressure, strong impact, and being dropped from a height.

◎ To prevent modules from degradation, do not operate or store them in a place where they are directly exposed to sunlight or high temperature/humidity.

12-5. Caution for Operation

◎ If you do not follow normal POWER ON , OFF sequence or abnormal operating, then AMOLED module can be damaged Electro-optically and does not recover.

◎ Response time may extremely delay at a temperature lower than operating range, AMOLED does not normally operate at a high temperature. But this may recover at a proper temperature.

◎ When you set optimal operating voltage to AMOLED module, you can see the optimal contrast of AMOLED. So, add voltage controllable function at SET Module.

◎ AMOLED module may not display normally when twisting power or pressing power is added. Therefore you should secure AMOLED module maximum thickness at set assembly not to have any pressure affect AMOLED module.

◎ Electro-chemical reaction may occur when there is humidity on pad, therefore, you should use AMOLED Module below maximum operating humidity.

◎ AMOLED Module Power Vdd should be designed to protect surge current at SET Module.

◎ You should not damage connector and cable for AMOLED module assembly by force folding or by applying extreme power.

◎ AMOLED may not display normally when it is interfered by surrounding elements, therefore you should consider setting design not to damage AMOLED module by surrounding elements.

◎ To satisfy EMI standards, you should plan your design after considering emitting energy.

◎ We can not guarantee display characteristics outside viewing area, therefore your set window should be fixed into viewing area.

◎ Image-sticking may occur if AMOLED displays same image for a long time, so you need to make a pattern change for AMOLED.

12-6. Storage

◎ Place in a dark place where neither exposure to direct sunlight or any fluorescent light is permitted and keep at room temperature & room humidity.

◎ Store with no contact with polarizer surface.

[It is recommended to store them as they have been contained in the inner container when we delivered them.

SAMSUNG Mobile Display CO., LTD.(All Rights Reserved).

One step solution for LCD / PDP / OLED panel application: Datasheet, inventory and accessory! www.panelook.com

Global LCD Panel Exchange Center www.panelook.com 屏库:全球液晶屏交易中心

12-7. Safety Precautions

◎ Disassembly or modification may cause electric shock, damages to sensitive part inside of the AMOLED module, dust adhesion, or scratches on the display part.

◎ In the event that the contents of AMOLED module are on skin, wipe them with a paper towel or gauge and wash the part well, and receive medical attention if necessary.

◎ Do not use the AMOLED module for the Special purpose besides display units.

◎ Be careful of the glass chips that may cause injury to fingers of skin, when the display part is broken.

12-8. Precautions before Use

You should discuss the following case with SAMSUNG Mobile Dsiplay CO.,LTD.

◎ in case of any questions about contents of this "Specification For Approval".

◎ in case of occurring new problems not mentioned at this "Specification For Approval".

◎ in case of your request about income inspection Specification change.

◎ in case of occurring new problem at your driving test.

※ If SMD has to change the conditions Specified in the Specification, previously the negotiation shall be held and decided.

※ SMD do not use the material specified in the SS-00259-1.

※ SMD use the material that certified by the Green-partner.

SAMSUNG Mobile Display CO., LTD.(All Rights Reserved).

One step solution for LCD / PDP / OLED panel application: Datasheet, inventory and accessory! www.panelook.com

Global LCD Panel Exchange Center www.panelook.com 屏库:全球液晶屏交易中心

13. Drawing

13-1. Product Drawing

13-2. Packing Drawing

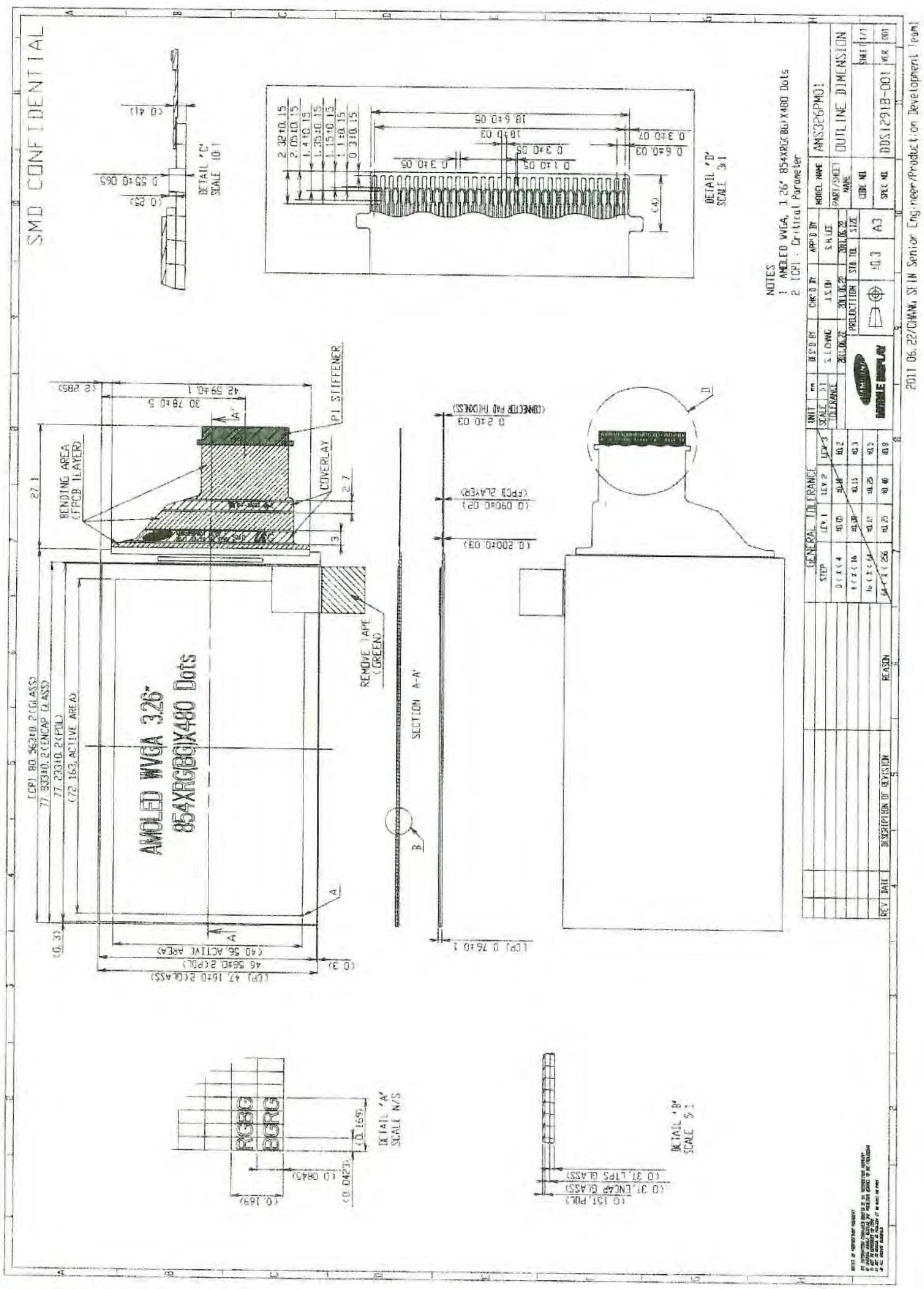

SAMSUNG Mobile Display CO., LTD.(All Rights Reserved).

One step solution for LCD / PDP / OLED panel application: Datasheet, inventory and accessory! www.panelook.com

Global LCD Panel Exchange Center www.panelook.com 屏库:全球液晶屏交易中心

13-2-1. Box Pack

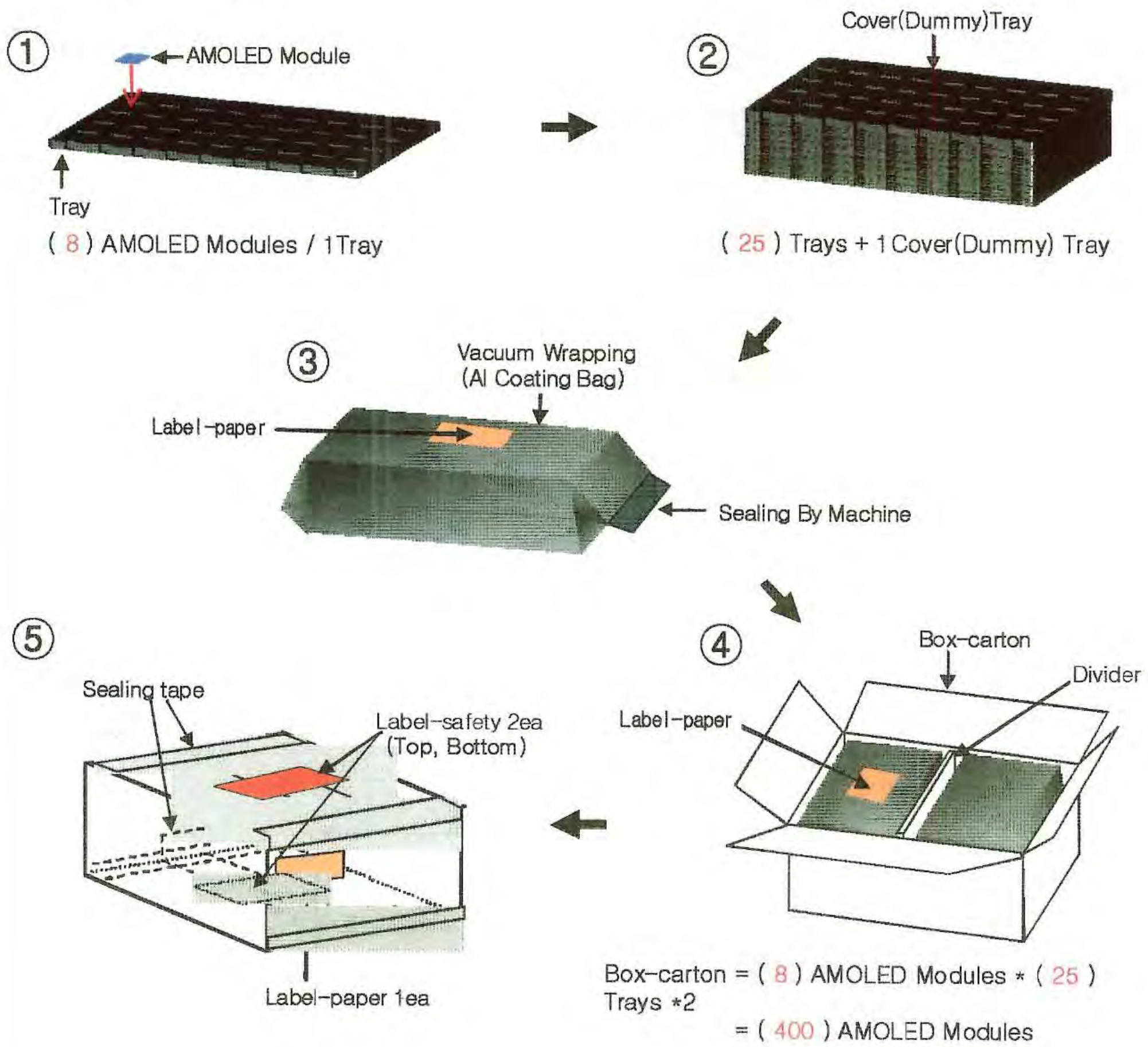

(2) Size : 583(L) x 388(W) x 210(H)

SAMSUNG Mobile Display CO., LTD.(All Rights Reserved).

One step solution for LCD / PDP / OLED panel application: Datasheet, inventory and accessory! www.panelook.com

Global LCD Panel Exchange Center www.panelook.com 屏库:全球液晶屏交易中心

13-2-2. Label

* Label-paper

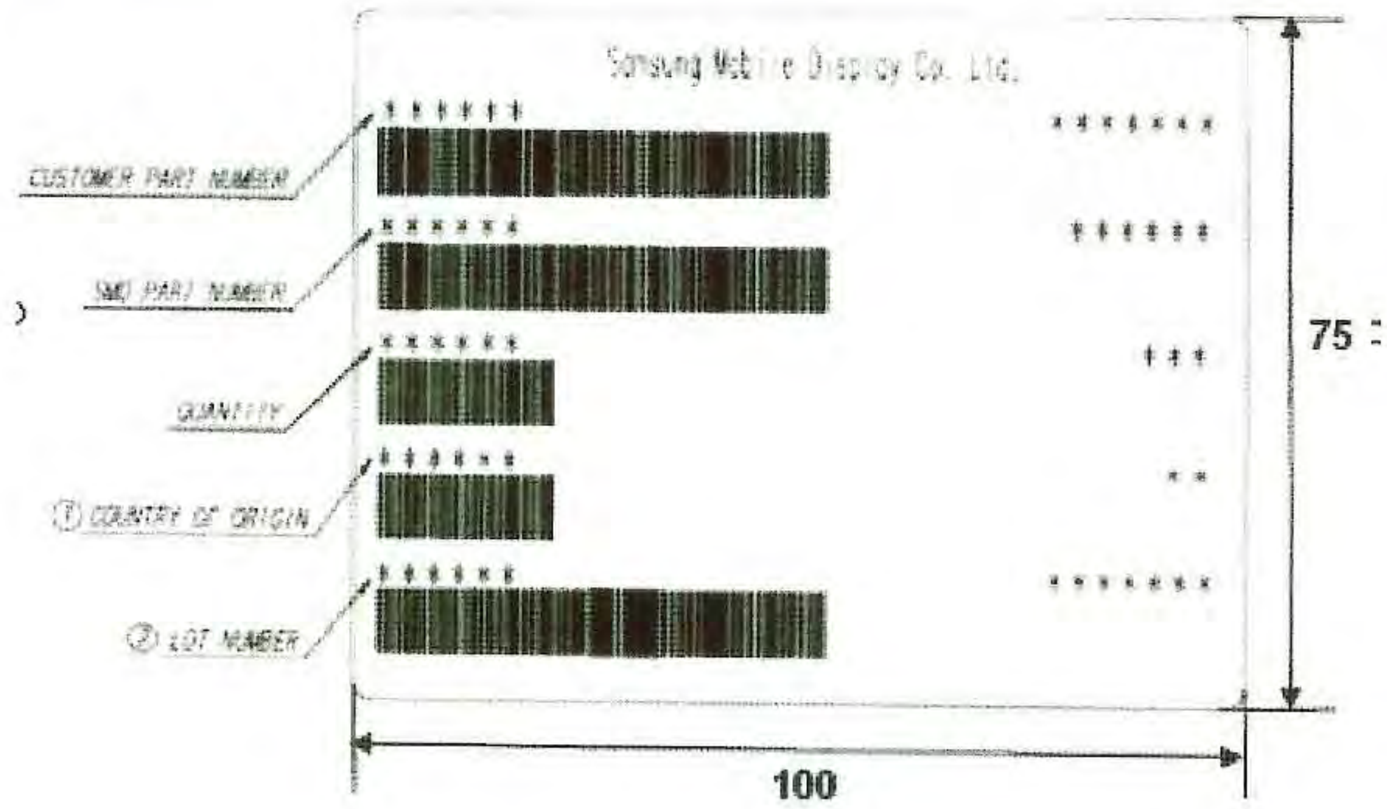

* Label-safety

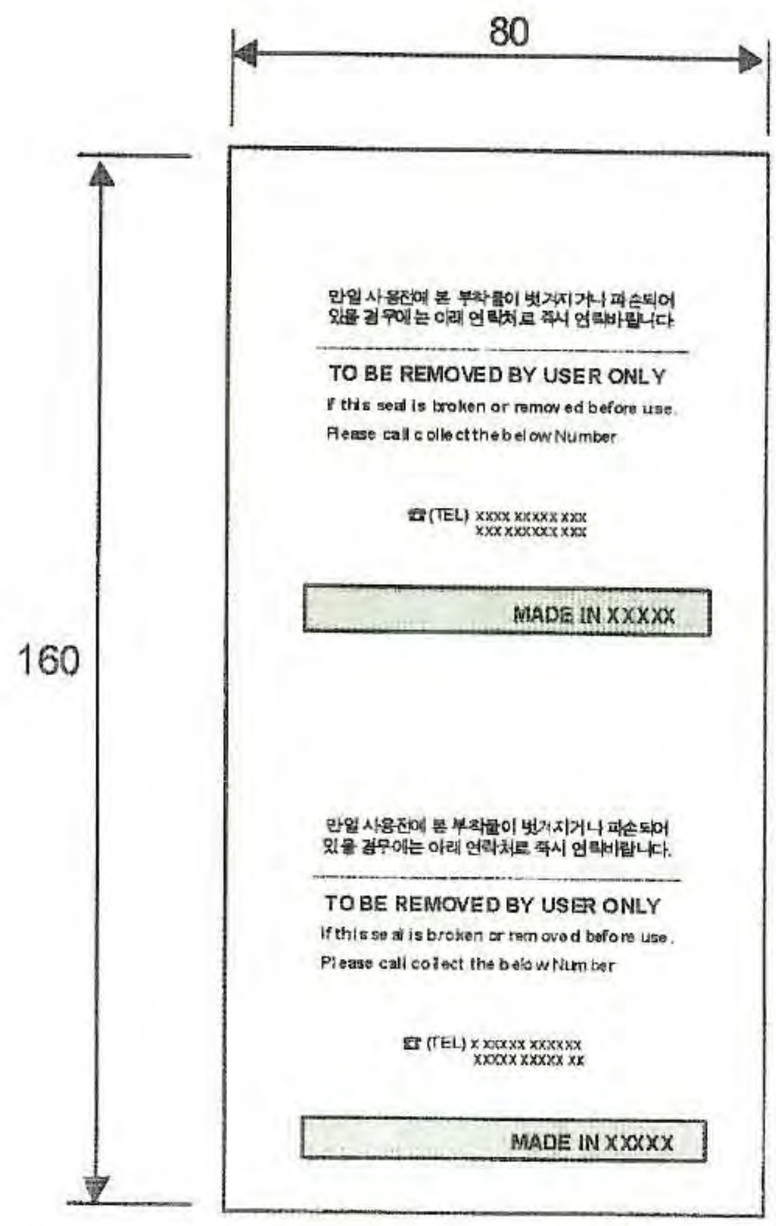

SAMSUNG Mobile Display CO., LTD.(All Rights Reserved).

One step solution for LCD / PDP / OLED panel application: Datasheet, inventory and accessory! www.panelook.com

Global LCD Panel Exchange Center www.panelook.com 屏库:全球液晶屏交易中心

13-2-3. Packing for small Quantities

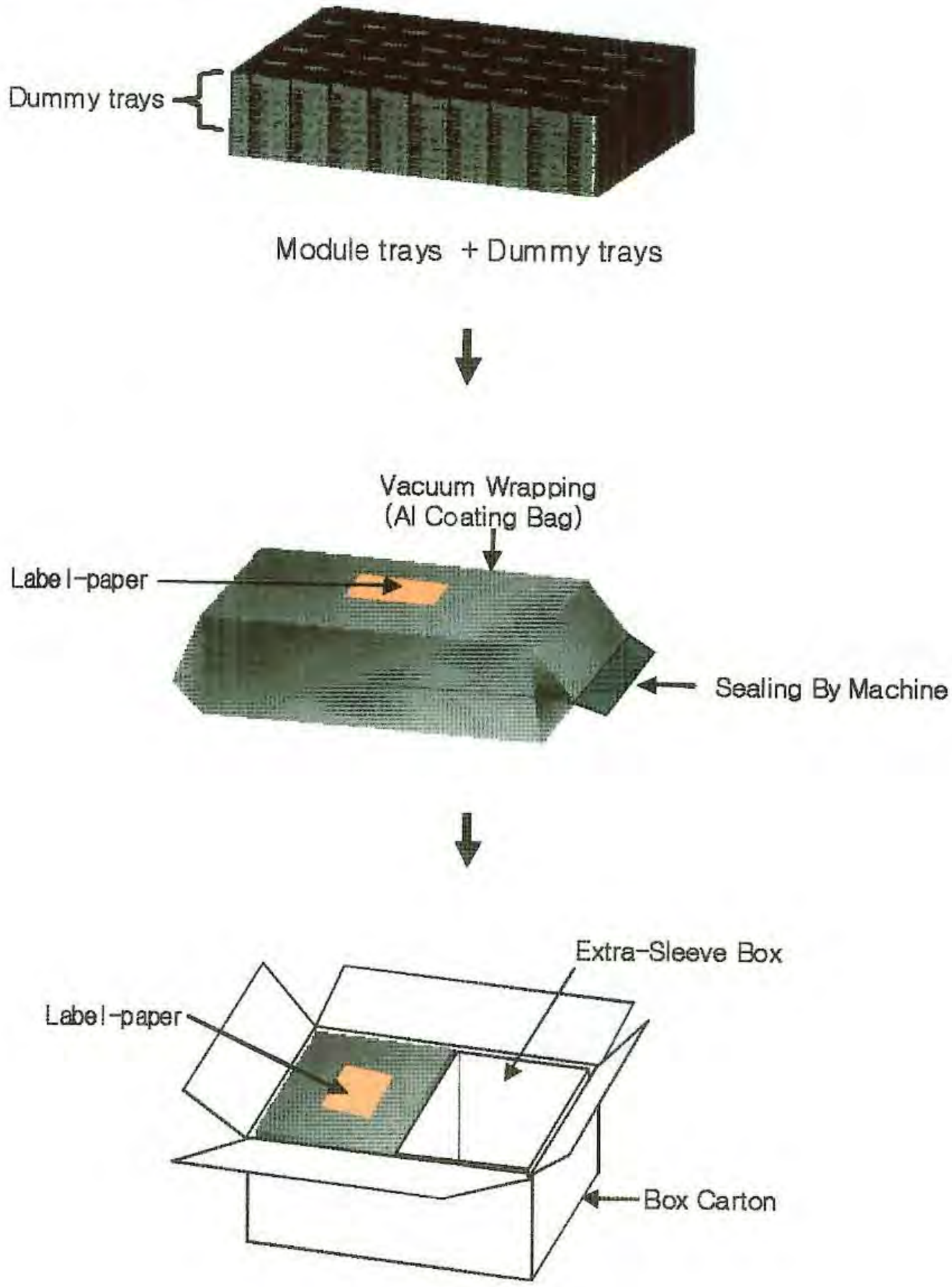

Note

(1) When package quantity is small, OLED Modules containing trays are stacked the bottom, and dummy trays are stacked at the top of package, then wrap the Al coating bag by vacuum sealing machine

(2) When only one tray bag (Vacuum wrapping bag) is available, dummy box is inserted into the vacant space

SAMSUNG Mobile Display CO., LTD.(All Rights Reserved).

One step solution for LCD / PDP / OLED panel application: Datasheet, inventory and accessory! www.panelook.com

Global LCD Panel Exchange Center www.panelook.com 屏库:全球液晶屏交易中心

13-2-4. Over pack

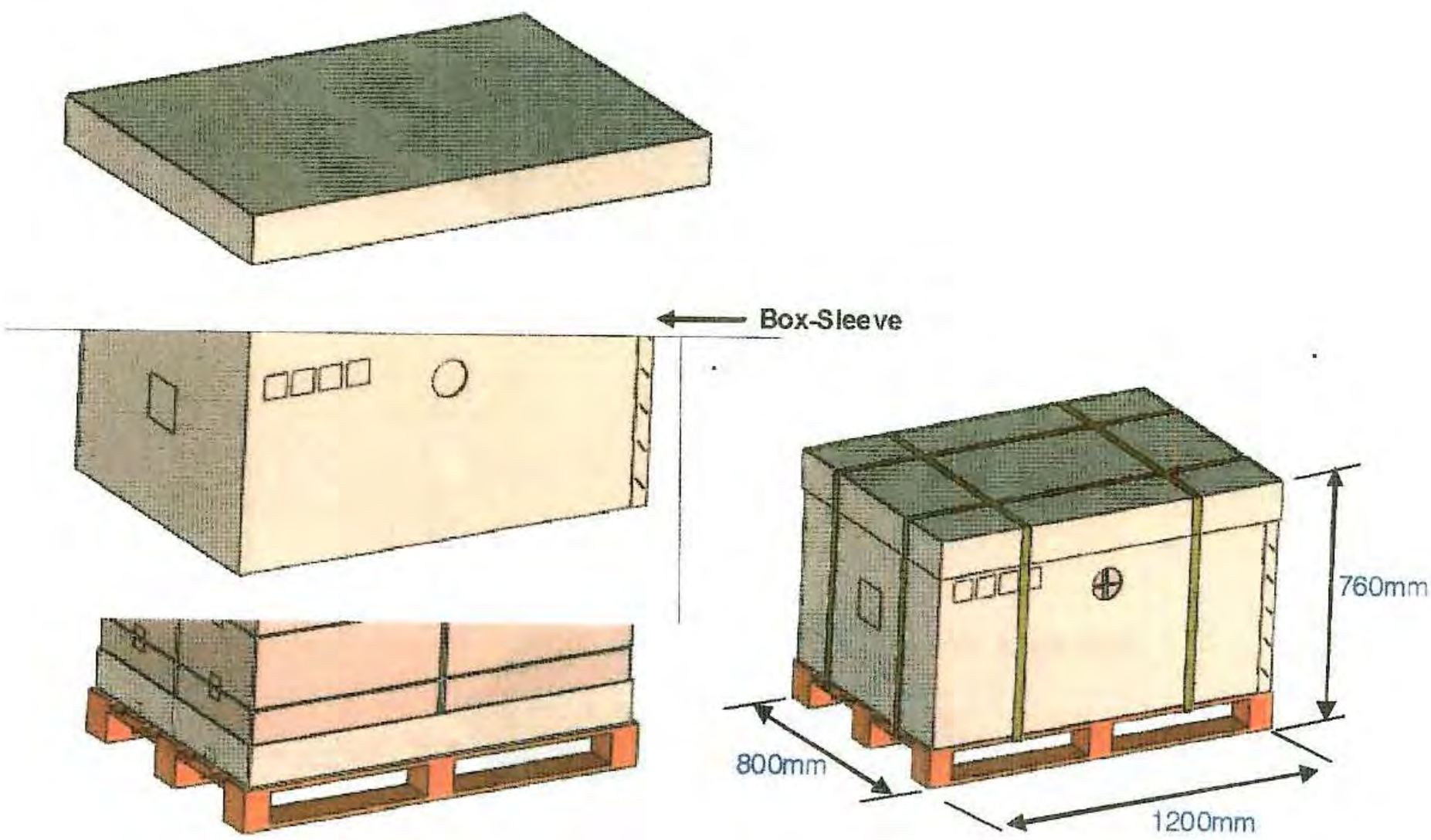

13-2-5. Packing for small Quantities

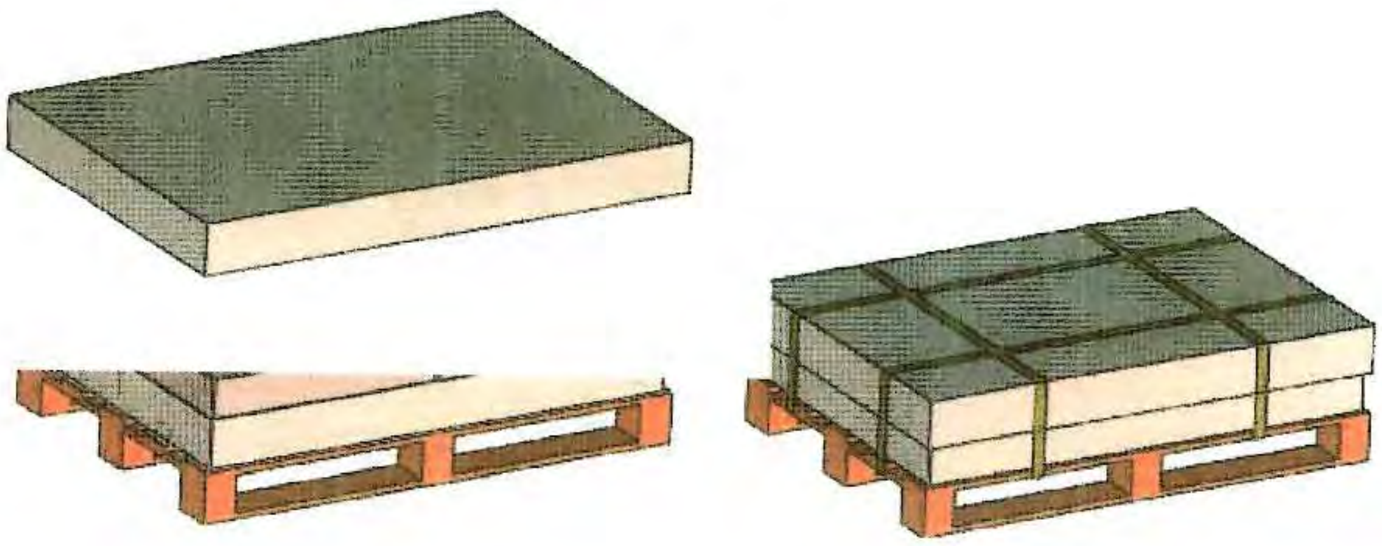

13-2-6. Over pack attach

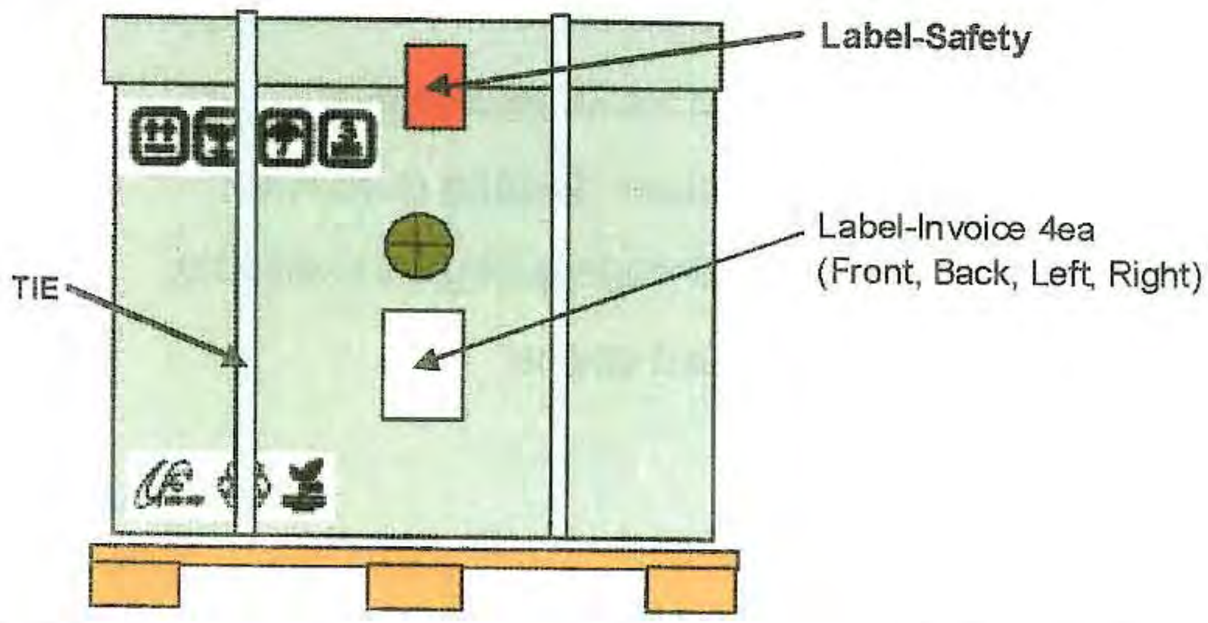

One step solution for LCD / PDP / OLED panel application: Datasheet, inventory and accessory! www.panelook.com

Global LCD Panel Exchange Center www.panelook.com 屏库:全球液晶屏交易中心

13-2-7. Tray Drawing

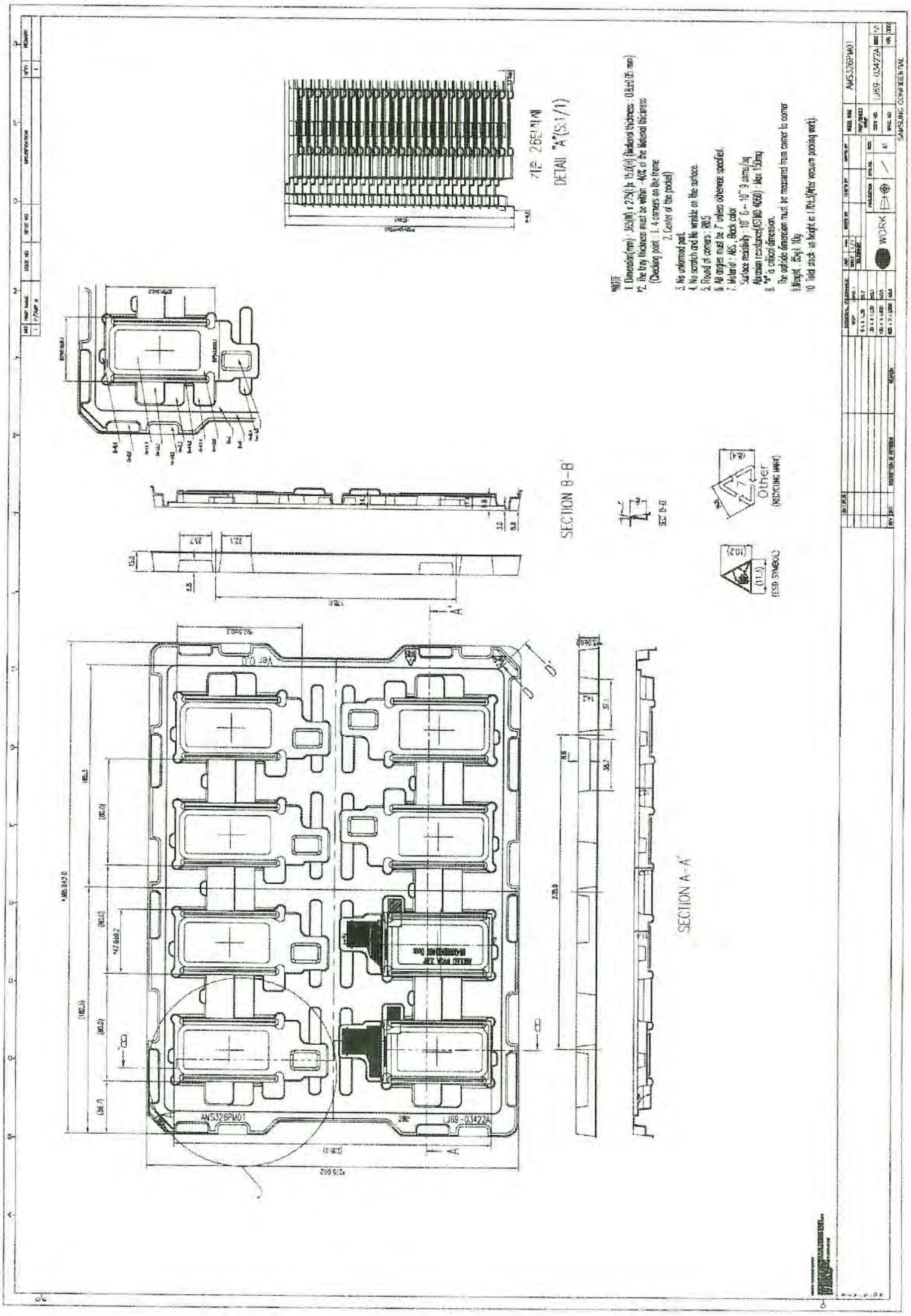

SAMSUNG Mobile Display CO., LTD.(All Rights Reserved).

Doc No. : AMS326PM01	TITLE : 3.26" 854×480, 16M AMOLED	Rev. : 0.5	47/48

One step solution for LCD / PDP / OLED panel application: Datasheet, inventory and accessory! www.panelook.com

Global LCD Panel Exchange Center www.panelook.com 屏库:全球液晶屏交易中心

13-2-8. Module Marking Rule

1 → AMS326PM01 | AAACE11 ← 2

3 → CA110420010

4 → he

1. Product code : AMS326PM01
2. Module ID : #######
3. Common Lot Marking : CA110420010
   J:Module Site, A:Shift, 110420:Date, 01:Ass'y line, O:SPL Section
4. Operator Initial

13-2-9. Rework Module Marking Rule

- Add "Black Dot" beside Model information on FPCB

SAMSUNG Mobile Display CO., LTD.(All Rights Reserved).

One step solution for LCD / PDP / OLED panel application: Datasheet, inventory and accessory! www.panelook.com

Global LCD Panel Exchange Center www.panelook.com 屏库:全球液晶屏交易中心

13-2-10. Carton Box Label

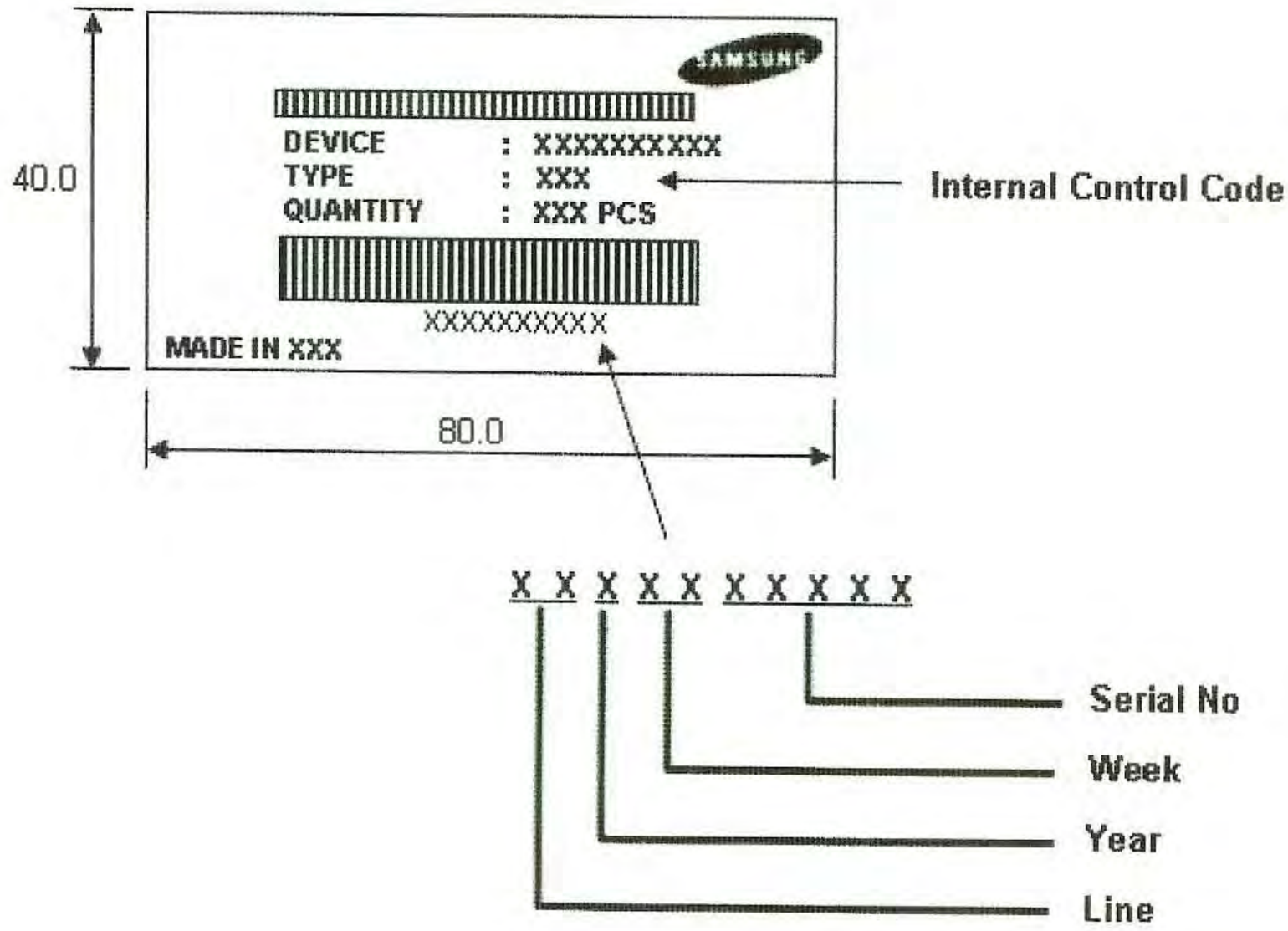

13-2-11. Refresh後 Module Marking Rule

- Add "Red Dot" left side of UL information on FPCB

SAMSUNG Mobile Display CO., LTD.(All Rights Reserved).

One step solution for LCD / PDP / OLED panel application: Datasheet, inventory and accessory! www.panelook.com

Global LCD Panel Exchange Center www.panelook.com 屏库:全球液晶屏交易中心

SAMSUNG
MOBILE DISPLAY

14. Schematic

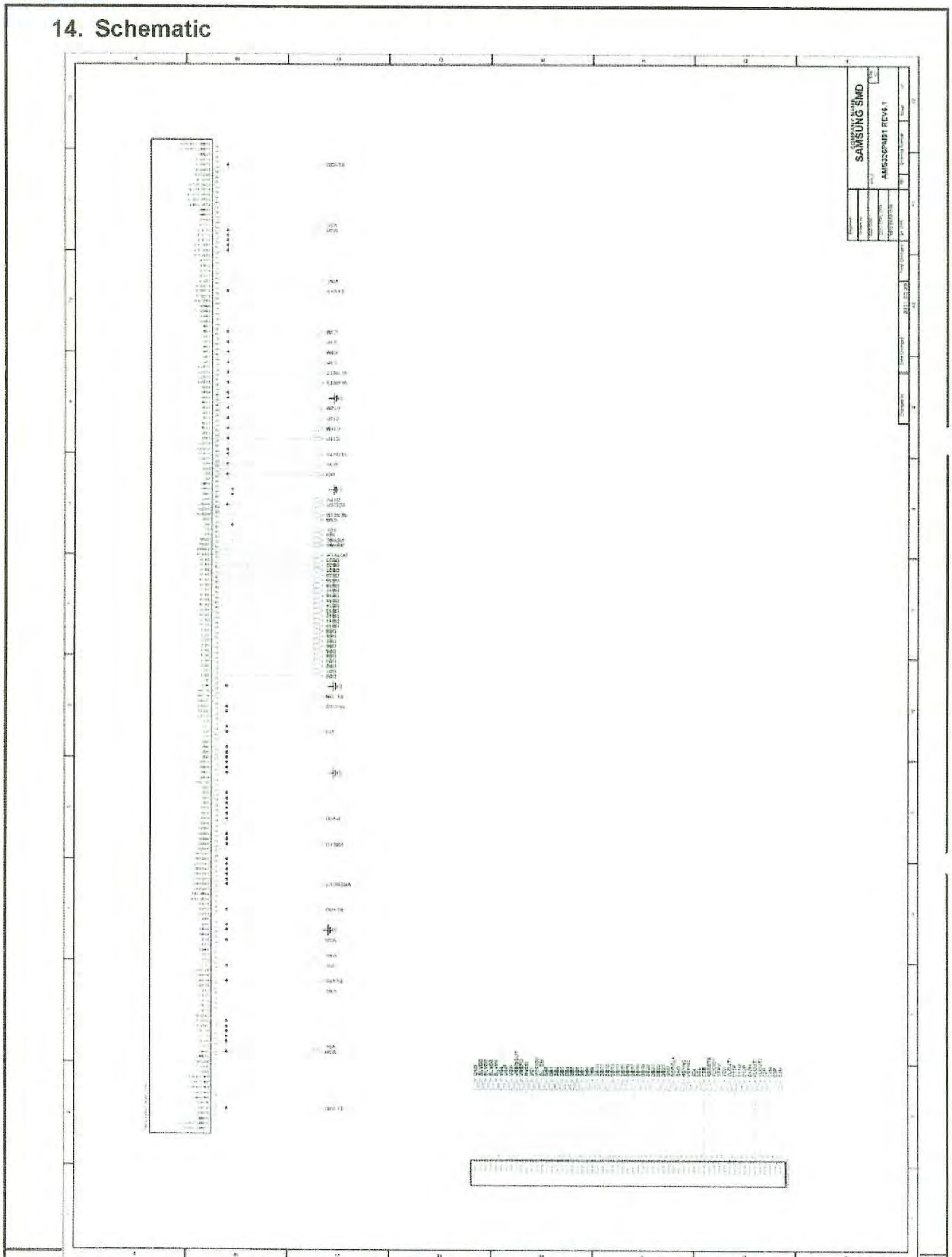

SAMSUNG Mobile Display CO., LTD.(All Rights Reserved).

Doc No. : AMS326PM01	TITLE : 3.26" 854×480, 16M AMOLED	Rev. : 0.5	50/48

One step solution for LCD / PDP / OLED panel application: Datasheet, inventory and accessory! www.panelook.com