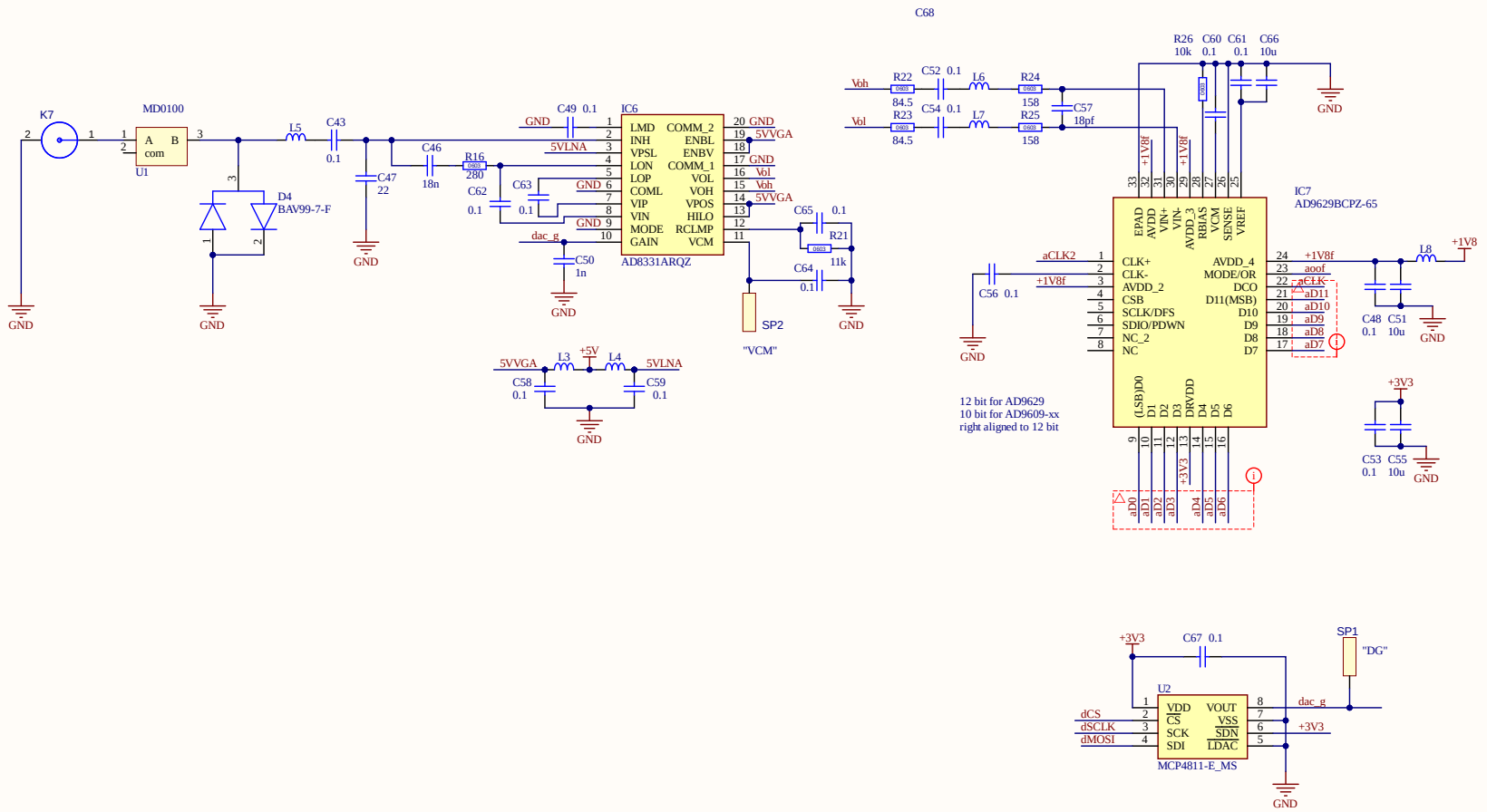

Title		
Size A3	Number	Revision
Date: 1.25.2022		Sheet of
File: E:\my_work\..\ft600_AD.SchDoc		Drawn By: