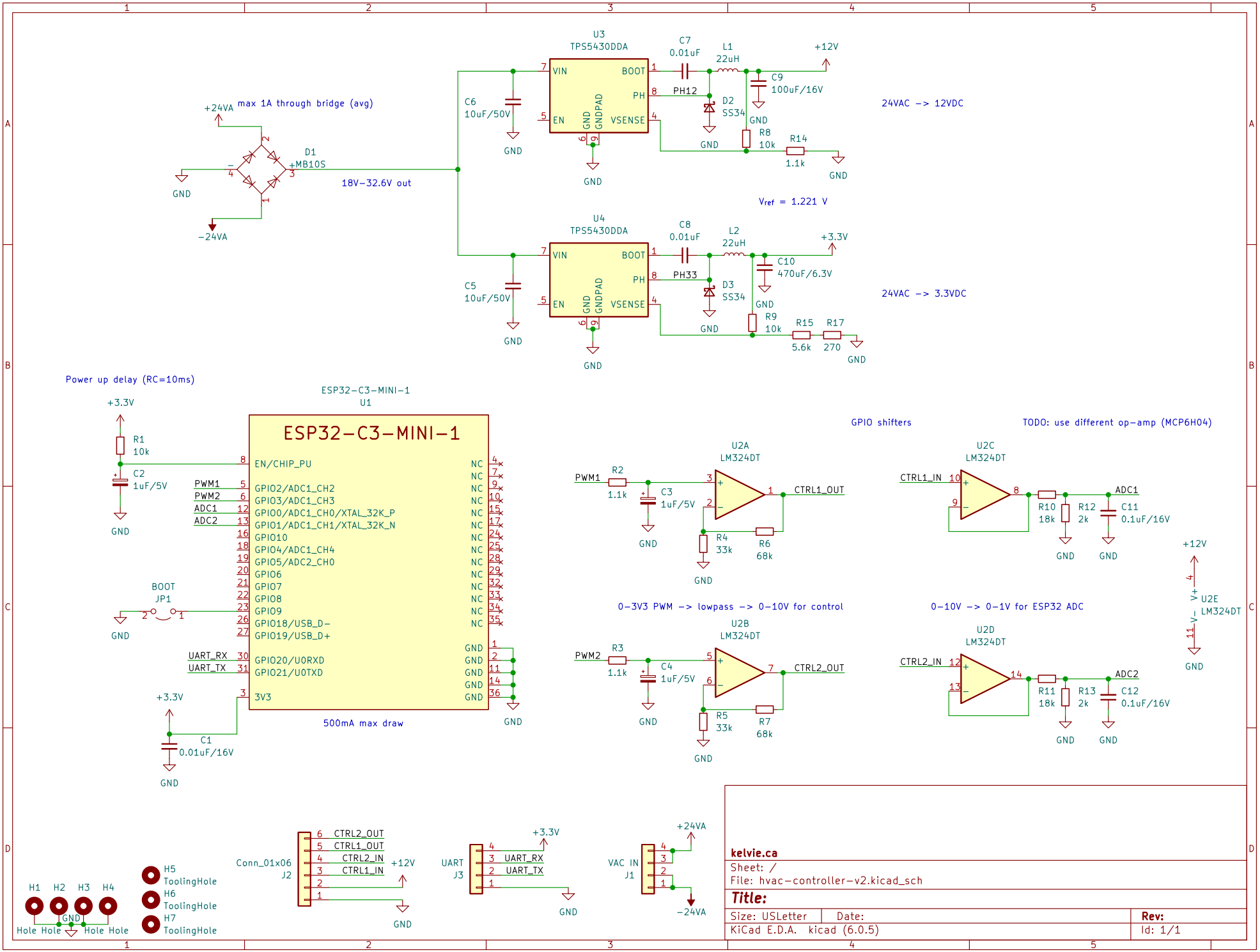
U3
TPS5430DDA
VIN
BOOT
PH
EN
GND
GNDPAD
VSENSE
C7
0.01uF
L1
22uH
+12V
C9
100uF/16V
PH12
D2
SS34
R8
10k
R14
1.1k
C6
10uF/50V
24VAC -> 12VDC
+24VA
max 1A through bridge (avg)
D1
MB10S
-24VA
18V-32.6V out
Vref = 1.221 V
U4
TPS5430DDA
C8
0.01uF
L2
22uH
+3.3V
C10
470uF/6.3V
PH33
D3
SS34
R9
10k
R15
5.6k
R17
270
C5
10uF/50V
24VAC -> 3.3VDC
Power up delay (RC=10ms)
ESP32-C3-MINI-1
U1
R1
10k
C2
1uF/5V
PWM1
PWM2
ADC1
ADC2
EN/CHIP_PU
GPIO2/ADC1_CH2
GPIO3/ADC1_CH3
GPIO0/ADC1_CH0/XTAL_32K_P
GPIO1/ADC1_CH1/XTAL_32K_N
GPIO10
GPIO4/ADC1_CH4
GPIO5/ADC2_CH0
GPIO6
GPIO7
GPIO8
GPIO9
GPIO18/USB_D-
GPIO19/USB_D+
BOOT
JP1
UART_RX
UART_TX
GPIO20/U0RXD
GPIO21/U0TXD
3V3
C1
0.01uF/16V
500mA max draw
NC
GND
GPIO shifters
TODO: use different op-amp (MCP6H04)
U2A
LM324DT
R2
1.1k
C3
1uF/5V
R4
33k
R6
68k
CTRL1_OUT
U2C
LM324DT
CTRL1_IN
R10
18k
R12
2k
C11
0.1uF/16V
ADC1
0-3V3 PWM -> lowpass -> 0-10V for control
0-10V -> 0-1V for ESP32 ADC
U2B
LM324DT
R3
1.1k
C4
1uF/5V
R5
33k
R7
68k
CTRL2_OUT
U2D
LM324DT
CTRL2_IN
R11
18k
R13
2k
C12
0.1uF/16V
ADC2
U2E
LM324DT
V+
V-
H1
H2
H3
H4
Hole
Hole
Hole
Hole
H5
ToolingHole
H6
ToolingHole
H7
ToolingHole
Conn_01x06
J2
CTRL2_OUT
CTRL1_OUT
CTRL2_IN
CTRL1_IN
UART
J3
UART_RX
UART_TX
VAC IN
J1
kelvie.ca
Sheet: /
File: hvac-controller-v2.kicad_sch
Title:
Size: USLetter
Date:
Rev:
KiCad E.D.A. kicad (6.0.5)
Id: 1/1