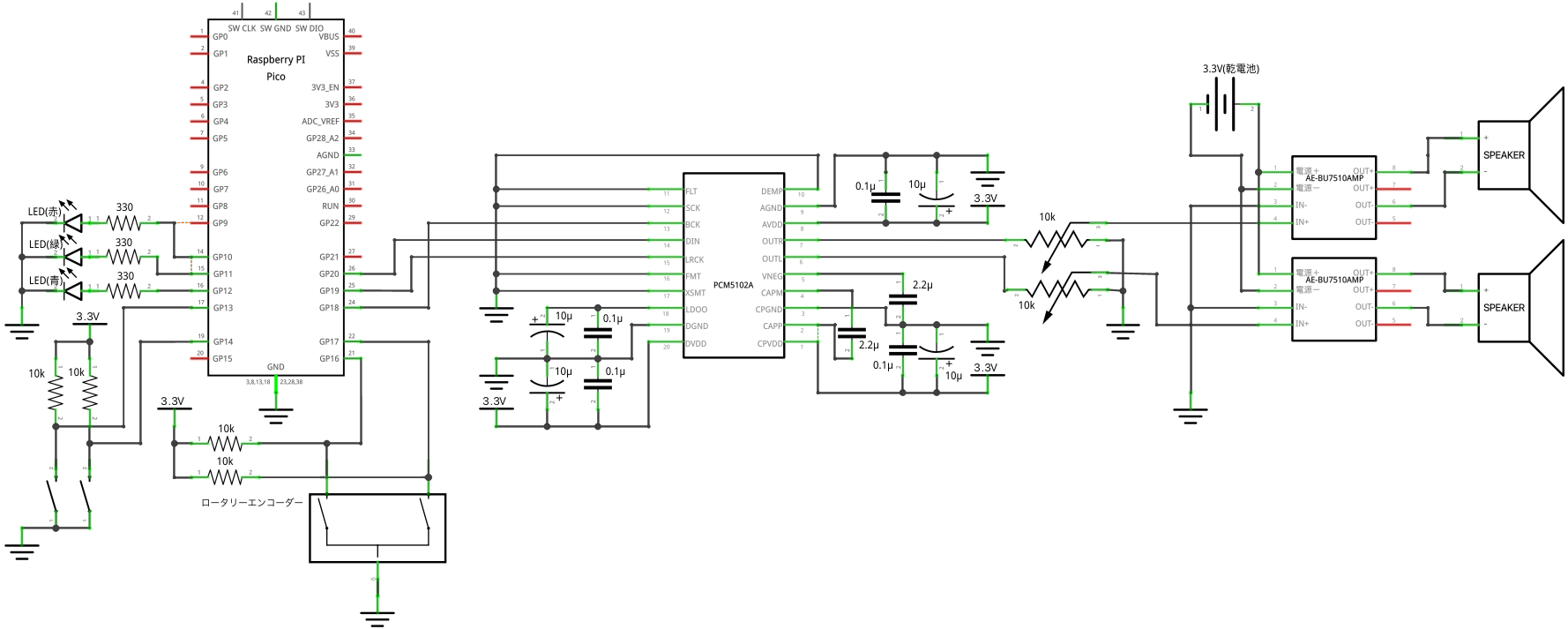
Raspberry PI
Pico
SW CLK
SW GND
SW DIO
GP0
GP1
GP2
GP3
GP4
GP5
GP6
GP7
GP8
GP9
GP10
GP11
GP12
GP13
GP14
GP15
VBUS
VSS
3V3_EN
3V3
ADC_VREF
GP28_A2
AGND
GP27_A1
GP26_A0
RUN
GP22
GP21
GP20
GP19
GP18
GP17
GP16
GND
LED(赤)
LED(緑)
LED(青)
330
330
330
3.3V
10k
10k
3.3V
10k
10k
ロータリーエンコーダー
PCM5102A
FLT
SCK
BCK
DIN
LRCK
FMT
XSMT
LDOO
DGND
DVDD
DEMP
AGND
AVDD
OUTR
OUTL
VNEG
CAPM
CPGND
CAPP
CPVDD
0.1μ
10μ
3.3V
2.2μ
2.2μ
0.1μ
10μ
3.3V
10k
10k
3.3V(乾電池)
AE-BU7510AMP
電源＋
電源－
IN-
IN+
OUT+
OUT+
OUT-
OUT-
SPEAKER
SPEAKER
fritzing