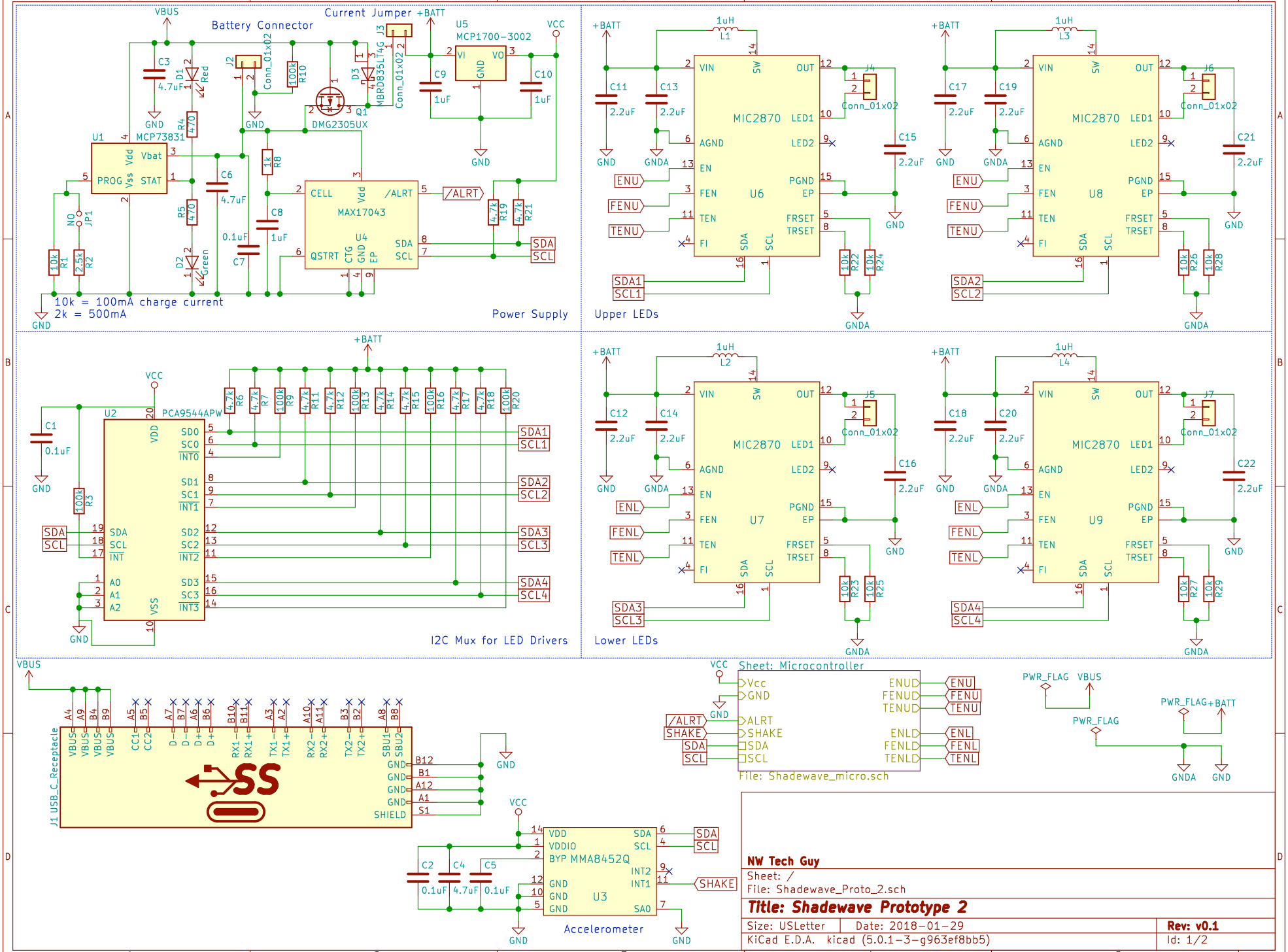
Battery Connector
Current Jumper
U5
MCP1700-3002
U1
MCP73831
Q1
DMG2305UX
D3
MBRD835LT4G
U4
MAX17043
10k = 100mA charge current
2k = 500mA
Power Supply
U6
U8
Upper LEDs
U2
PCA9544APW
I2C Mux for LED Drivers
U7
U9
Lower LEDs
J1 USB_C_Receptacle
Sheet: Microcontroller
File: Shadewave_micro.sch
U3
MMA8452Q
Accelerometer
NW Tech Guy
Sheet: /
File: Shadewave_Proto_2.sch
Title: Shadewave Prototype 2
Size: USLetter
Date: 2018-01-29
Rev: v0.1
KiCad E.D.A. kicad (5.0.1-3-g963ef8bb5)
Id: 1/2

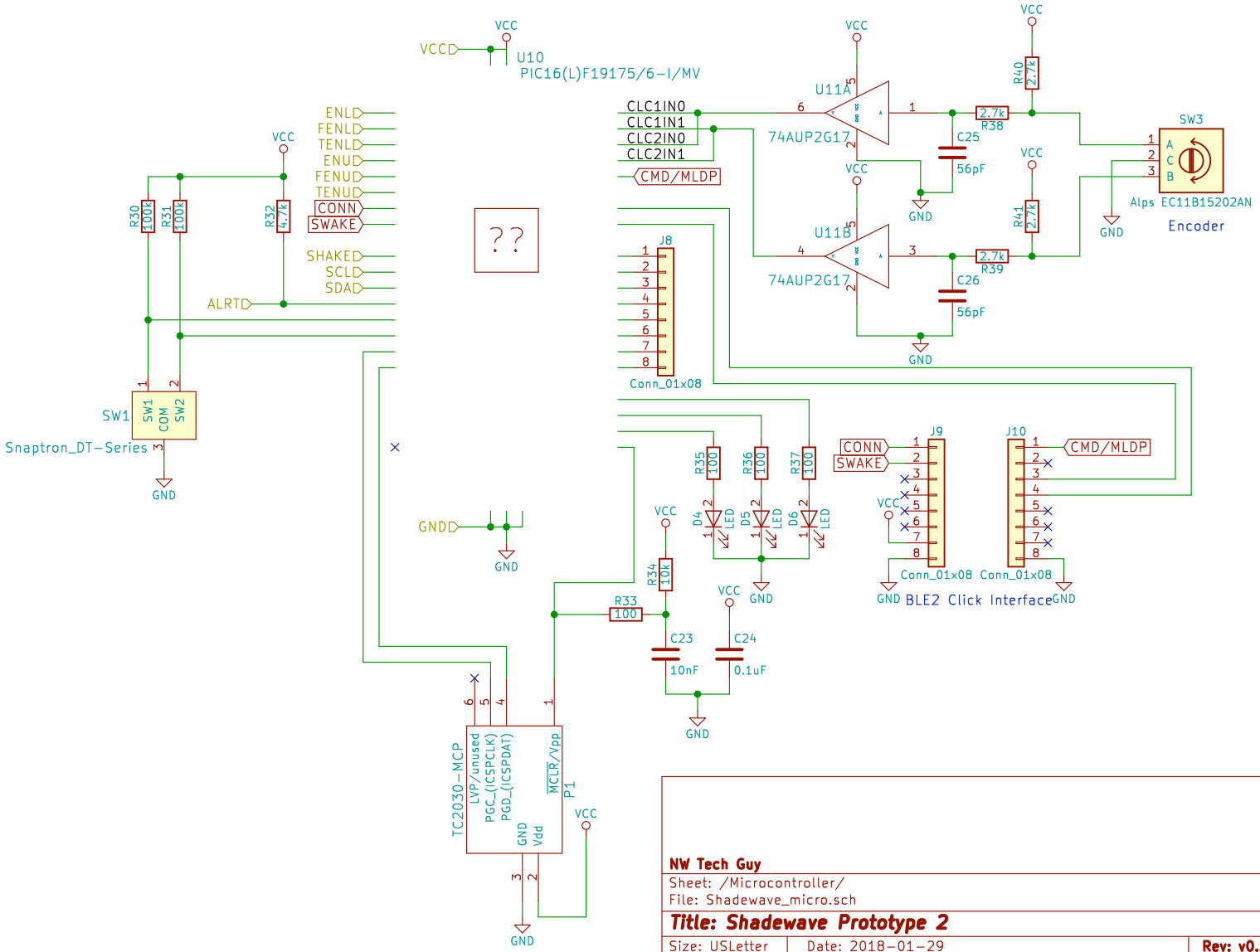

NW Tech Guy

Sheet: /Microcontroller/

File: Shadewave_micro.sch

Title: Shadewave Prototype 2

Size: USLetter	Date: 2018-01-29	**Rev: v0.1**
KiCad E.D.A. kicad (5.0.1-3-g963ef8bb5)		Id: 2/2