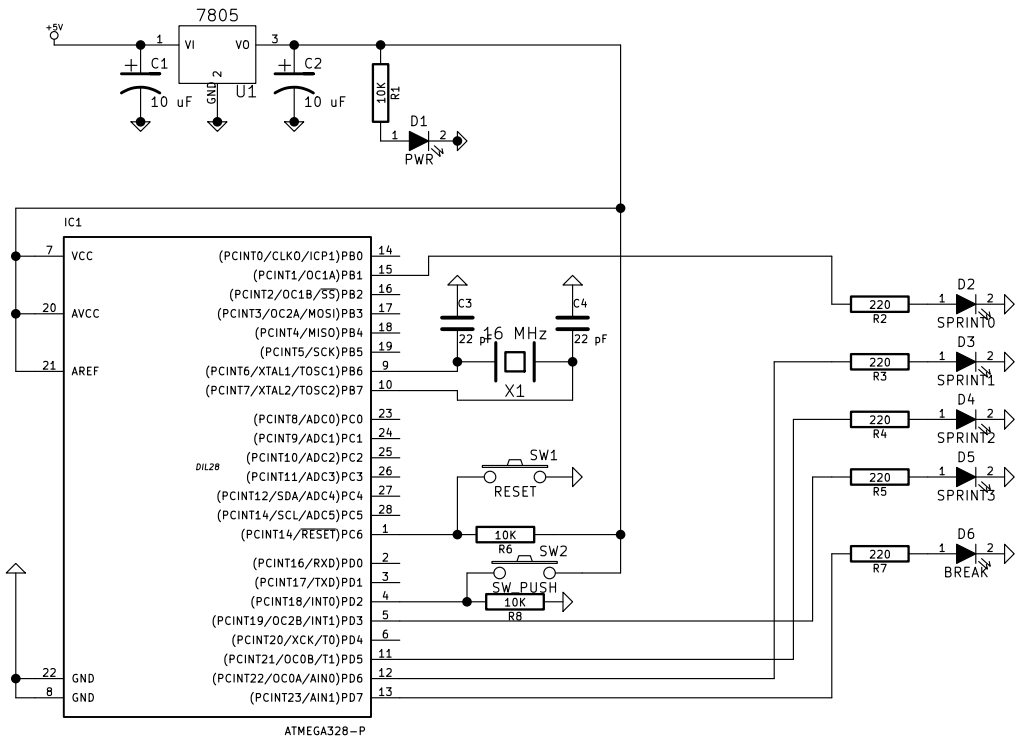

Untested Draft

Ken Barbour

Sheet: /

File: pomodoro.sch

Title: Pomodoro Timer

Size: USLetter	Date: 12 Mar 2016	**Rev: A**
KiCad E.D.A. eeschema (2014-jan-25)-product		Id: 1/1