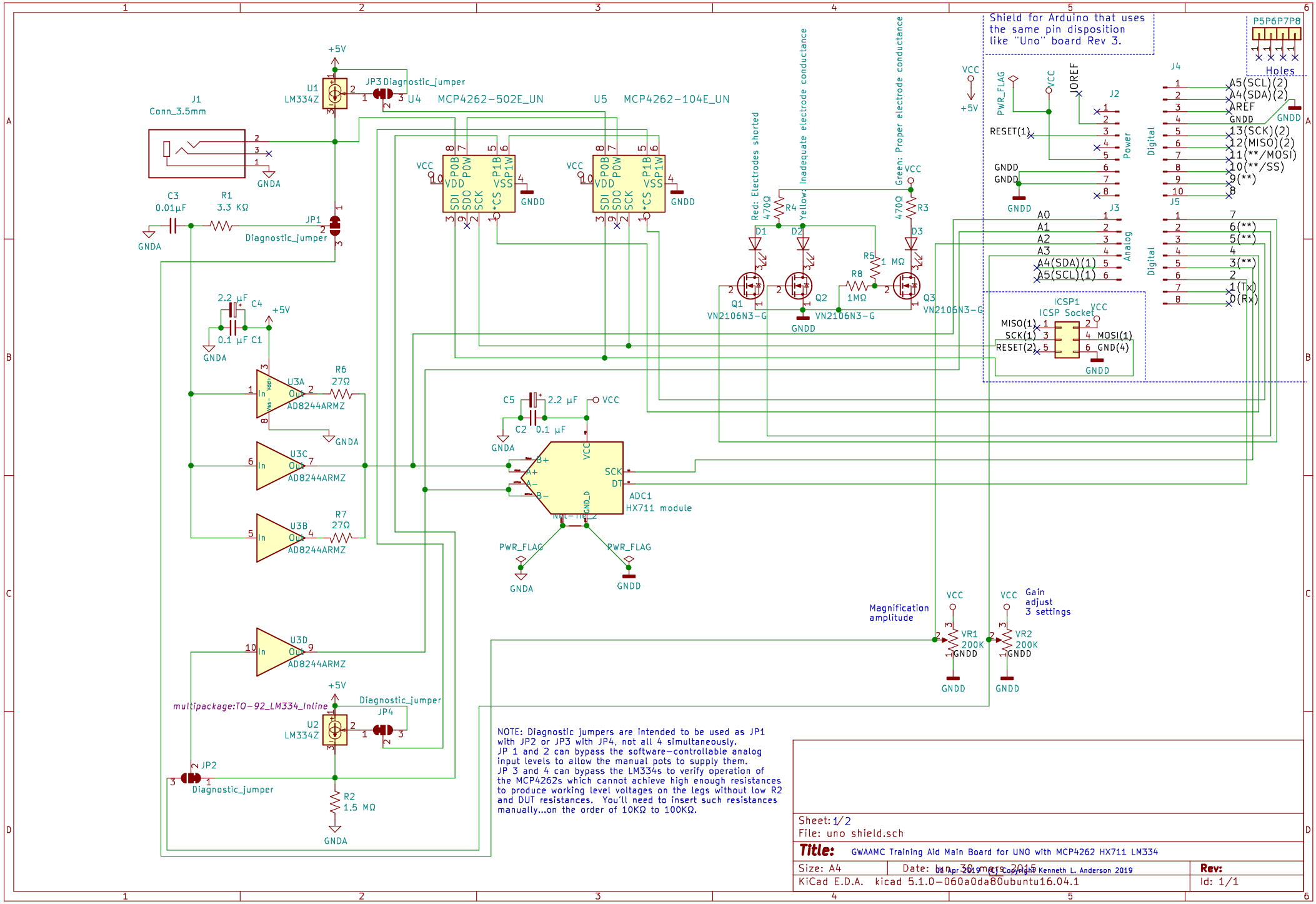
Shield for Arduino that uses the same pin disposition like "Uno" board Rev 3.
P5P6P7P8
Holes
J1
Conn_3.5mm
U1
LM334Z
JP3 Diagnostic_jumper
U4 MCP4262-502E_UN
U5 MCP4262-104E_UN
C3
0.01µF
R1
3.3 KΩ
JP1
Diagnostic_jumper
C4
2.2 µF
C1
0.1 µF
U3A
AD8244ARMZ
R6
27Ω
U3C
AD8244ARMZ
U3B
AD8244ARMZ
R7
27Ω
U3D
AD8244ARMZ
multipackage:TO-92_LM334_Inline
U2
LM334Z
JP4
Diagnostic_jumper
JP2
Diagnostic_jumper
R2
1.5 MΩ
C5
2.2 µF
C2
0.1 µF
ADC1
HX711 module
Red: Electrodes shorted
Yellow: Inadequate electrode conductance
Green: Proper electrode conductance
R4
470Ω
R3
470Ω
D1
D2
D3
R5
1 MΩ
R8
1MΩ
Q1
VN2106N3-G
Q2
VN2106N3-G
Q3
VN2106N3-G
J2
Power
J3
Analog
J4
Digital
J5
Digital
ICSP1
ICSP Socket
Magnification amplitude
VR1
200K
Gain adjust 3 settings
VR2
200K
NOTE: Diagnostic jumpers are intended to be used as JP1 with JP2 or JP3 with JP4, not all 4 simultaneously.
JP 1 and 2 can bypass the software-controllable analog input levels to allow the manual pots to supply them.
JP 3 and 4 can bypass the LM334s to verify operation of the MCP4262s which cannot achieve high enough resistances to produce working level voltages on the legs without low R2 and DUT resistances. You'll need to insert such resistances manually...on the order of 10KΩ to 100KΩ.
Sheet: 1/2
File: uno shield.sch
Title: GWAAMC Training Aid Main Board for UNO with MCP4262 HX711 LM334
Size: A4
Date: lun. 30 mars 2015
04 Apr 2019 © Copyright Kenneth L. Anderson 2019
Rev:
KiCad E.D.A. kicad 5.1.0-060a0da80ubuntu16.04.1
Id: 1/1