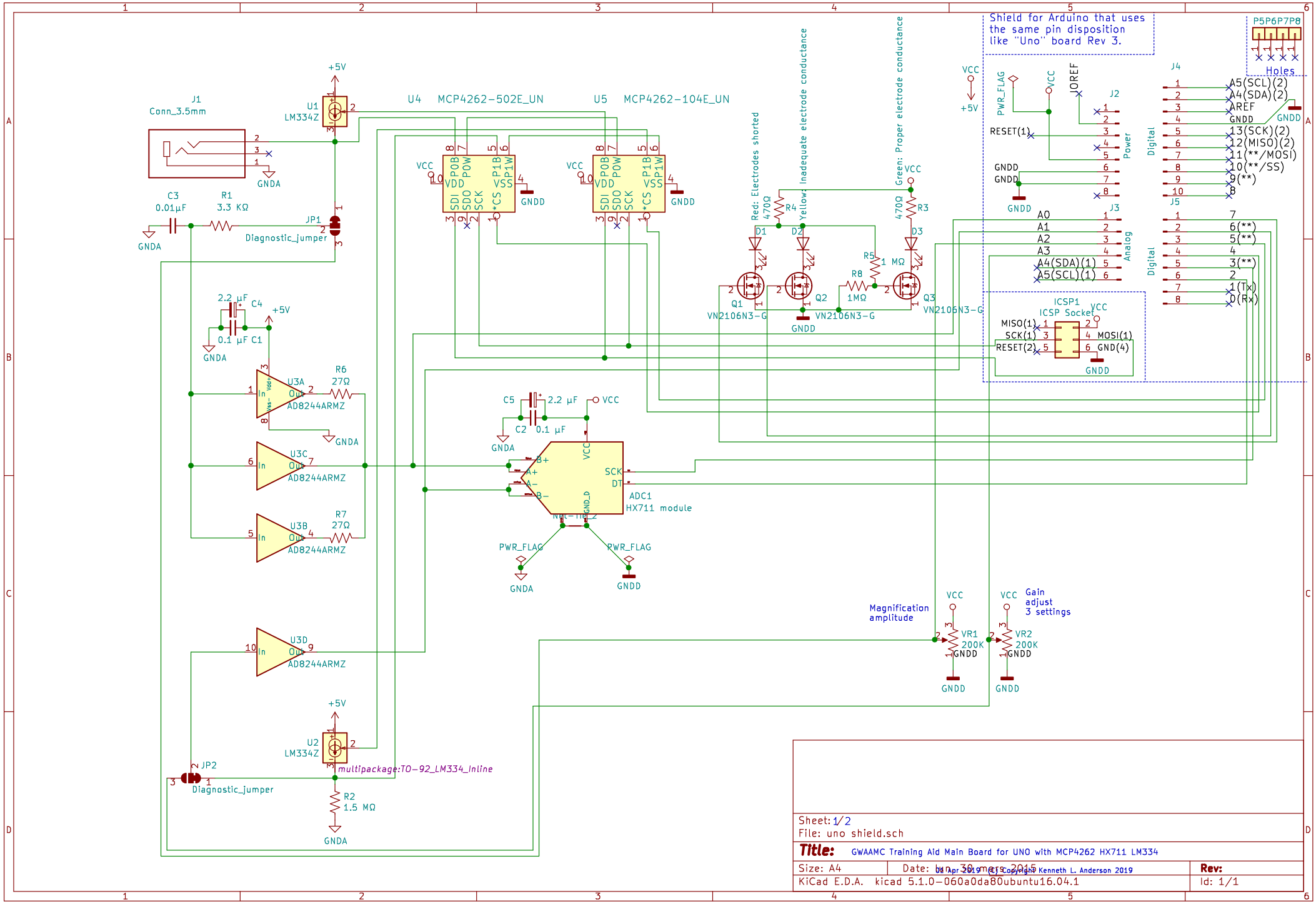

Sheet: 1/2
File: uno shield.sch

Title: GWAAMC Training Aid Main Board for UNO with MCP4262 HX711 LM334

Size: A4 | Date: lun. 30 mars 2015 | 04 Apr 2019 © Copyright Kenneth L. Anderson 2019 | **Rev:**

KiCad E.D.A. kicad 5.1.0-060a0da80ubuntu16.04.1 | Id: 1/1