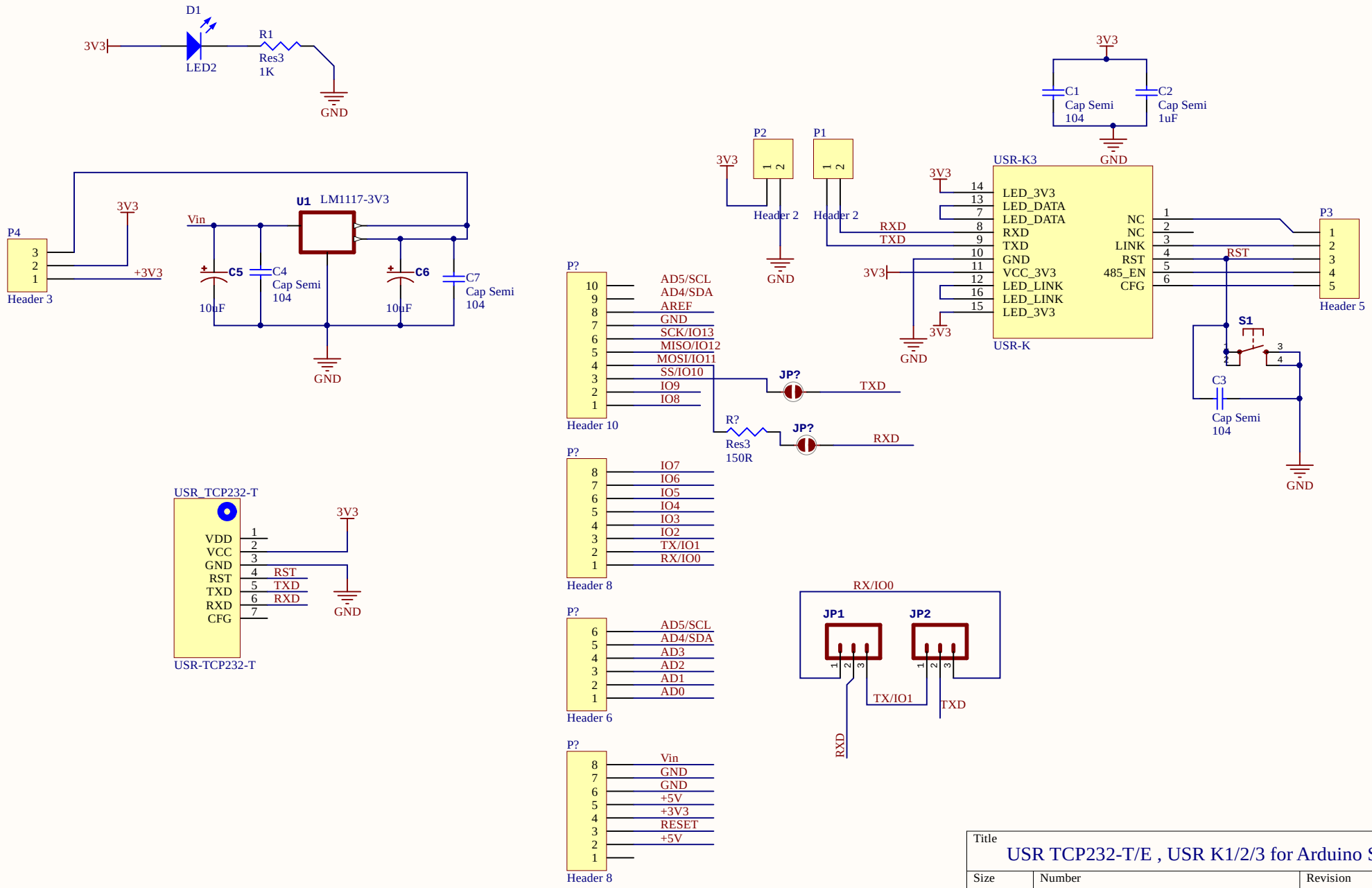

Title		
USR TCP232-T/E , USR K1/2/3 for Arduino Shield		
Size A4	Number	Revision
Date: 2016/7/20	Sheet of	
File: C:\Users\..\USR_K2K3_V1.SchDoc	Drawn By: ken@decade.tw	