Example 5: Howland current pump

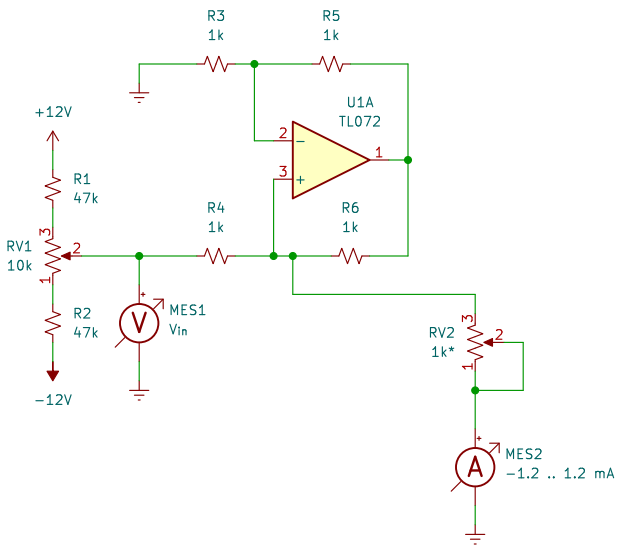

Example 5 (revised): Howland with input buffer

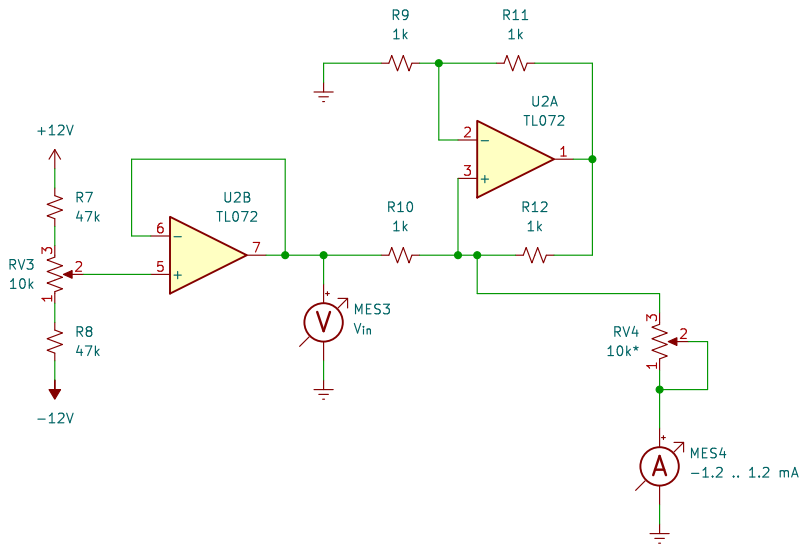

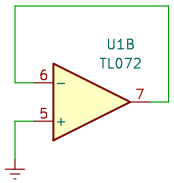

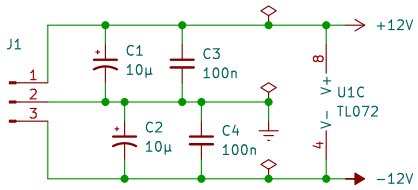

* Initial demo is with a 0..1 kΩ load.
Voltage compliance demos use a 0..10 kΩ load instead.
Data collection for spreadsheet analysis uses a substitution box instead of a pot for the load resistor.

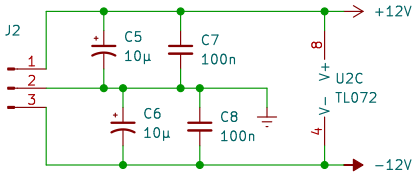

$R_5/R_3 = R_6/R_4$
$I_{out} = -V_{in}/R_4$

"Textbook" Howland current pump has poor voltage compliance and cannot be scaled to large currents without substantial additional work (and inefficiency).

open source hardware

Op-Amp Basics
Episode 14 – Transcoductance Amplifiers 1
Kludges from Kevin's Cave

Sheet: /
File: Transconductance3-Howland.kicad_sch

Title: Howland Current Pumps

Size: A	Date: 2026-02-07	**Rev: A**
KiCad E.D.A. kicad 7.0.11+dfsg-1build4		Id: 1/1