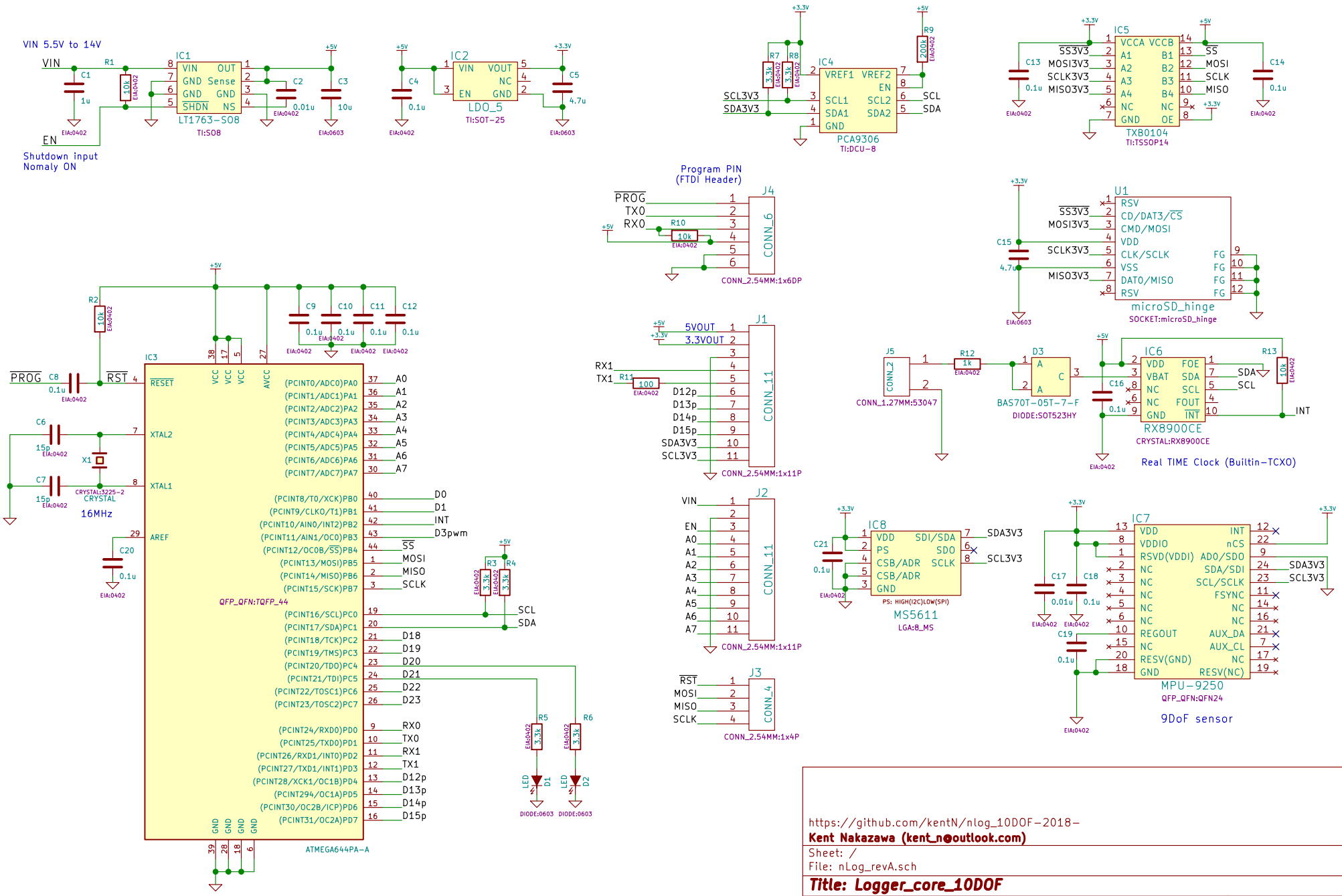
VIN 5.5V to 14V
IC1
LT1763-SO8
TI:SO8
Shutdown input
Nomaly ON
IC2
LDO_5
TI:SOT-25
IC4
PCA9306
TI:DCU-8
IC5
TXB0104
TI:TSSOP14
Program PIN
(FTDI Header)
J4
CONN_6
CONN_2.54MM:1x6DP
U1
microSD_hinge
SOCKET:microSD_hinge
J1
CONN_11
CONN_2.54MM:1x11P
J5
CONN_2
CONN_1.27MM:53047
D3
BAS70T-05T-7-F
DIODE:SOT523HY
IC6
RX8900CE
CRYSTAL:RX8900CE
Real TIME Clock (Builtin-TCXO)
IC3
ATMEGA644PA-A
QFP_QFN:TQFP_44
CRYSTAL
16MHz
J2
CONN_11
CONN_2.54MM:1x11P
IC8
MS5611
LGA:8_MS
PS: HIGH(I2C)LOW(SPI)
IC7
MPU-9250
QFP_QFN:QFN24
9DoF sensor
J3
CONN_4
CONN_2.54MM:1x4P
https://github.com/kentN/nlog_10DOF-2018-
Kent Nakazawa (kent_n@outlook.com)
Sheet: /
File: nLog_revA.sch
Title: Logger_core_10DOF
Size: A4
Date: 2018-05-19
Rev: E
KiCad E.D.A. kicad (5.1.0)-1
Id: 1/1