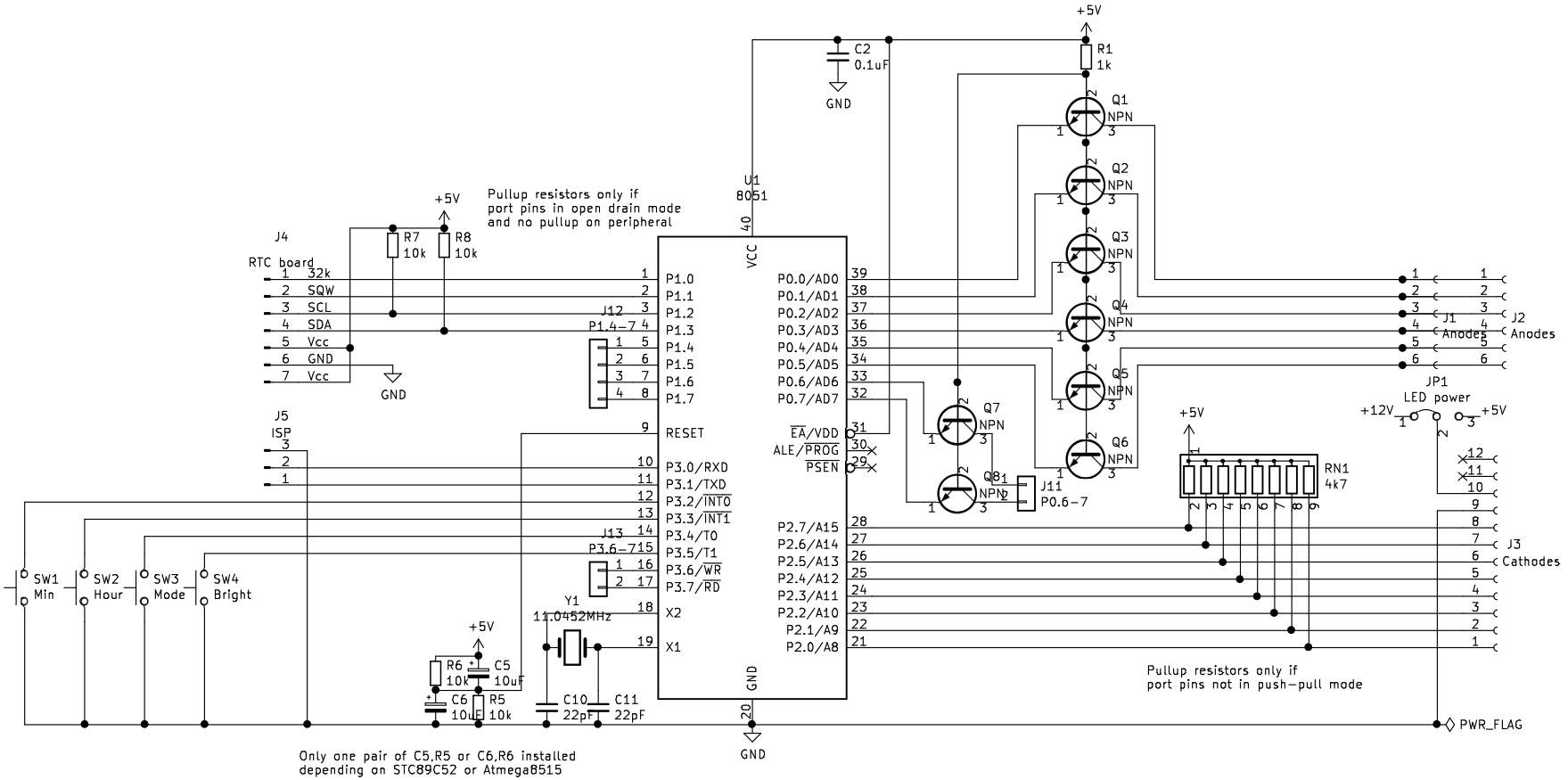

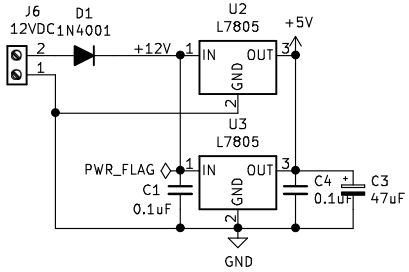

H1 H2 H3 H4 H5

Sheet: /
File: 89c52board.sch

Title: Clock

Size: A4	Date: 2020-08-24	**Rev: 1**
KiCad E.D.A. kicad 5.1.8-5.1.8		Id: 1/1