CSE 4392 Special Topics
Natural Language Processing

Recurrent Neural Networks

2026 Spring

Overview

- What is a recurrent neural network (RNN)?
- Simple RNNs
- Backpropagation through time
- Long short-term memory networks (LSTMs)
- Applications
- Variants: Stacked RNNs, Bidirectional RNNs

Recurrent Neural Networks (RNNs)

- A class of neural networks designed to handle **variable length inputs**.

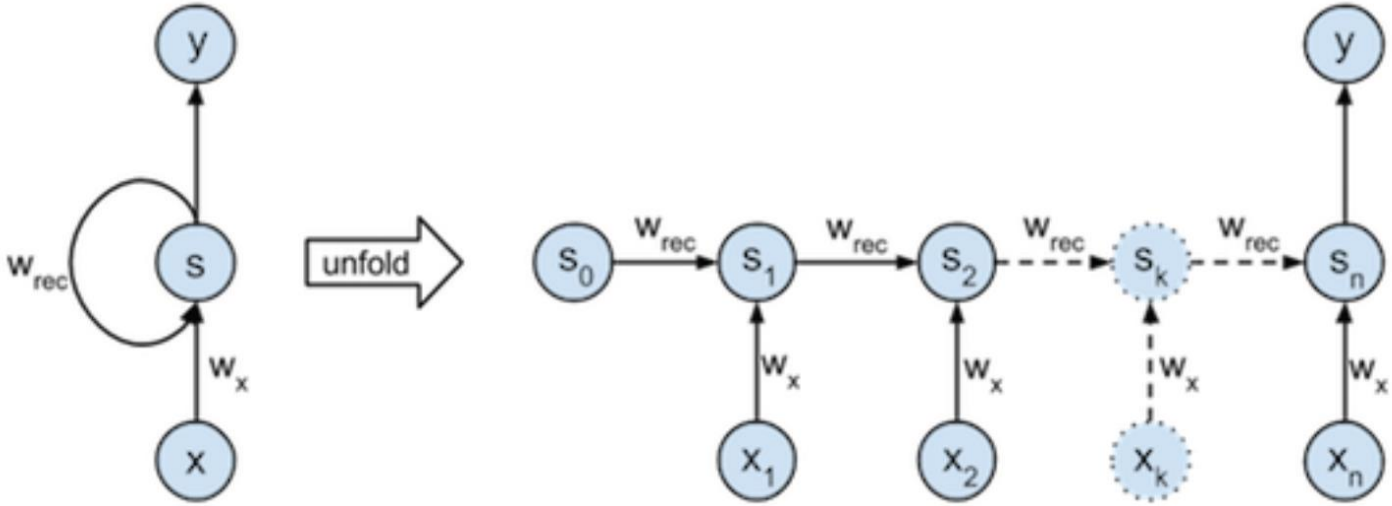

- A function: $y = RNN(\boldsymbol{x}_1, \boldsymbol{x}_2, \dots, \boldsymbol{x}_n) \in \mathbb{R}^d$

  where $x_i \in \mathbb{R}^{d_{in}}$

Recurrent Neural Networks (RNNs)

- Shown to be a highly effective approach to language model, sequence tagging and classification tasks:

Language modeling

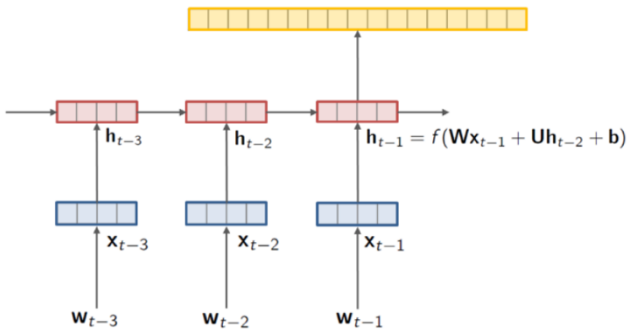

Sequence tagging

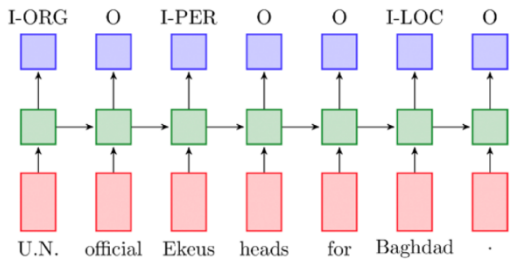

Text classification

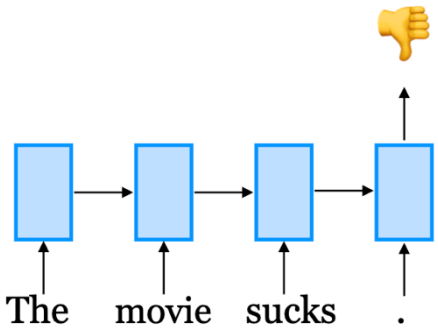

Recurrent Neural Networks

- Form the basis for the modern approaches to machine translation, question answering and dialogue systems:

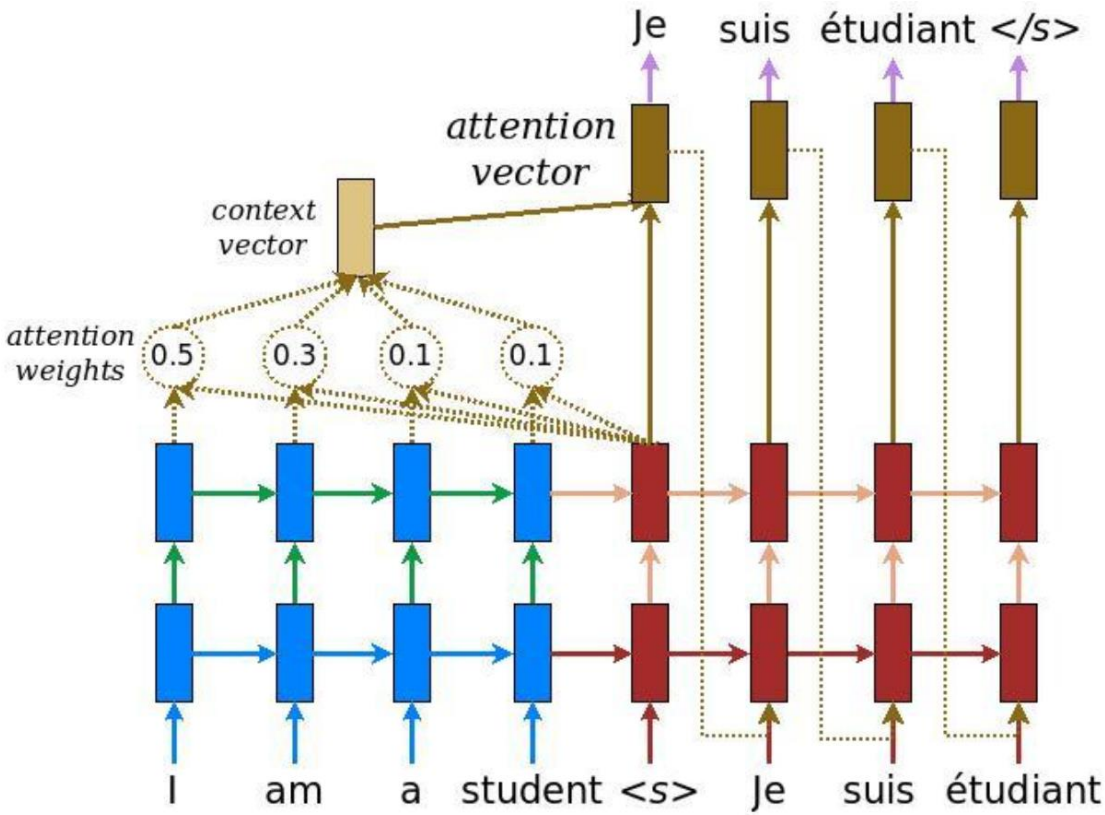

Why Variable Length?

- Recall the feed-forward neural LMs we learned:

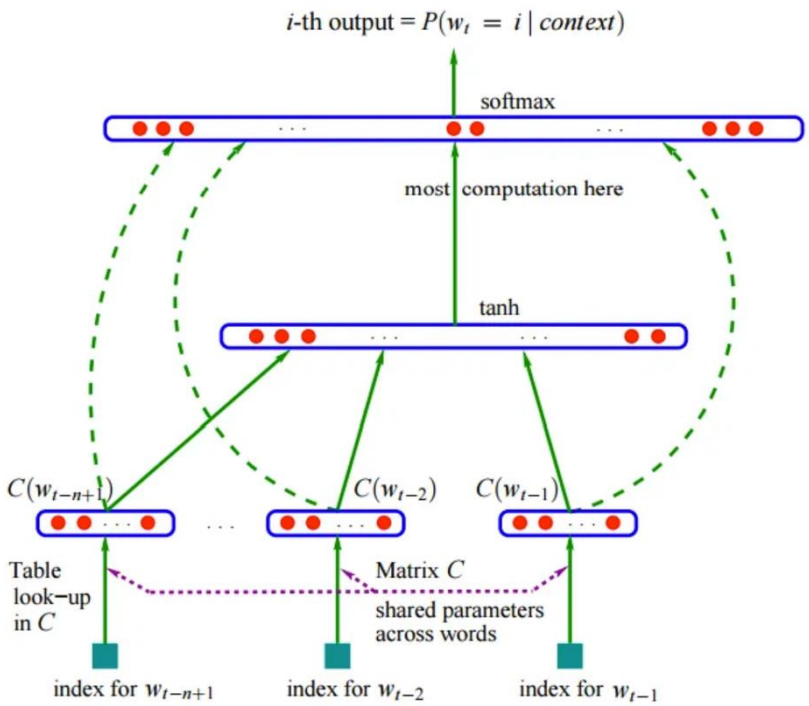

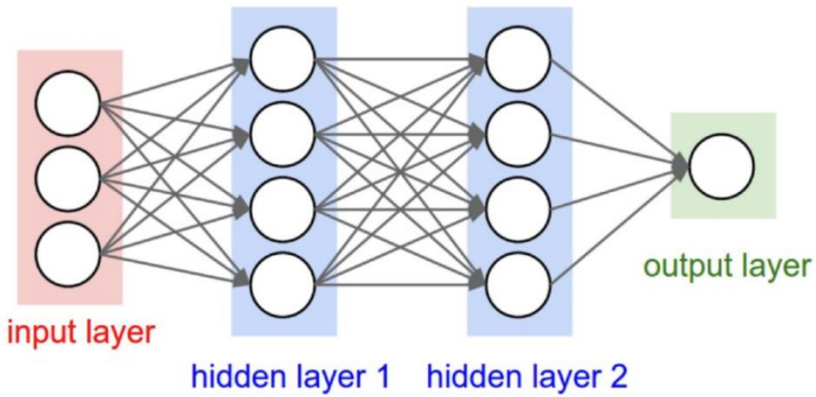

$$\mathbf{x} = [\mathbf{e}_{\text{the}}, \mathbf{e}_{\text{dogs}}, \mathbf{e}_{\text{are}}] \in \mathbb{R}^{3d}$$

(fixed-window size = 3)

The dogs are <u>barking</u>

the dogs in the neighborhood are ____

long context

Simple RNNs

- $h_0 \in \mathbb{R}^d$ is an initial state

$$\boxed{\mathbf{h}_t = f(\mathbf{h}_{t-1}, \mathbf{x}_t) \in \mathbb{R}^d}$$

- h_t: hidden states which store information from $\boldsymbol{x}_1$ to $\boldsymbol{x}_t$

- **Simple RNNs**:

$$\boxed{\mathbf{h}_t = g(\mathbf{W}\mathbf{h}_{t-1} + \mathbf{U}\mathbf{x}_t + \mathbf{b}) \in \mathbb{R}^d}$$

g: nonlinearity (e.g. tanh),

$\mathbf{W} \in \mathbb{R}^{d \times d}, \mathbf{U} \in \mathbb{R}^{d \times d_{in}}, \mathbf{b} \in \mathbb{R}^d$

Quiz: Activation Functions

- What's the main difference between sigmoid and tangent hyperbolic (tanh) functions as activation functions?

Simple RNNs

$$\mathbf{h}_t = g(\mathbf{W}\mathbf{h}_{t-1} + \mathbf{U}\mathbf{x}_t + \mathbf{b}) \in \mathbb{R}^d$$

- Key idea: apply the same weights $\boldsymbol{W}$ repeatedly

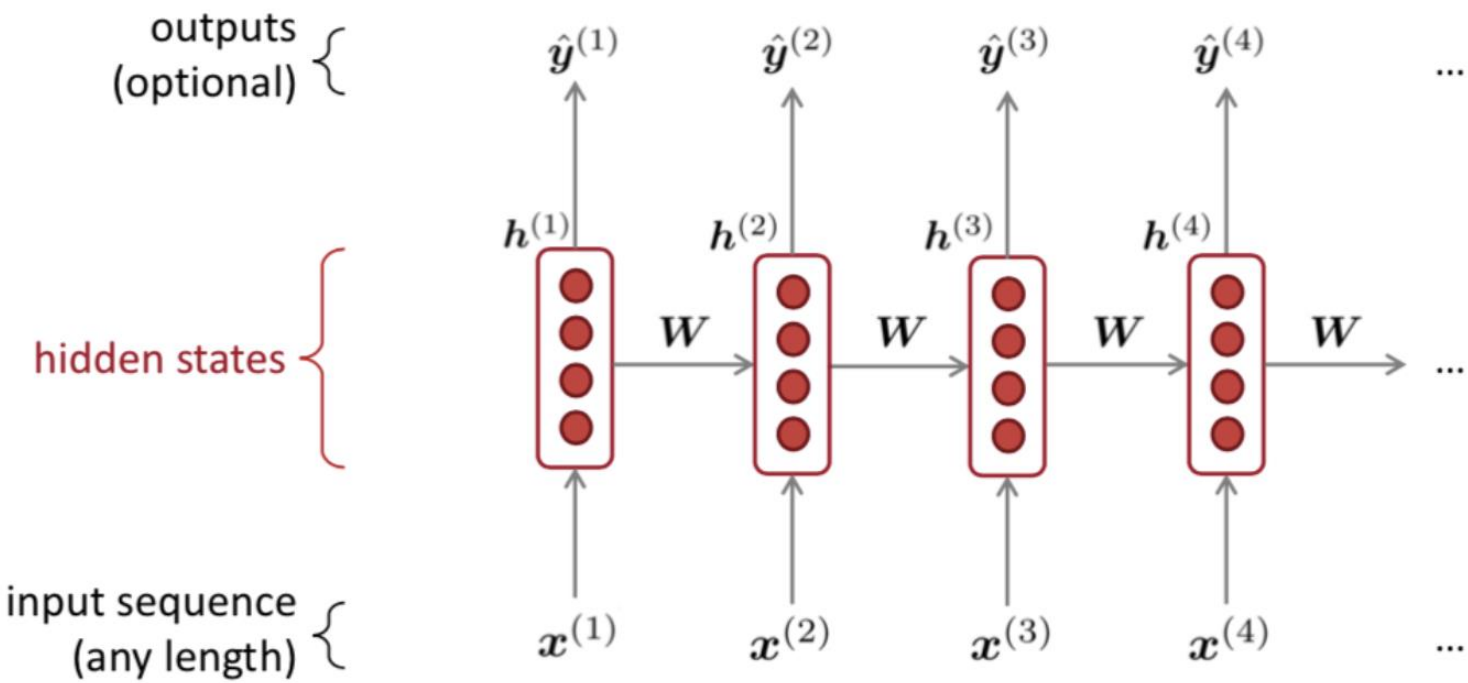

RNNs vs. Feedforward NNs

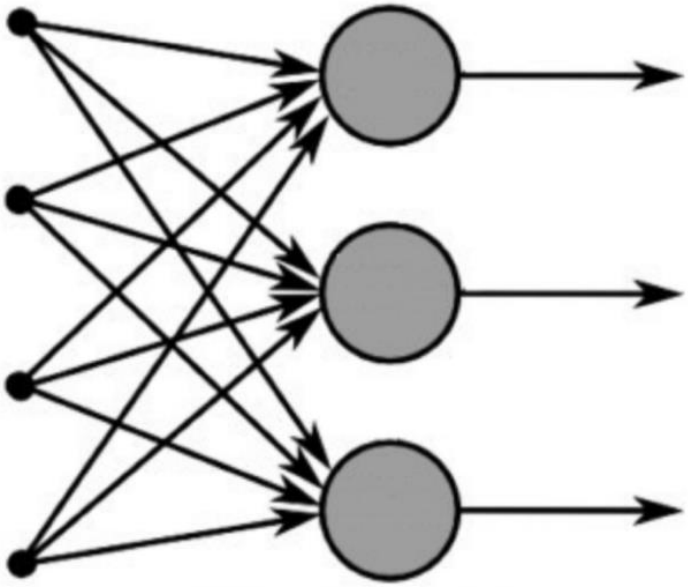

Feed-Forward Neural Network

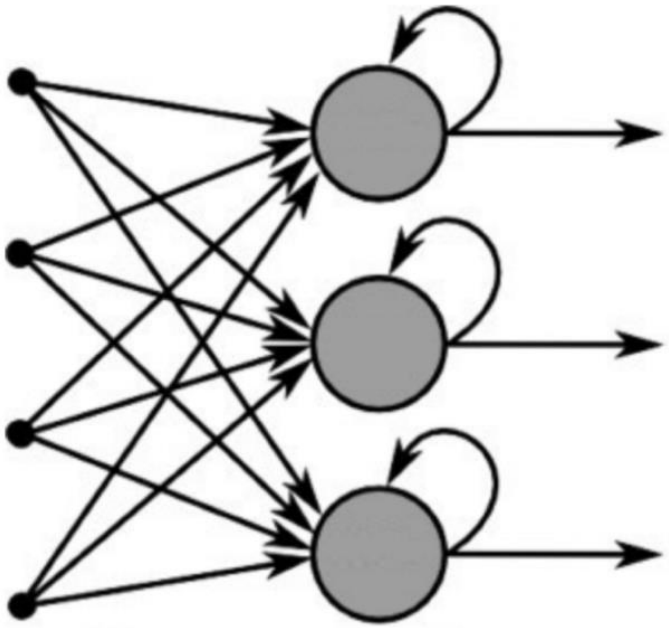

Recurrent Neural Network

Recurrent Neural Language Models (RNNLMs)

$$P(w_1, w_2, \ldots, w_n) = P(w_1) \times P(w_2 \mid w_1) \times P(w_3 \mid w_1, w_2) \times \ldots \times P(w_n \mid w_1, w_2, \ldots, w_{n-1})$$

$$= P(w_1 \mid \mathbf{h}_0) \times P(w_2 \mid \mathbf{h}_1) \times P(w_3 \mid \mathbf{h}_2) \times \ldots \times P(w_n \mid \mathbf{h}_{n-1})$$

- Denote $\hat{\boldsymbol{y}}_t = softmax(\boldsymbol{W}_o \boldsymbol{h}_t), W_o \in \mathbb{R}^{|V| \times d}$
- Cross-entropy loss:

$$L_{CE}(\hat{\mathbf{y}}_t, \mathbf{y}_t) = -\log \hat{\mathbf{y}}_t[w_{t+1}]$$

(the negative log probability the model assigns to the next word in the training sequence)

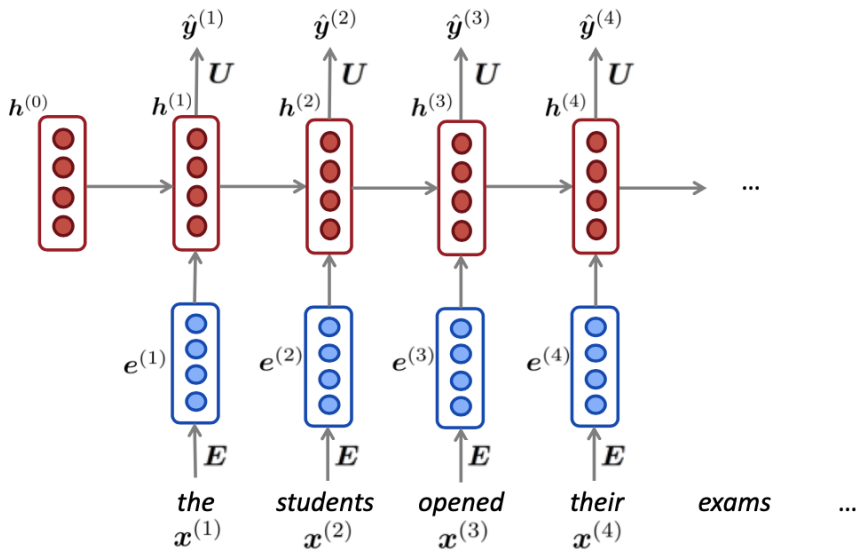

Training RNNLMs

- Back-propagation? Yes, but not so simple!

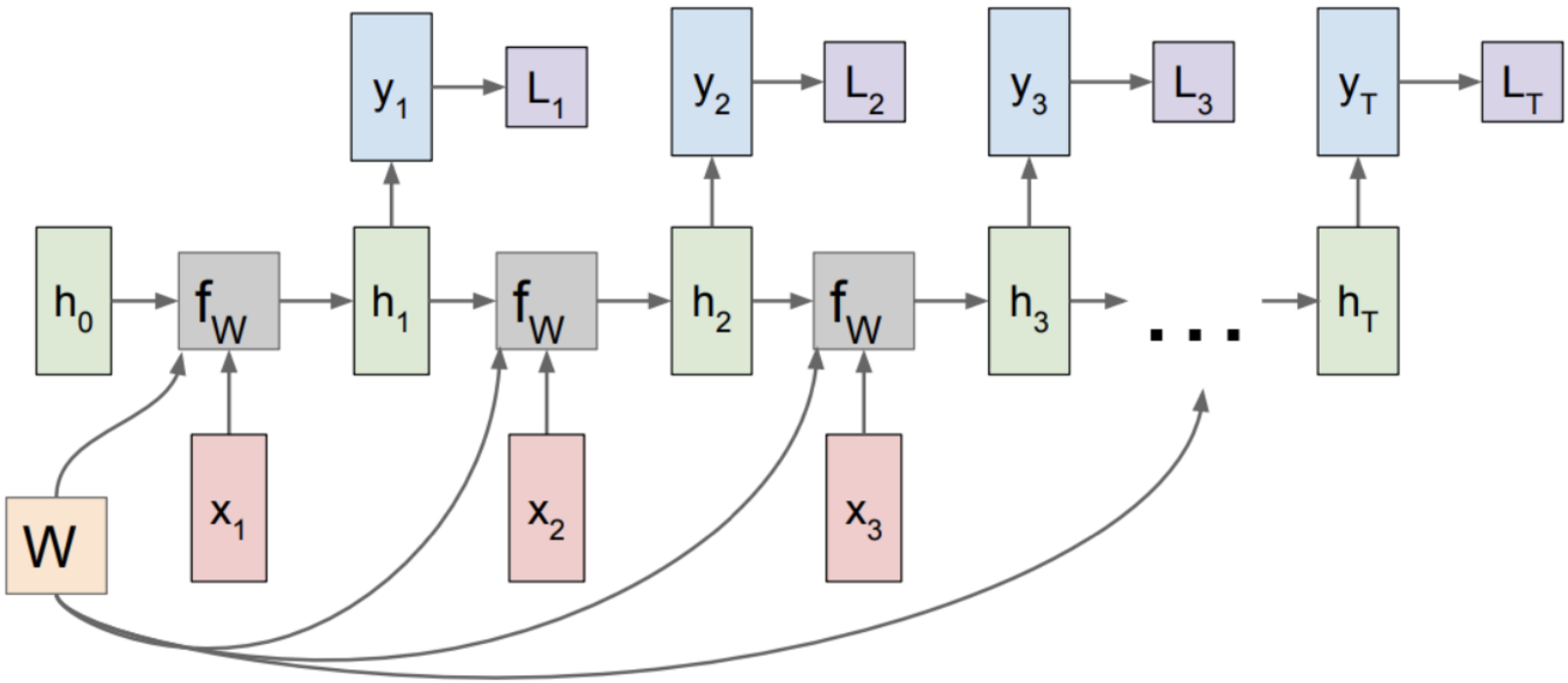

- The algorithm is called *Backpropagation Through Time* (BPTT)

Backpropagation through time

$$\mathbf{h}_1 = g(\mathbf{W}\mathbf{h}_0 + \mathbf{U}\mathbf{x}_1 + \mathbf{b})$$

$$\mathbf{h}_2 = g(\mathbf{W}\mathbf{h}_1 + \mathbf{U}\mathbf{x}_2 + \mathbf{b})$$

$$\mathbf{h}_3 = g(\mathbf{W}\mathbf{h}_2 + \mathbf{U}\mathbf{x}_3 + \mathbf{b})$$

$$L_3 = -\log \hat{\mathbf{y}}_3(w_4)$$

- You should know how to compute: $\dfrac{\partial L_3}{\partial \mathbf{h}_3}$

$$\frac{\partial L_3}{\partial \mathbf{W}} = \frac{\partial L_3}{\partial \mathbf{h}_3}\frac{\partial \mathbf{h}_3}{\partial \mathbf{W}} + \frac{\partial L_3}{\partial \mathbf{h}_3}\frac{\partial \mathbf{h}_3}{\partial \mathbf{h}_2}\frac{\partial \mathbf{h}_2}{\partial \mathbf{W}} + \frac{\partial L_3}{\partial \mathbf{h}_3}\frac{\partial \mathbf{h}_3}{\partial \mathbf{h}_2}\frac{\partial \mathbf{h}_2}{\partial \mathbf{h}_1}\frac{\partial \mathbf{h}_1}{\partial \mathbf{W}}$$

$$\boxed{\frac{\partial L}{\partial \mathbf{W}} = -\frac{1}{n}\sum_{t=1}^{n}\sum_{k=1}^{t}\frac{\partial L_t}{\partial \mathbf{h}_t}\left(\prod_{j=k+1}^{t}\frac{\partial \mathbf{h}_j}{\partial \mathbf{h}_{j-1}}\right)\frac{\partial \mathbf{h}_k}{\partial \mathbf{W}}}$$

Truncated backpropagation though time

- Backpropagation is very expensive if the input sequence is long.

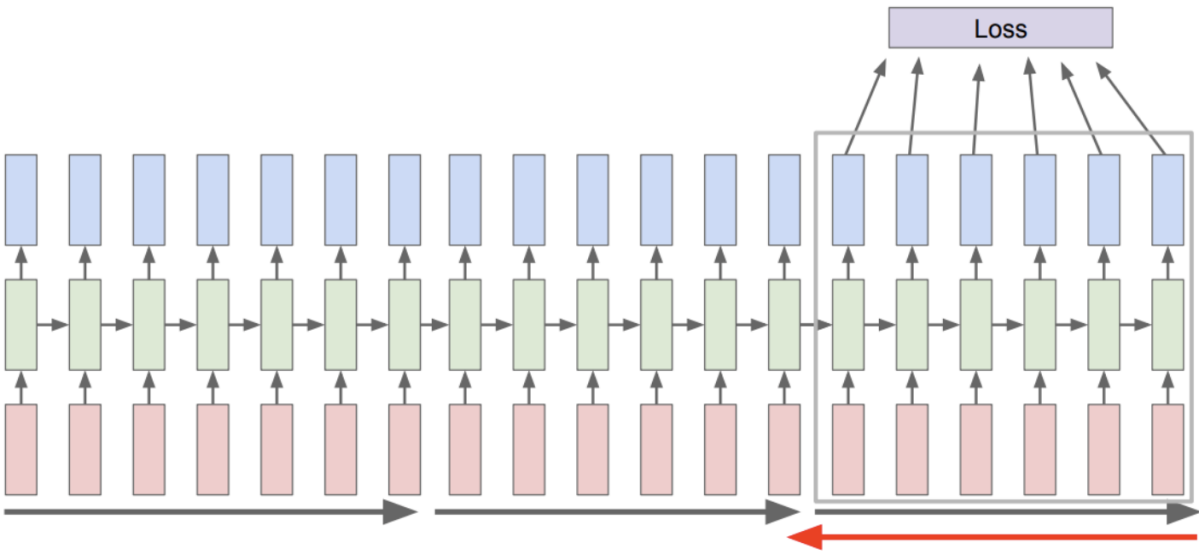

- Run forward and backward through chunks of sequence instead of the whole sequence
- Carry hidden state forward forever, but only backpropagate for some smaller number of steps

Quiz: Backpropagation Though Time

$$\frac{\partial L}{\partial \mathbf{W}} = -\frac{1}{n}\sum_{t=1}^{n}\sum_{k=1}^{t}\frac{\partial L_t}{\partial \mathbf{h}_t}\left(\prod_{j=k+1}^{t}\frac{\partial \mathbf{h}_j}{\partial \mathbf{h}_{j-1}}\right)\frac{\partial \mathbf{h}_k}{\partial \mathbf{W}}$$

- Suppose n is the input length, the backpropagation length is m, please re-derive the above formula for $\frac{\partial L}{\partial \mathbf{W}}$ while backpropagating only m steps.

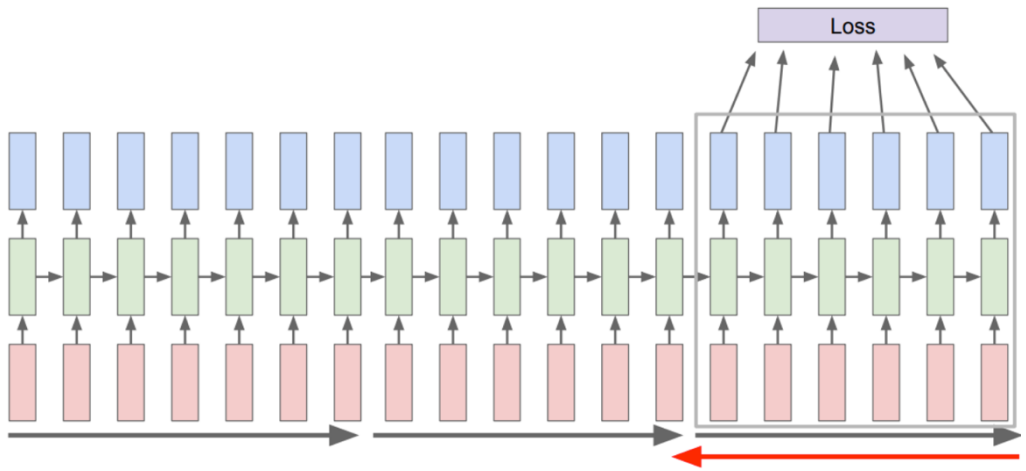

Progress on Language Models

- On the Penn Treebank (PTB) dataset:
- Metric: Perplexity

KN5: Kneser-Ney 5-gram

Model	Individual
KN5	141.2
KN5 + cache	125.7
Feedforward NNLM	140.2
Log-bilinear NNLM	144.5
Syntactical NNLM	131.3
Recurrent NNLM	124.7
RNN-LDA LM	113.7

(Mikolov and Zweig, 2012): Context dependent recurrent neural network language model

Progress on language models

- On the Penn Treebank (PTB) dataset:
- Metric: Perplexity

Model	#Param	Validation	Test
Mikolov & Zweig (2012) – RNN-LDA + KN-5 + cache	9M‡	-	92.0
Zaremba et al. (2014) – LSTM	20M	86.2	82.7
Gal & Ghahramani (2016) – Variational LSTM (MC)	20M	-	78.6
Kim et al. (2016) – CharCNN	19M	-	78.9
Merity et al. (2016) – Pointer Sentinel-LSTM	21M	72.4	70.9
Grave et al. (2016) – LSTM + continuous cache pointer†	-	-	72.1
Inan et al. (2016) – Tied Variational LSTM + augmented loss	24M	75.7	73.2
Zilly et al. (2016) – Variational RHN	23M	67.9	65.4
Zoph & Le (2016) – NAS Cell	25M	-	64.0
Melis et al. (2017) – 2-layer skip connection LSTM	24M	60.9	58.3
Merity et al. (2017) – AWD-LSTM w/o finetune	24M	60.7	58.8
Merity et al. (2017) – AWD-LSTM	24M	60.0	57.3
Ours – AWD-LSTM-MoS w/o finetune	22M	58.08	55.97
Ours – AWD-LSTM-MoS	22M	**56.54**	**54.44**
Merity et al. (2017) – AWD-LSTM + continuous cache pointer†	24M	53.9	52.8
Krause et al. (2017) – AWD-LSTM + dynamic evaluation†	24M	51.6	51.1
Ours – AWD-LSTM-MoS + dynamic evaluation†	22M	**48.33**	**47.69**

(Yang et al, 2018): Breaking the Softmax Bottleneck: A High-Rank RNN Language Model

Vanishing/Exploding Gradients

- Consider the gradient of L_t at step t, with respect to the hidden state $\mathbf{h}_k$ at some previous step k ($k < t$):

$$\frac{\partial L_t}{\partial \mathbf{h}_k} = \frac{\partial L_t}{\partial \mathbf{h}_t}\left(\prod_{t \geq j > k} \frac{\partial \mathbf{h}_j}{\partial \mathbf{h}_{j-1}}\right)$$
$$= \frac{\partial L_t}{\partial \mathbf{h}_t} \times \prod_{t \geq j > k}\left(diag\left(g'(\mathbf{W}\mathbf{h}_{j-1} + \mathbf{U}\mathbf{x}_j + \mathbf{b})\right)\mathbf{W}\right)$$

- (Pascanu et al, 2013) showed that if the largest eigenvalue of $\mathbf{W}$ is less than 1 for $g = tanh$, then the gradient will shrink exponentially. This problem is called **vanishing gradients**.
- In contrast, if the gradients are getting too large, it is called **exploding gradients**.

Why is exploding gradient a problem?

- When gradients are too large, we take very big steps in SGD, making the algorithm difficult to converge.
- Solution: Gradient clipping – if the norm of the gradient is beyond a threshold, scale it down before applying SGD update.

Algorithm 1 Pseudo-code for norm clipping

$\hat{\mathbf{g}} \leftarrow \frac{\partial \mathcal{E}}{\partial \theta}$
if $\|\hat{\mathbf{g}}\| \geq threshold$ **then**
  $\hat{\mathbf{g}} \leftarrow \frac{threshold}{\|\hat{\mathbf{g}}\|}\hat{\mathbf{g}}$
end if

Why is vanishing gradient a problem?

- If the gradients becomes vanishingly small over *long distances* (step k to step t), then we can't tell whether:
  - We don't need long-term dependencies, or
  - We have wrong parameters to capture the true dependency

    the dogs in the neighborhood are ___

    Still difficult to predict "barking"
- How to fix vanishing gradient problem?
  - **LSTMs: Long short-term memory networks**
  - GRUs: Gated recurrent units

Long Short-term Memory (LSTM)

- A type of RNN proposed by Hochreiter and Schmidhuber in 1997 as a solution to the vanishing gradients problem
- Work extremely well in practice
- **Basic idea**: turning multiplication into addition
- Use "gates" to control how much information to add/erase

$$\boxed{\mathbf{h}_t = f(\mathbf{h}_{t-1}, \mathbf{x}_t) \in \mathbb{R}^d}$$

At each timestep, there is a hidden state $\boldsymbol{h}_t \in \mathbb{R}^d$ and also a cell state $\boldsymbol{c}_t \in \mathbb{R}^d$

- $\boldsymbol{c}_t$ stores **long-term information**
- We write/erase $\boldsymbol{c}_t$ after each step
- We read $\boldsymbol{h}_t$ from $\boldsymbol{c}_t$

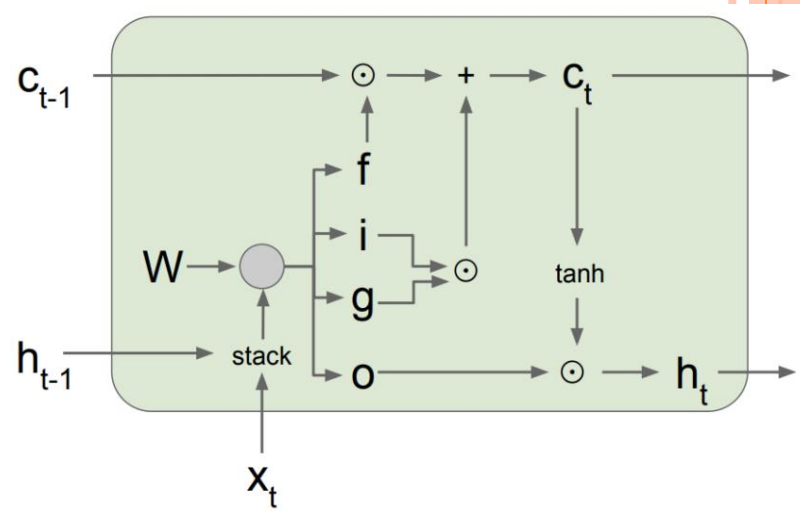

Long Short-term Memory (LSTM)

- There are three gates:
  - each is a *feed- forward layer*, followed by a *sigmoid activation function*, followed by an *element-wise multiplication* with the layer being gated
  - Note we use ⊙ and ⊗ interchangeably to denote element-wise multiplication

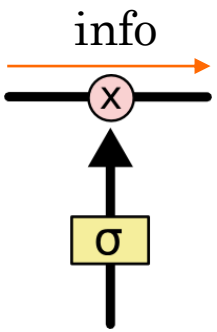

a typical gate

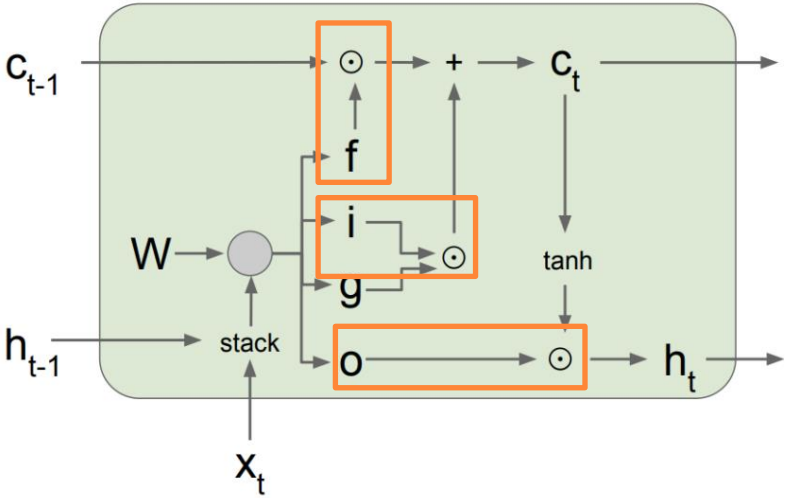

Long Short-term Memory (LSTM)

- forget gate (how much to erase)

$$\mathbf{f}_t = \sigma(\mathbf{W}^{(f)}\mathbf{h}_{t-1} + \mathbf{U}^{(f)}\mathbf{x}_t + \mathbf{b}^{(f)}) \in \mathbb{R}^d$$

- input gate (how much to write)

$$\mathbf{i}_t = \sigma(\mathbf{W}^{(i)}\mathbf{h}_{t-1} + \mathbf{U}^{(i)}\mathbf{x}_t + \mathbf{b}^{(i)}) \in \mathbb{R}^d$$

- output gate (how much to reveal)

$$\mathbf{o}_t = \sigma(\mathbf{W}^{(o)}\mathbf{h}_{t-1} + \mathbf{U}^{(o)}\mathbf{x}_t + \mathbf{b}^{(o)}) \in \mathbb{R}^d$$

- new cell values

$$\mathbf{g}_t = \tanh\left(\mathbf{W}^{(c)}\mathbf{h}_{t-1} + \mathbf{U}^{(c)}\mathbf{x}_t + \mathbf{b}^{(c)}\right) \in \mathbb{R}^d$$

- Final memory cell:

$$\mathbf{c}_t = \mathbf{f}_t \odot \mathbf{c}_{t-1} + \mathbf{i}_t \odot \mathbf{g}_t$$

- Final hidden cell: $\mathbf{h}_t = \mathbf{o}_t \odot \mathbf{c}_t$

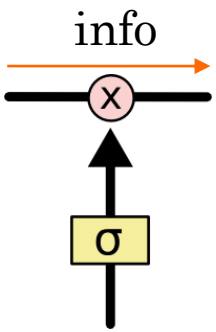

a typical gate

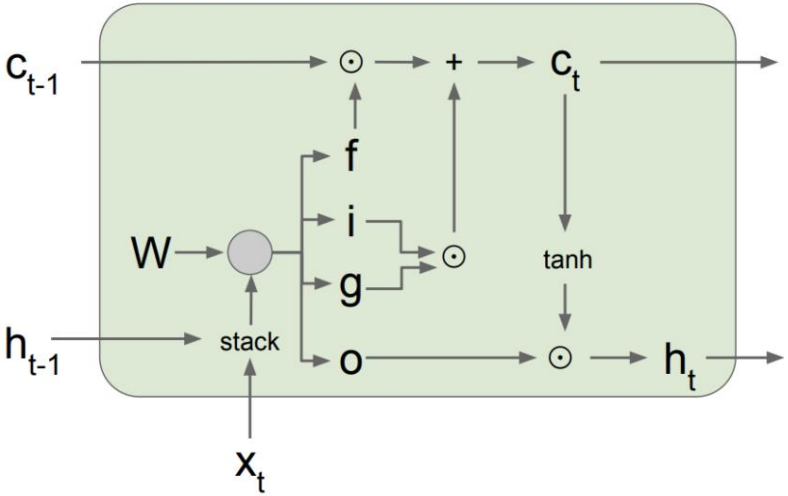

Long Short-term Memory (LSTM)

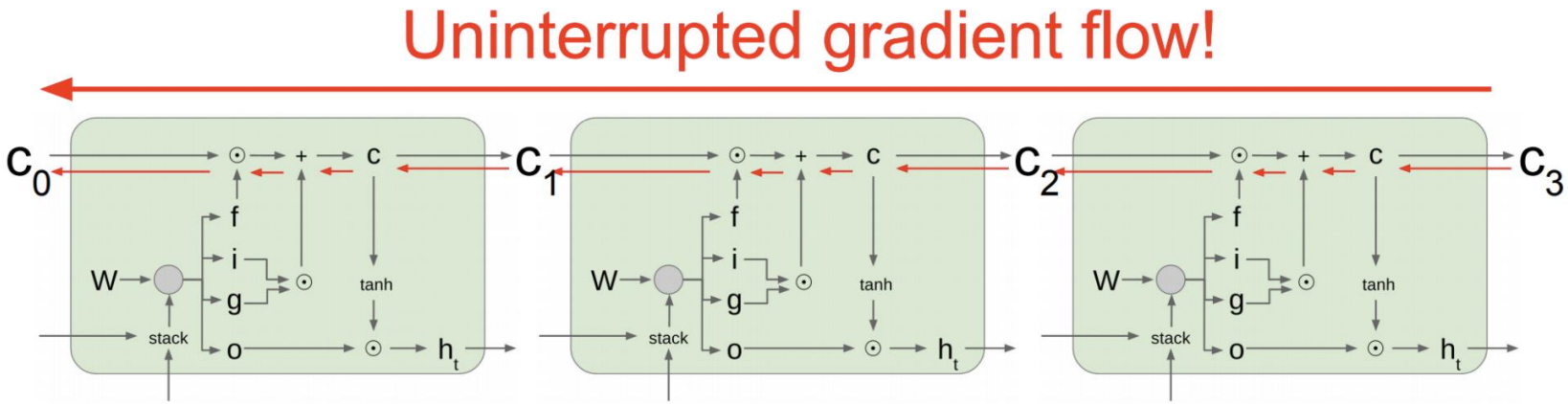

- LSTM doesn't guarantee there is no vanishing/exploding gradients.
- It does provide an easier way for models to learn long-distance dependencies.
- LSTM was first invented in 1997, but wasn't working until 2013-2015.

Is LSTM Architecture Optimal?

MUT1:

$$
\begin{aligned}
z &= \mathrm{sigm}(W_{\mathrm{xz}} x_t + b_{\mathrm{z}}) \\
r &= \mathrm{sigm}(W_{\mathrm{xr}} x_t + W_{\mathrm{hr}} h_t + b_{\mathrm{r}}) \\
h_{t+1} &= \tanh(W_{\mathrm{hh}}(r \odot h_t) + \tanh(x_t) + b_{\mathrm{h}}) \odot z \\
&+ h_t \odot (1 - z)
\end{aligned}
$$

MUT2:

$$
\begin{aligned}
z &= \mathrm{sigm}(W_{\mathrm{xz}} x_t + W_{\mathrm{hz}} h_t + b_{\mathrm{z}}) \\
r &= \mathrm{sigm}(x_t + W_{\mathrm{hr}} h_t + b_{\mathrm{r}}) \\
h_{t+1} &= \tanh(W_{\mathrm{hh}}(r \odot h_t) + W_{xh} x_t + b_{\mathrm{h}}) \odot z \\
&+ h_t \odot (1 - z)
\end{aligned}
$$

MUT3:

$$
\begin{aligned}
z &= \mathrm{sigm}(W_{\mathrm{xz}} x_t + W_{\mathrm{hz}} \tanh(h_t) + b_{\mathrm{z}}) \\
r &= \mathrm{sigm}(W_{\mathrm{xr}} x_t + W_{\mathrm{hr}} h_t + b_{\mathrm{r}}) \\
h_{t+1} &= \tanh(W_{\mathrm{hh}}(r \odot h_t) + W_{xh} x_t + b_{\mathrm{h}}) \odot z \\
&+ h_t \odot (1 - z)
\end{aligned}
$$

Arch.	Arith.	XML	PTB
Tanh	0.29493	0.32050	0.08782
LSTM	0.89228	0.42470	0.08912
LSTM-f	0.29292	0.23356	0.08808
LSTM-i	0.75109	0.41371	0.08662
LSTM-o	0.86747	0.42117	0.08933
LSTM-b	0.90163	0.44434	0.08952
GRU	0.89565	0.45963	0.09069
MUT1	**0.92135**	**0.47483**	0.08968
MUT2	0.89735	**0.47324**	0.09036
MUT3	0.90728	0.46478	**0.09161**

Next-step-prediction accuracies

Arch.	5M-tst	10M-v	20M-v	20M-tst
Tanh	4.811	4.729	4.635	4.582 (97.7)
LSTM	4.699	4.511	4.437	4.399 (81.4)
LSTM-f	4.785	4.752	4.658	4.606 (100.8)
LSTM-i	4.755	4.558	4.480	4.444 (85.1)
LSTM-o	4.708	4.496	4.447	4.411 (82.3)
LSTM-b	4.698	4.437	4.423	**4.380 (79.83)**
GRU	4.684	4.554	4.559	4.519 (91.7)
MUT1	4.699	4.605	4.594	4.550 (94.6)
MUT2	4.707	4.539	4.538	4.503 (90.2)
MUT3	4.692	4.523	4.530	4.494 (89.47)

Perplexity on PTB

MUTx are "mutated variants" of LSTM architectures found by Genetic Algorithms

Reference to LSTM

- Section 9.5 of Jurafsky and Martin
- https://colah.github.io/posts/2015-08-Understanding-LSTMs/

Overview

- What is a recurrent neural network (RNN)?
- Simple RNNs
- Backpropagation through time
- Long short-term memory networks (LSTMs)
- Applications
- Variants: Stacked RNNs, Bidirectional RNNs

Application: Text Generation

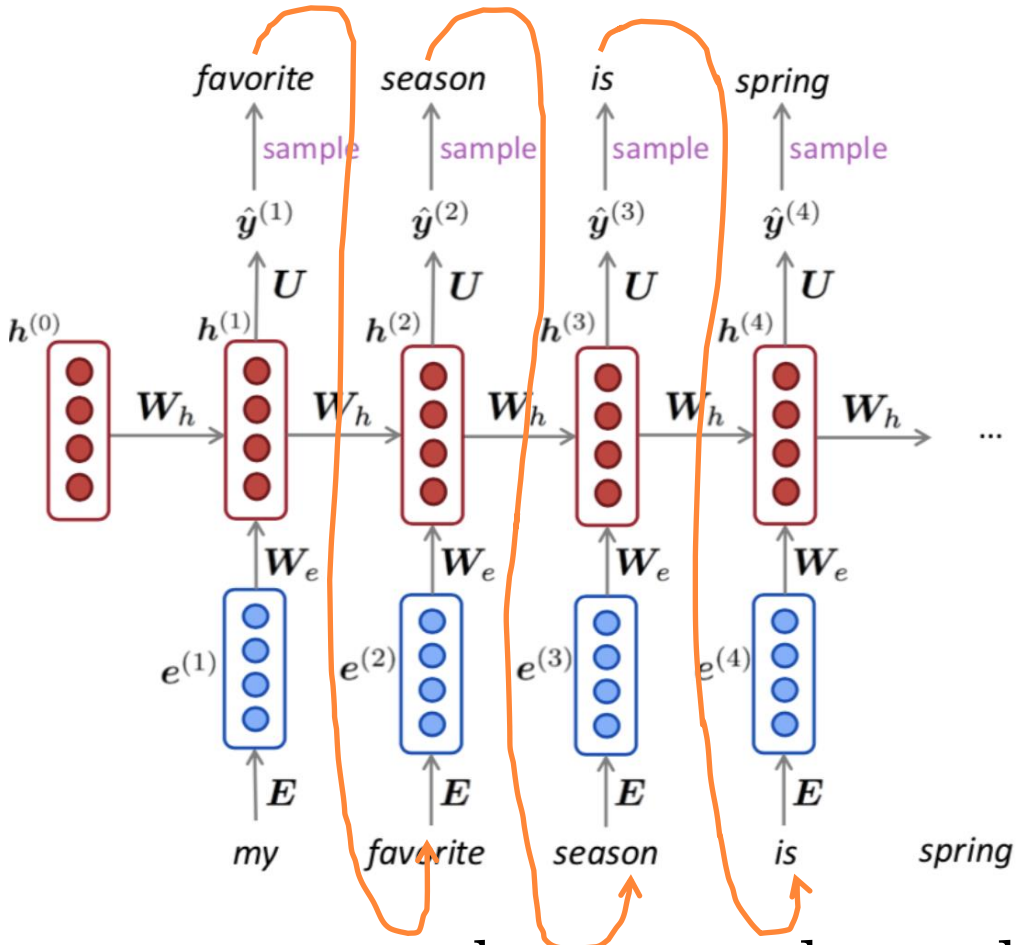

- You can generate text by repeated sampling
- Sampled output is the next step's input

Fun with RNNs

Obama speeches

Good afternoon. God bless you.

The United States will step up to the cost of a new challenges of the American people that will share the fact that we created the problem. They were attacked and so that they have to say that all the task of the final days of war that I will not be able to get this done. The promise of the men and women who were still going to take out the fact that the American people have fought to make sure that they have to be able to protect our part. It was a chance to stand together to completely look for the commitment to borrow from the American people. And the fact is the men and women in uniform and the millions of our country with the law system that we should be a strong stretcks of the forces that we can afford to increase our spirit of the American people and the leadership of our country who are on the Internet of American lives.

Thank you very much. God bless you, and God bless the United States of America.

Latex generation

```
\begin{proof}
We may assume that $\mathcal{I}$ is an abelian sheaf on $\mathcal{C}$.
\item Given a morphism $\Delta : \mathcal{F} \to \mathcal{I}$
is an injective and let $\mathfrak q$ be an abelian sheaf on $X$.
Let $\mathcal{F}$ be a fibered complex. Let $\mathcal{F}$ be a category.
\begin{enumerate}
\item \hyperref[setain-construction-phantom]{Lemma}
\label{lemma-characterize-quasi-finite}
Let $\mathcal{F}$ be an abelian quasi-coherent sheaf on $\mathcal{C}$.
Let $\mathcal{F}$ be a coherent $\mathcal{O}_X$-module. Then
$\mathcal{F}$ is an abelian catenary over $\mathcal{C}$.
\item The following are equivalent
\begin{enumerate}
\item $\mathcal{F}$ is an $\mathcal{O}_X$-module.
\end{lemma}
```

Andrej Karpathy 2015: “The Unreasonable Effectiveness of Recurrent Neural Networks”

Application: Sequence Tagging

- Input: a sequence of n words: $x_1, \ldots, x_n$.
- Output: $y_1, \ldots, y_n, y_i \in \{1, \ldots, C\}$

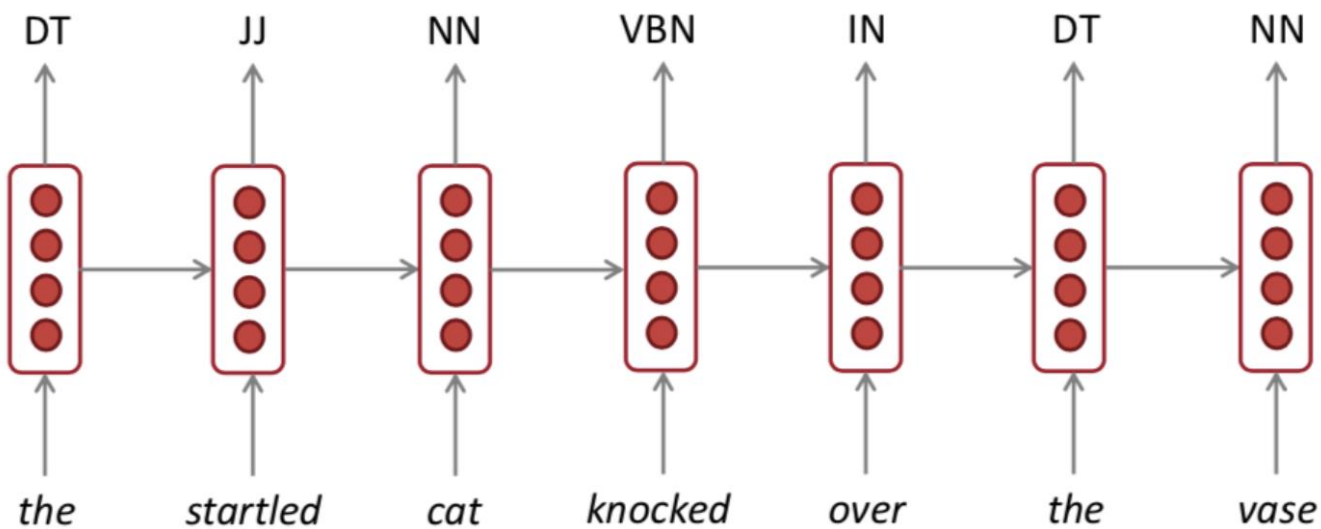

$$P(y_i = k) = softmax_k(\mathbf{W}_o \mathbf{h}_i)$$

$$L = -\frac{1}{n}\sum_{i=1}^{n} \log P(y_i = k)$$

Application: Text Classification

- Input: a sequence of n words: $x_1, \ldots, x_n$.
- Output: $y \in \{1, \ldots, C\}$

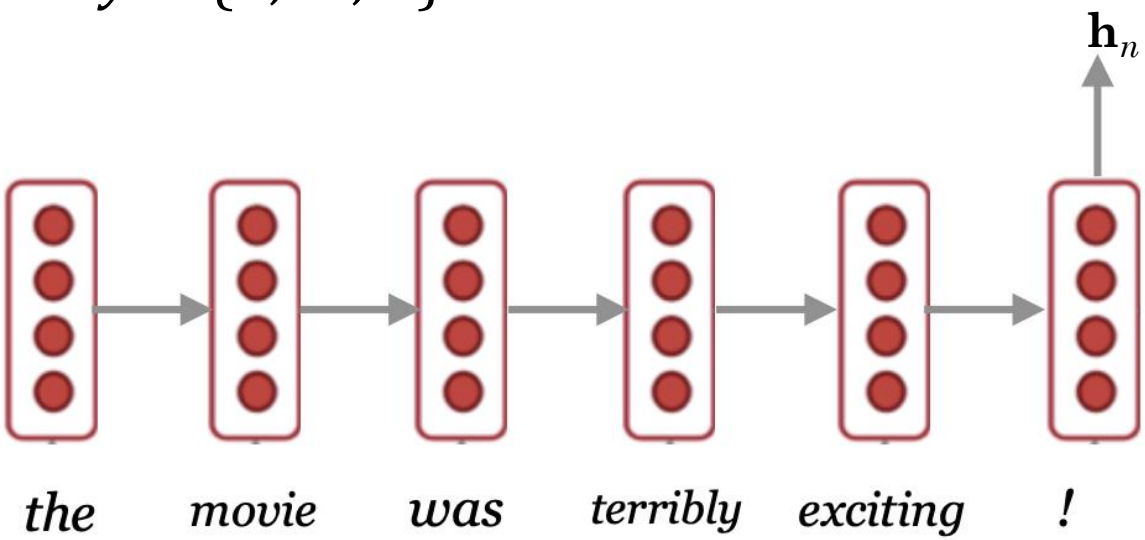

$$P(y = k) = softmax_k(\mathbf{W}_o \mathbf{h}_n)$$

Multi-layer RNNs

- RNNs are already "deep" on one dimension (unroll over time steps)
- We can also make them "deep" in another dimension by applying multiple RNNs
- Multi-layer RNNs are also called stacked RNNs.

Multi-Layer RNNs

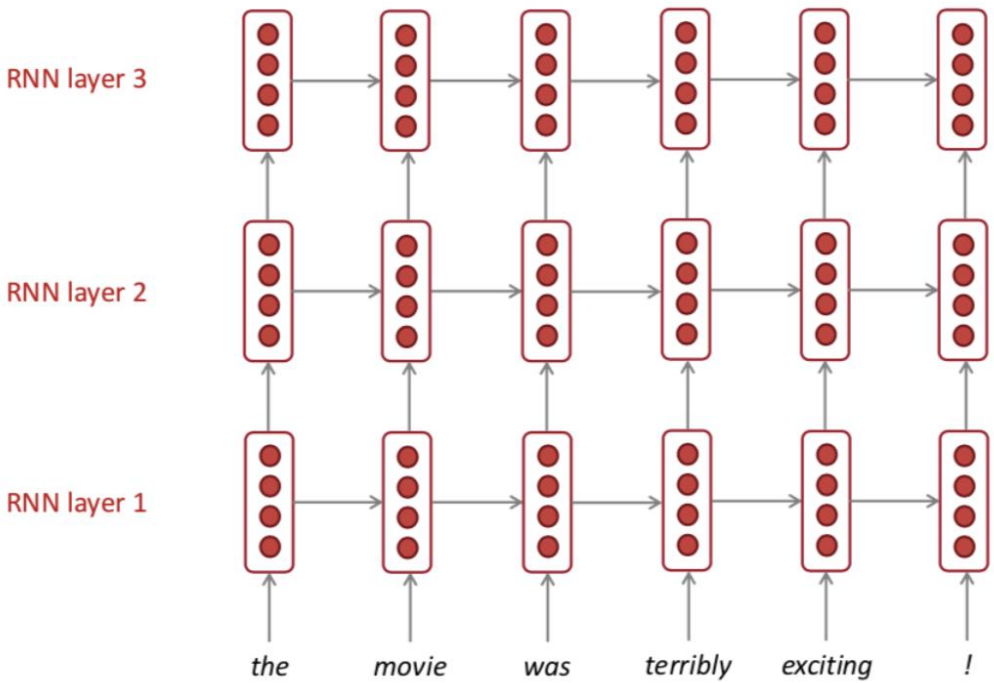

The hidden states from RNN layer i are the inputs to layer i+1.

- In practice, using 2 to 4 layers is common (usually better than 1 layer)
- Transformer-based networks can be up to 24 layers with lots of skip-connections.

Bidirectional RNNs

- Bidirectionality is important in language modeling:

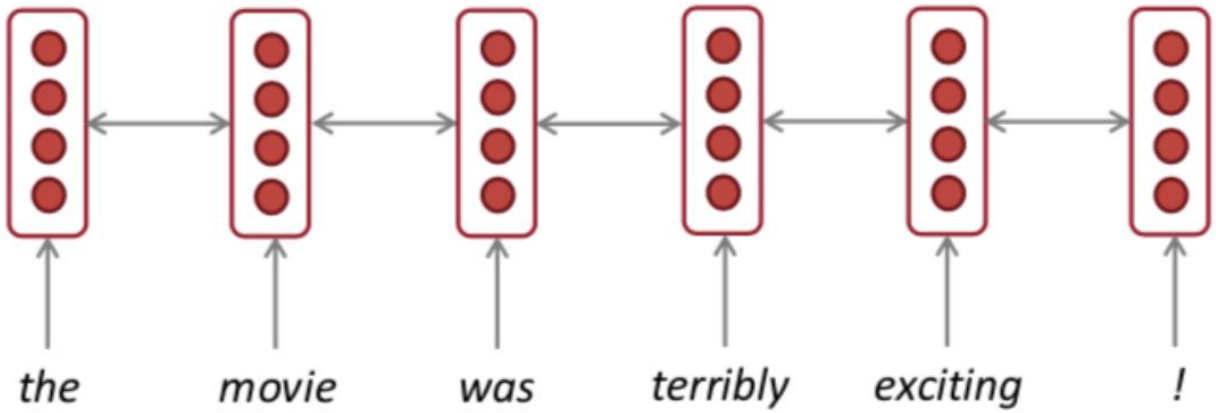

"terribly": left context: "the movie was"
right context: "exciting !"

Bidirectional RNNs

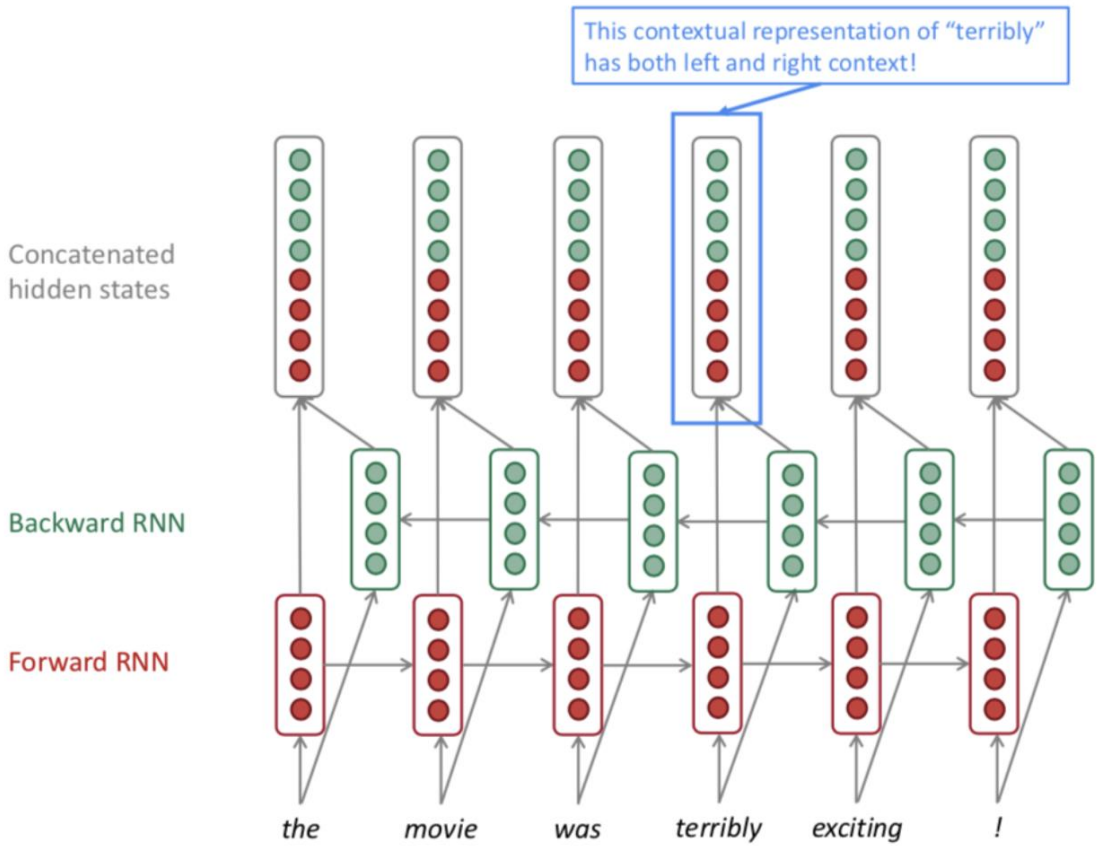

$$\boxed{\mathbf{h}_t = f(\mathbf{h}_{t-1}, \mathbf{x}_t) \in \mathbb{R}^d}$$

$$\overrightarrow{\mathbf{h}}_t = f_1(\overrightarrow{\mathbf{h}}_{t-1}, \mathbf{x}_t), t = 1,2,\ldots n$$

$$\overleftarrow{\mathbf{h}}_t = f_2(\overleftarrow{\mathbf{h}}_{t+1}, \mathbf{x}_t), t = n, n-1,\ldots 1$$

$$\mathbf{h}_t = [\overleftarrow{\mathbf{h}}_t, \overrightarrow{\mathbf{h}}_t] \in \mathbb{R}^{2d}$$

Birectional RNNs

- Sequence tagging: Yes!
- Text classification: Yes! With slight modifications (two ways below).

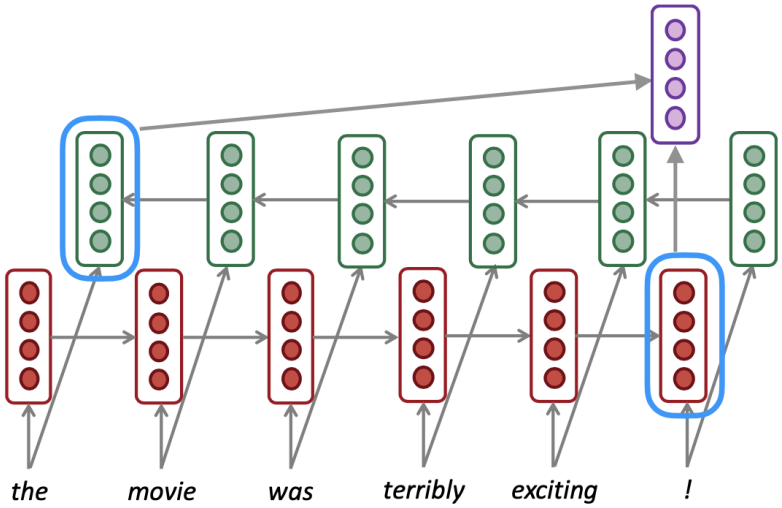

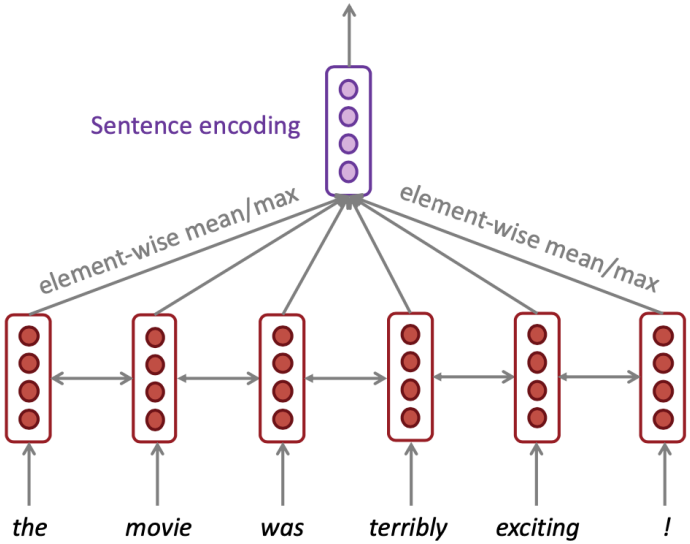

- Text generation: No.
- Quiz: Why can't we do text generation using bi-RNN?