SYNTHESIZER

Original design: MFOS Alien Screamer Noise Box
Author: Ray Wilson
https://musicfromouterspace.com/

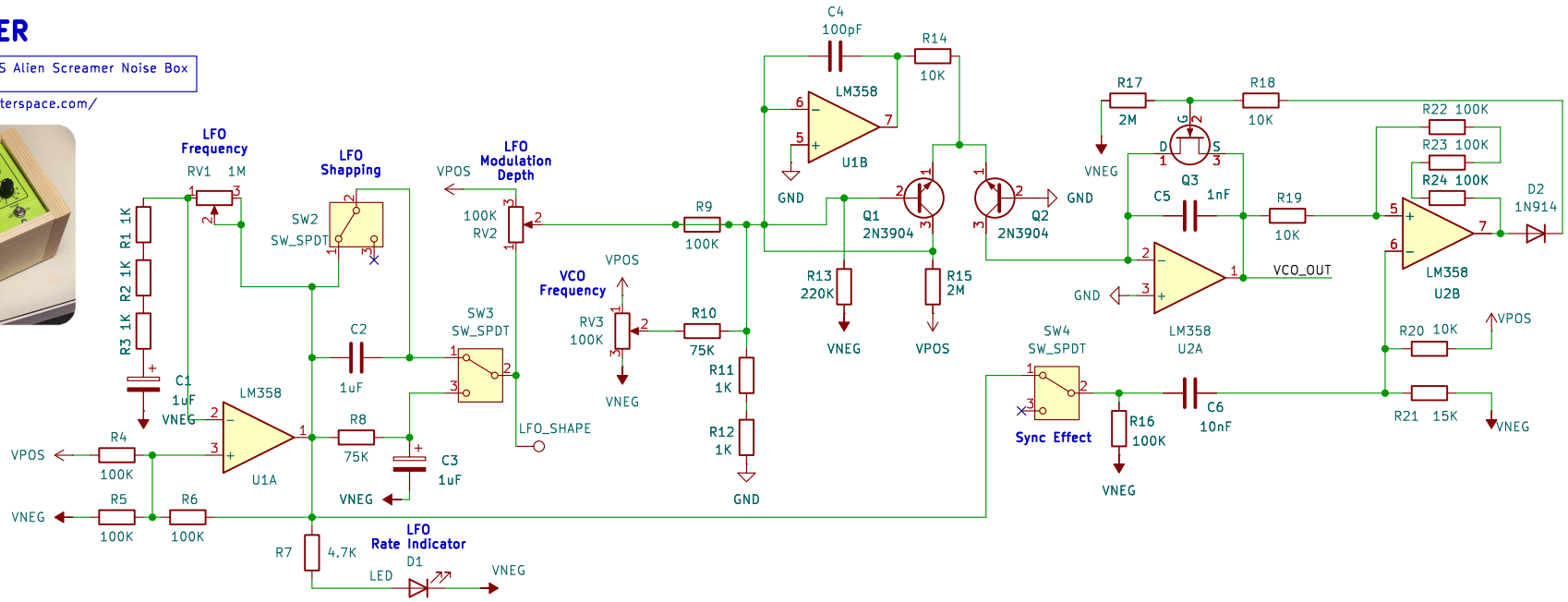

POWER SUPPLY

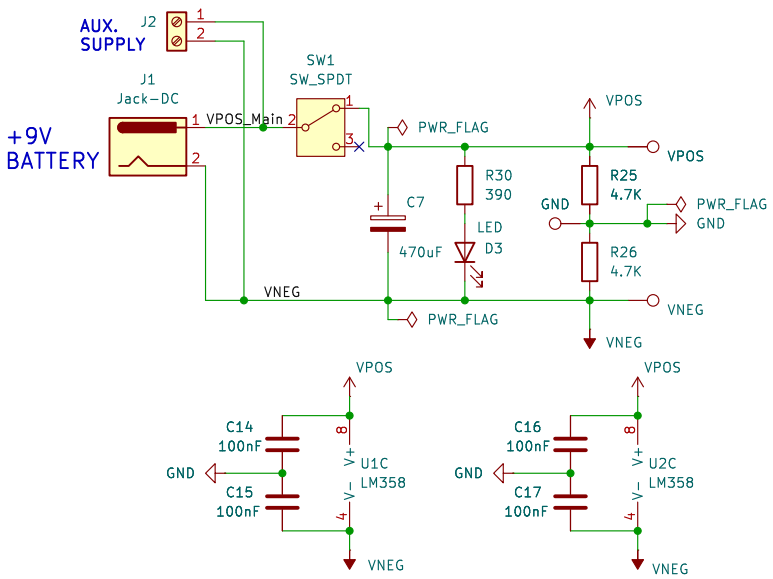

MECHANICAL

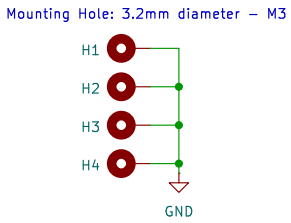

AUDIO OUTPUT (AMPLIFIER STAGE)

2 to 3 inch 8 ohm 250mW to 1W general purpose speaker. Higher ohm speaker is OK up to 32 ohms.

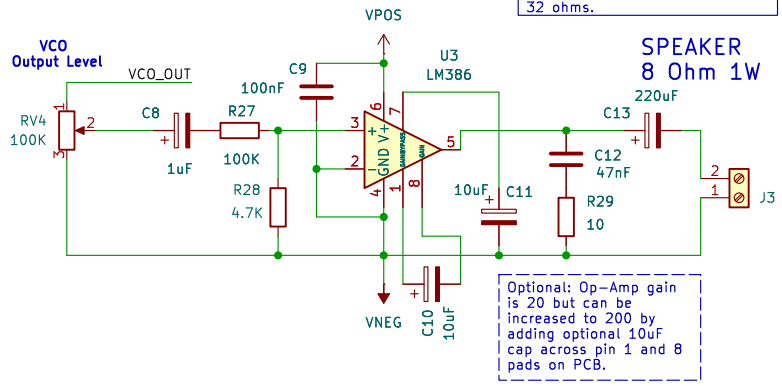

Author: Kepa ODRIOZOLA

Sheet: /
File: AlienScreamer_Prototype_V1.kicad_sch

Title: MFOS Alien Screamer Noise Box (V1.0)

Size: A4	Date:	Rev:
KiCad E.D.A. 9.0.4		Id: 1/1