GETTING STARTED

FLIR BLACKFLY® S
USB3 Vision

Will your system support the camera?

Recommended System Configuration:

- **OS**—Window 7, Windows 8, or Windows 10 (32- or 64-bit)
- **CPU**—Intel i5
- **RAM**—4 GB
- **Ports**—Intel USB3 host controller
- **Software**—Microsoft Visual Studio 2010, Visual Studio 2013, or Visual Studio 2015 (to run and compile example code)

See Technical Application Note 10359 for information on recommended system components for USB 3.0.

Do you have a downloads account?

The downloads page has many resources to help you operate your camera effectively, including:

- Spinnaker® SDK software, including drivers (required for installation)
- Firmware updates and release notes
- Dimensional drawings and CAD models
- Documentation

To access the software and firmware downloads you must have a downloads account.

1. Go to our website: www.flir.com/iis.
2. In the upper right corner, click **Register**.
3. Complete the form, then click **Register**.

After you submit your registration, you will receive an email with instructions on how to activate your account.

Do you have all the parts you need?

To install your camera you will need the following components:

- USB 3.0 cable
- 6-pin GPIO cable
- C-mount Lens
- Tripod adapter (optional)
- Interface card

FLIR sells a number of the additional parts required for installation. To purchase, visit the Accessories page.

Camera Care

To clean the imaging surface of your camera, follow the steps outlined in Knowledge Base Article 10243.

Extended exposure to bright sunlight, rain, dusty environments, etc. may cause problems with the electronics and optics of the system.

Avoid excessive shaking, dropping, or mishandling of the device.

Warning! Do not open the camera housing. Doing so voids the Hardware Warranty.

Avoid electrostatic charging.

The outer case of the camera can become hot to the touch when running. This is expected behavior.

Installing Your Interface Card and Software

1. Install your Interface Card

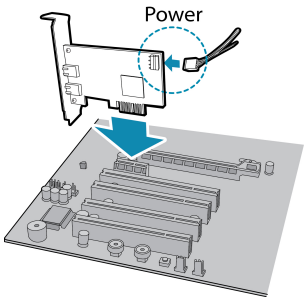

Ensure the card is installed per the manufacturer's instructions.

Connect the internal IDE or SATA power connector on the card to the computer power supply.

Alternatively, use your PC's built-in host controller, if equipped.

Open the Windows Device Manager. Ensure the card is properly installed. USB3 cards appear under **Universal Serial Bus Controllers**. An exclamation point (!) next to the card indicates the driver has not yet been installed.

2. Install the Spinnaker® Software

Note: For existing users who already have Spinnaker installed, we recommend ensuring you have the latest version for optimal performance of your camera. If you do not need to install Spinnaker, use SpinView to install and enable drivers for your card.

a. Login to the Downloads page.
b. Select your **Product Family**, **Camera Model** and **Operating System** from the drop-down lists.
c. Click on the **Software** search results to expand the list.
d. Click the appropriate link to begin the download and installation.

After the download is complete, the Spinnaker setup wizard begins. If the wizard does not start automatically, double-click the .exe file to open it. Follow the steps in each setup dialog.

Using the Spinnaker® SDK

You can monitor or control features of the camera through Spinnaker API examples provided in the Spinnaker SDK, or through the SpinView camera evaluation application. A *Programmer's Guide and API Reference* is included in the installation.

1/13/2017
Names and marks appearing on the products herein are either registered trademarks or trademarks of FLIR Systems, Inc. and/or its subsidiaries.
© 2015-2017 FLIR Integrated Imaging Solutions Inc. All rights reserved.

FLIR® | The World's Sixth Sense®

Installing Your Blackfly S USB3

1. Install the Tripod Mounting Bracket (optional)

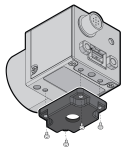

The ASA and ISO-compliant tripod mounting bracket attaches to the camera using the included screws.

2. Attach a Lens

Unscrew the dust cap from the lens holder to install a lens.

3. Connect the interface Card and Cable to the Camera

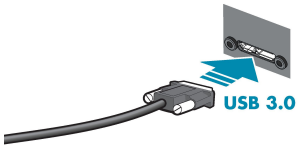

Plug the interface cable into the host controller card and the camera. The cable jack screws can be used for a secure connection.

When the camera is first connected, the operating system automatically installs the camera driver. Camera drivers are available with the Spinnaker SDK installation.

4. Plug in the GPIO connector if required

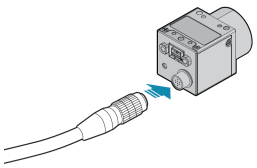

GPIO can be used for power, trigger, and strobe.

5. Confirm Successful Installation

Run the SpinView application: **Start->All Programs-> Point Grey Spinnaker->SpinView**
The SpinView application can be used to test the camera's image acquisition capabilities.

Changes to your camera's installation configuration can be made using the SpinView application.

Camera Interface

USB 3.0 Connector

The camera is equipped with a USB 3.0 Micro-B connector that is used for power, data transmission, and camera control. For more detailed information, consult the USB 3.0 specification available from http://www.usb.org/developers/docs/.

General Purpose I/O Connector

The camera is equipped with a 6-pin GPIO connector on the back of the case; refer to the diagram for wire color-coding.

Diagram	Color [1]	Pin	Line	Function	Description
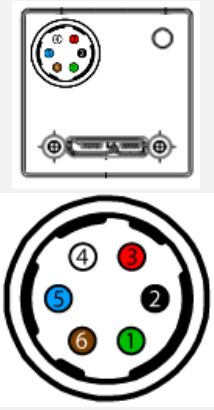	Green	1[2]	3	V_{AUX}	Auxiliary Input Voltage (DC)
				GPI	Non-isolated Input
	Black	2	0	OPTOIN	Opto-isolated Input
	Red	3[2]	2	VOUT	Camera Power Output
				GPIO[3]	Non-isolated Input/Ouput
	White	4	1	OPTOOUT [3]	Opto-isolated Output
	Blue	5	N/A	Opto GND	Opto-isolated Ground
	Brown	6	N/A	GND	Camera Power Ground

1—GPIO cable assembly wire colors
2—Dual function pin
3—Open drain output, requires pullup resistor

Status Indicator LED

LED	USB
No Light	No power or LED is in inactive state or LED is in error status state with no error
Blinking Green (1 blink)	USB1
Blinking Green (2 blinks)	USB2
Blinking Green (3 blinks)	USB3
Solid Green	Acquisition Started
Rapid Flashing Green	Firmware update in progress
Flashing Green and Red	General Error

For More Information

Our online Knowledge Base addresses many questions.

For information about...	See...
Your camera's settings and capabilities	Technical Reference
Spinnaker® SDK	API Reference / Programmer's Guide
Accessing customer downloads	Knowledge Base Article 10142
Selecting a lens	Knowledge Base Article 10269
Recommended USB 3.0 System Components	Technical Application Note 10359
Using USB 3.0 and Linux	Technical Application Note 10685
Setting up multiple USB 3.0 cameras	Technical Application Note 10350
Using Third-party Applications	Software Partners page

Contacting FLIR

For general questions and sales inquiries contact us at mv-sales@flir.com.

For technical support contact us at www.ptgrey.com/support/ticket/.

www.flir.com/iis

1/13/2017
Names and marks appearing on the products herein are either registered trademarks or trademarks of FLIR Systems, Inc. and/or its subsidiaries.
© 2015-2017 FLIR Integrated Imaging Solutions Inc. All rights reserved.

FLIR® | The World's Sixth Sense®