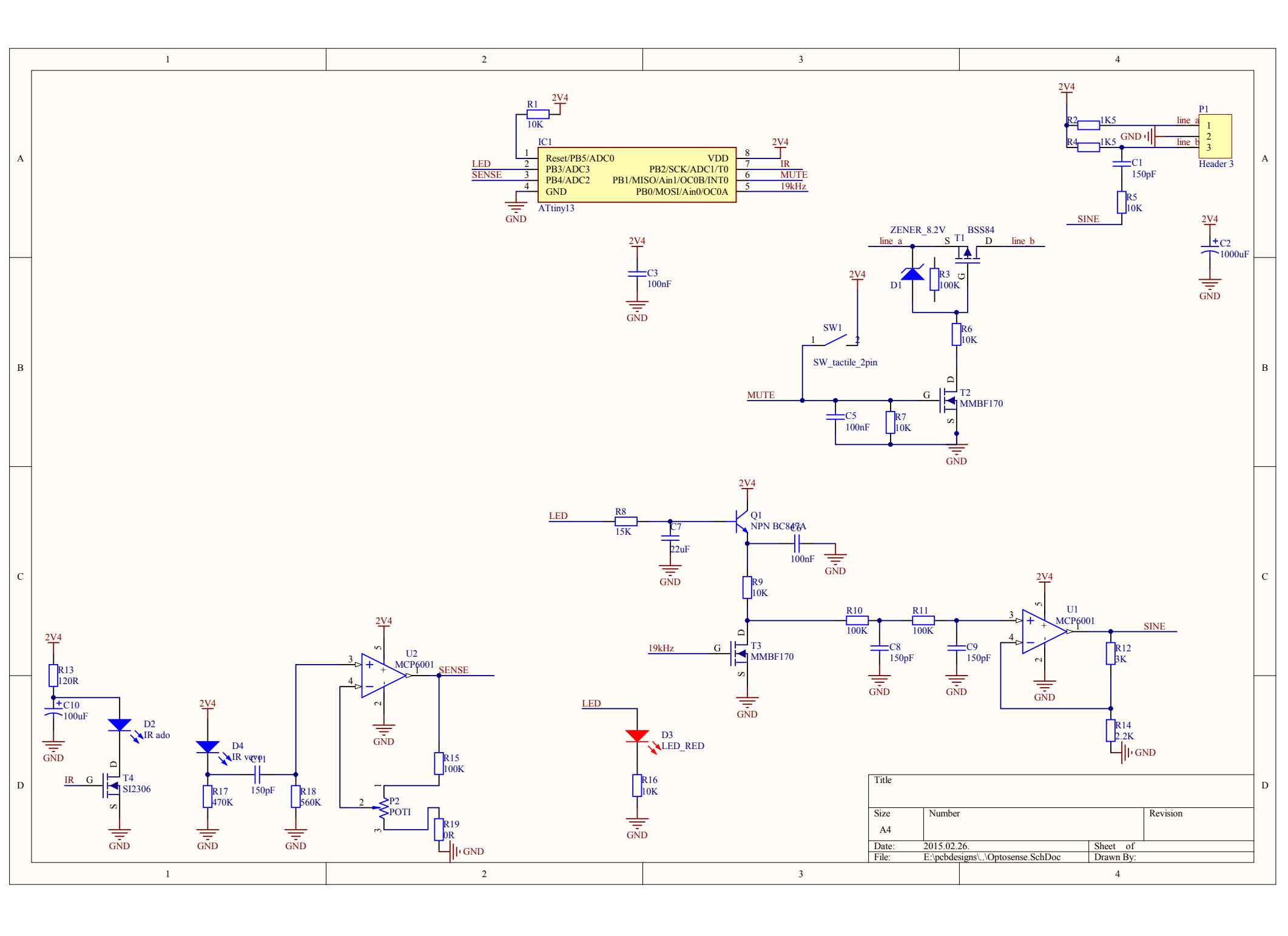
R1
10K
2V4
IC1
LED
SENSE
Reset/PB5/ADC0
PB3/ADC3
PB4/ADC2
GND
VDD
PB2/SCK/ADC1/T0
PB1/MISO/Ain1/OC0B/INT0
PB0/MOSI/Ain0/OC0A
IR
MUTE
19kHz
ATtiny13
P1
Header 3
line_a
line_b
R2
1K5
R4
1K5
C1
150pF
R5
10K
SINE
C2
1000uF
C3
100nF
ZENER_8.2V
BSS84
T1
D1
R3
100K
R6
10K
SW1
SW_tactile_2pin
T2
MMBF170
C5
100nF
R7
10K
R8
15K
C7
22uF
Q1
NPN BC847A
C6
100nF
R9
10K
R10
100K
R11
100K
C8
150pF
C9
150pF
T3
MMBF170
U1
MCP6001
R12
3K
R14
2.2K
R13
120R
C10
100uF
D2
IR ado
T4
SI2306
D4
IR vevo
C11
150pF
R17
470K
R18
560K
U2
MCP6001
R15
100K
P2
POTI
R19
0R
D3
LED_RED
R16
10K
Title
Size
A4
Number
Revision
Date:
2015.02.26.
Sheet of
File:
E:\pcbdesigns\..\Optosense.SchDoc
Drawn By:

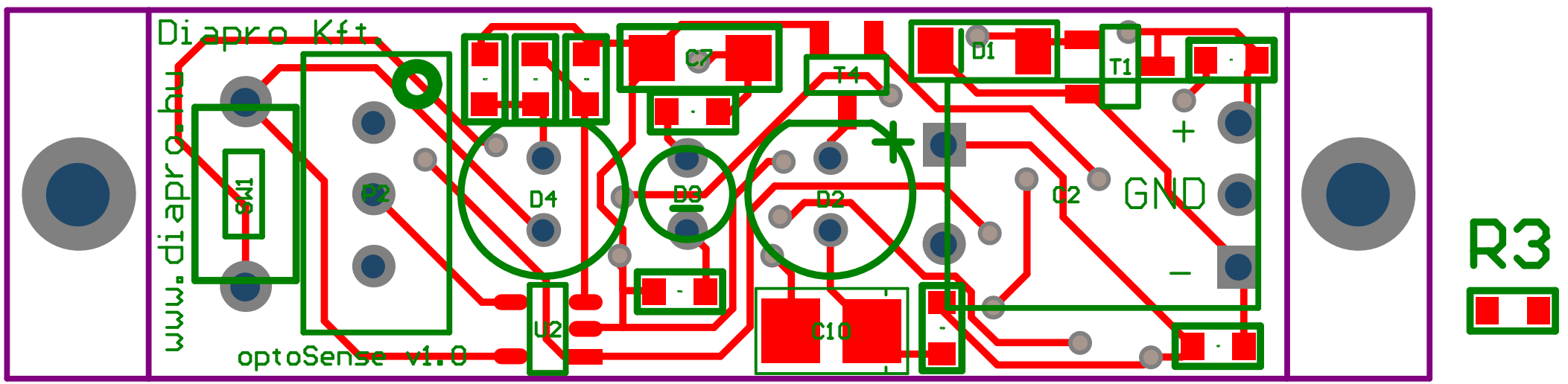
Diapro Kft.
www.diapro.hu
optoSense v1.0
SW1
P2
D4
D3
D2
C7
T4
D1
T1
C2
GND
+
−
U2
C10
R3

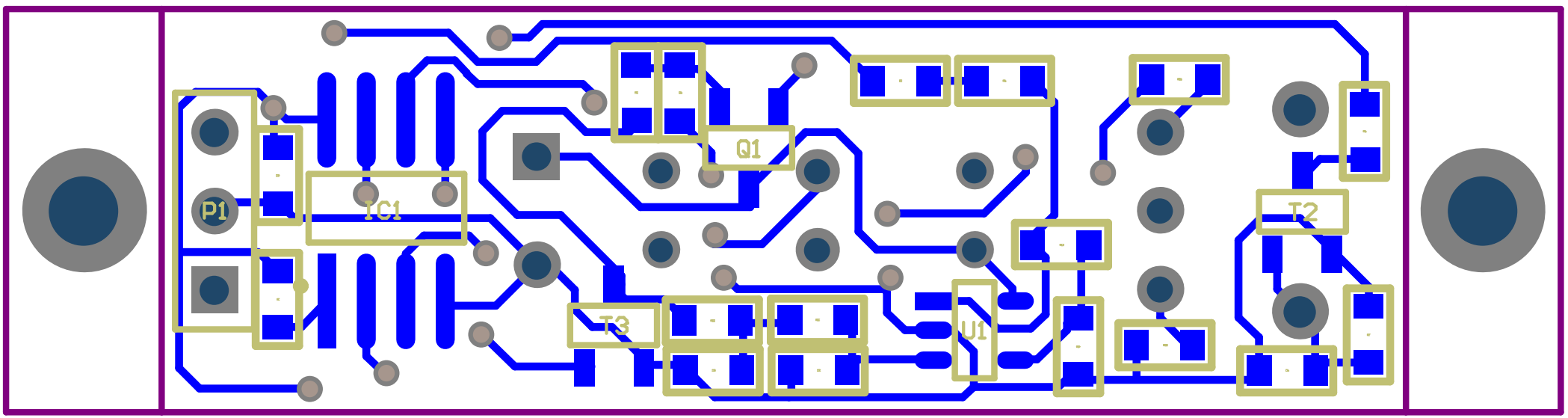
P1
IC1
Q1
T3
U1
T2

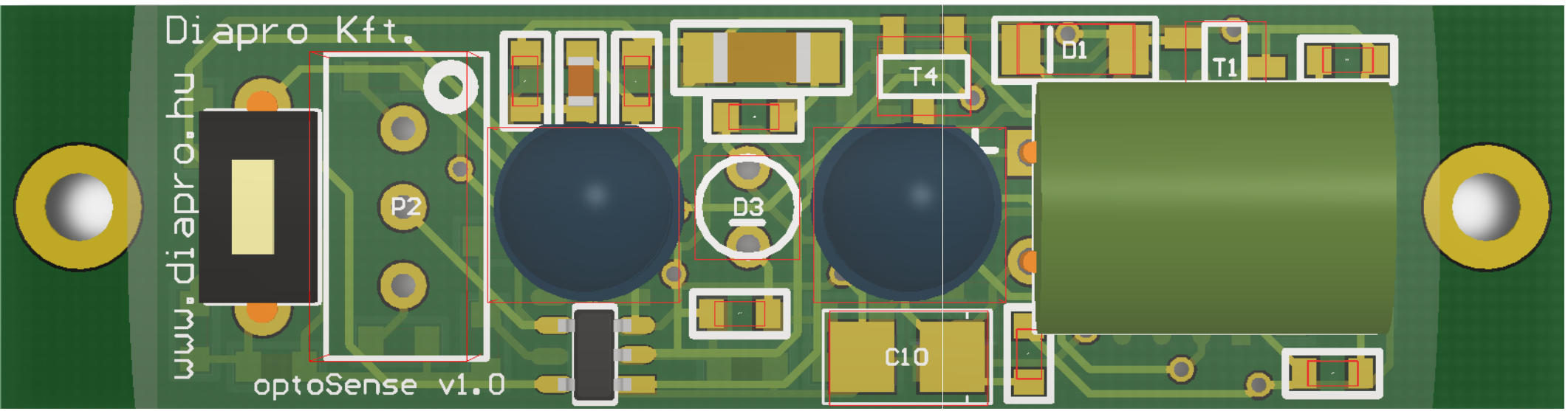
Diapro Kft.
www.diapro.hu
optoSense v1.0
P2
D3
T4
D1
T1
C10

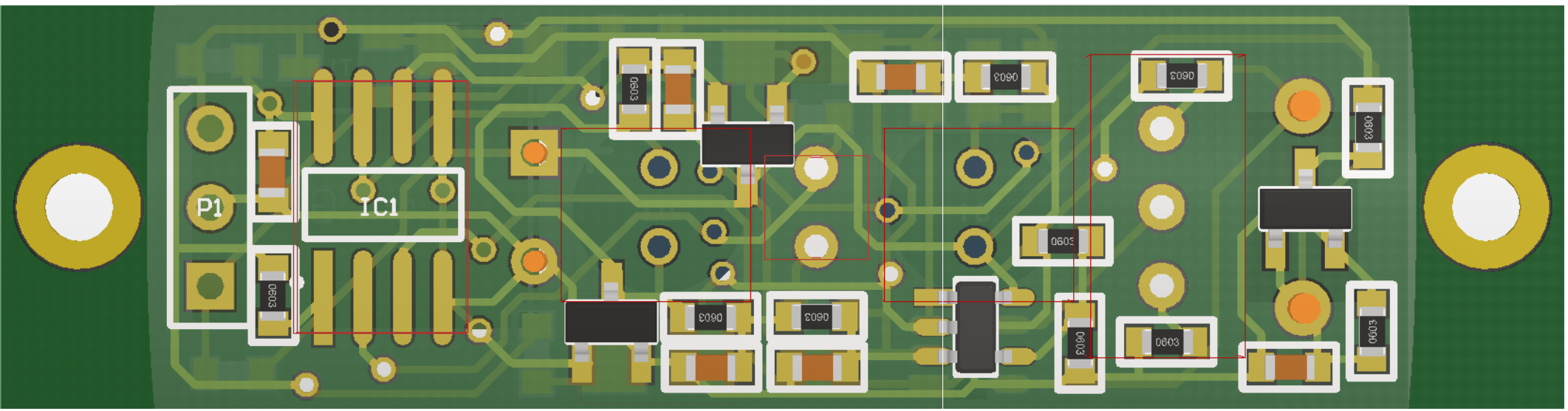
P1
IC1
0603
0603
0603
0603
0603
0603
0603
0603
0603
0603
0603

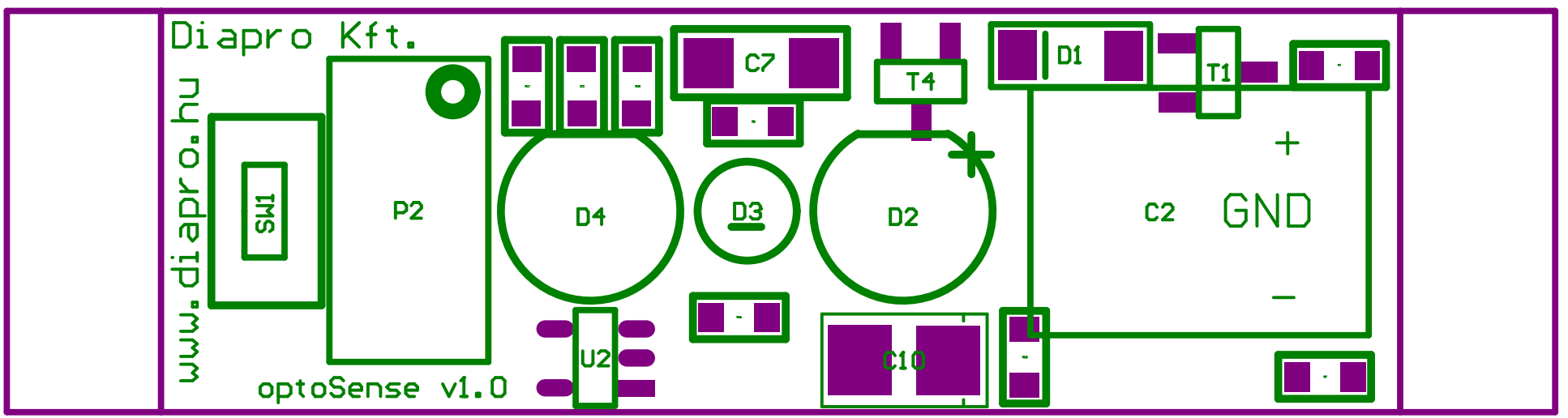
Diapro Kft.
www.diapro.hu
SW1
P2
D4
D3
D2
C7
T4
D1
T1
C2
GND
+
–
U2
C10
optoSense v1.0

R3

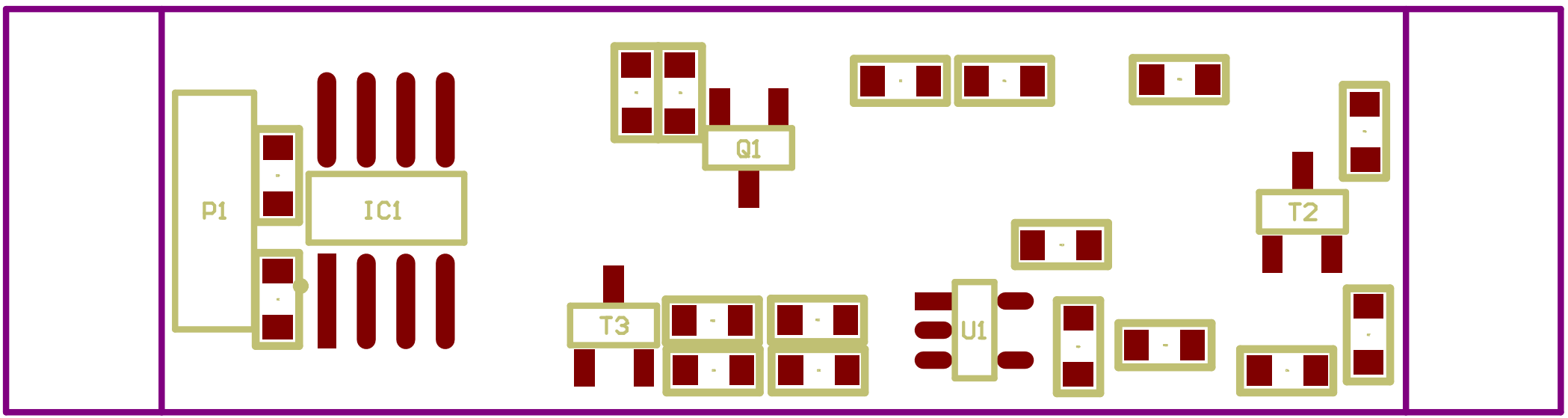
P1
IC1
Q1
T3
U1
T2

Comment	Description	Designator	Footprint	LibRef	Order info	Quantity	T qés
150pF	Capacitor	C1, C8, C9, C11	FP_0603_CAP_080	CAP	82-08-61	4	
1000uF	Polarized Capacitor	C2	CAP_8x11_fekvo	CAP_ELECT	12-19-15	1	
100nF	Capacitor	C3, C5, C6	FP_0603_CAP_080	CAP	82-04-85	3	
22uF	Capacitor	C7	FP_1206_CAP_125	Cap	82-08-07	1	10%
100uF	Polarized Capacitor	C10	FP_3528	CAP_ELECT	92-01-02	1	
ZENER_8.2V	Zener Diode	D1	SOD-80	ZENER	85-01-21	1	
IR ado	Typical LED	D2	LED_IR_5mm	LED_B	38-02-21	1	
LED_RED	Typical LED	D3	led_3mm_standingR	LED_R	34-06-65	1	
IR vevo	Typical LED	D4	LED_IR_5mm	LED_B	38-01-91	1	
ATtiny13		IC1	WSON_n_SOIC8	ATtiny13	http://hu.farnell.com/atmel/attiny13a-ssh/mcu-8bit-attiny-20mhz-soic-8/dp/1715519	1	
POTI		P2	RES_trimmer_helipot_mini_90	POTI	05-05-89	1	
NPN BC847A		Q1	TR_SOT23	NPN	86-03-86	1	
10K	Resistor	R1, R5, R6, R7, R9, R16	FP_0603_RES	RES	81-10-38	6	
1K5	Resistor	R2, R4	FP_0603_RES	RES	81-10-28	2	
100K	Resistor	R3, R10, R11, R15	FP_0603_RES	RES	81-10-50	4	
15K	Resistor	R8	FP_0603_RES	RES	80-12-06	1	
3K	Resistor	R12	FP_0603_RES	RES	81-15-24	1	
120R	Resistor	R13	FP_0603_RES	RES	81-12-21	1	
2.2K	Resistor	R14	FP_0603_RES	RES	81-10-30	1	
470K	Resistor	R17	FP_0603_RES	RES	81-10-58	1	
560K	Resistor	R18	FP_0603_RES	RES	81-10-59	1	
0R	Resistor	R19	FP_0603_RES	RES	81-18-05	1	
SW_tactile_2pin		SW1	SW_TACT_2PIN	SW_tactile_2pin	45-07-27	1	
BSS84		T1	FET_SOT23	PMOS	86-03-04	1	
MMBF170		T2, T3	FET_SOT23	NMOS	86-01-96	2	
SI2306		T4	FET_SOT23	NMOS	86-01-57	1	
MCP6001		U1, U2	ANALOG_SOT23-5	MCP6001	http://hu.farnell.co	2	