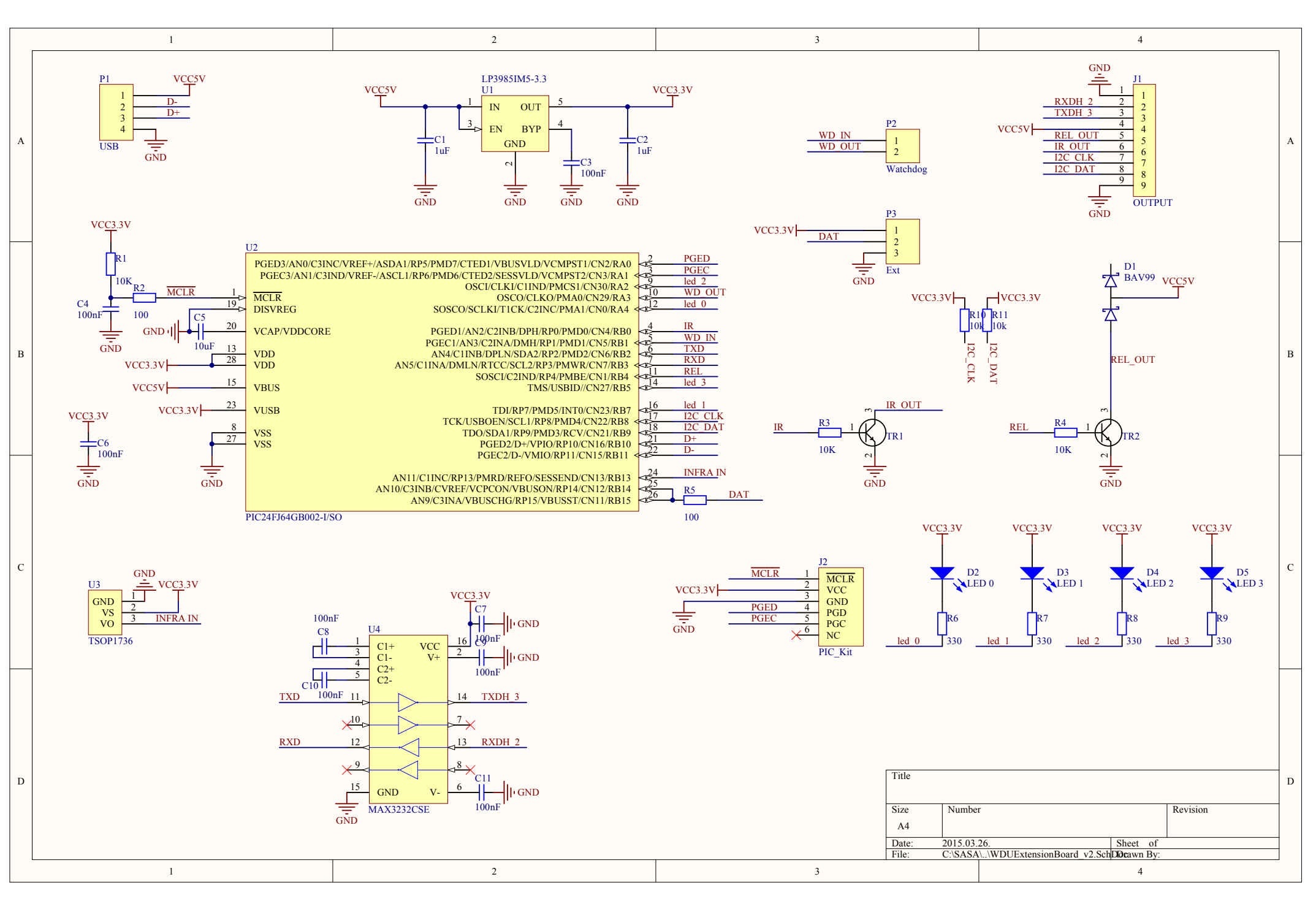
P1
USB
VCC5V
D-
D+
GND
LP3985IM5-3.3
U1
IN
OUT
EN
BYP
GND
VCC5V
VCC3.3V
C1
1uF
C2
1uF
C3
100nF
P2
Watchdog
WD_IN
WD_OUT
J1
OUTPUT
RXDH_2
TXDH_3
REL_OUT
IR_OUT
I2C_CLK
I2C_DAT
P3
Ext
DAT
U2
PIC24FJ64GB002-I/SO
PGED3/AN0/C3INC/VREF+/ASDA1/RP5/PMD7/CTED1/VBUSVLD/VCMPST1/CN2/RA0
PGEC3/AN1/C3IND/VREF-/ASCL1/RP6/PMD6/CTED2/SESSVLD/VCMPST2/CN3/RA1
OSCI/CLKI/C1IND/PMCS1/CN30/RA2
OSCO/CLKO/PMA0/CN29/RA3
SOSCO/SCLKI/T1CK/C2INC/PMA1/CN0/RA4
PGED1/AN2/C2INB/DPH/RP0/PMD0/CN4/RB0
PGEC1/AN3/C2INA/DMH/RP1/PMD1/CN5/RB1
AN4/C1INB/DPLN/SDA2/RP2/PMD2/CN6/RB2
AN5/C1INA/DMLN/RTCC/SCL2/RP3/PMWR/CN7/RB3
SOSCI/C2IND/RP4/PMBE/CN1/RB4
TMS/USBID//CN27/RB5
TDI/RP7/PMD5/INT0/CN23/RB7
TCK/USBOEN/SCL1/RP8/PMD4/CN22/RB8
TDO/SDA1/RP9/PMD3/RCV/CN21/RB9
PGED2/D+/VPIO/RP10/CN16/RB10
PGEC2/D-/VMIO/RP11/CN15/RB11
AN11/C1INC/RP13/PMRD/REFO/SESSEND/CN13/RB13
AN10/C3INB/CVREF/VCPCON/VBUSON/RP14/CN12/RB14
AN9/C3INA/VBUSCHG/RP15/VBUSST/CN11/RB15
MCLR
DISVREG
VCAP/VDDCORE
VDD
VDD
VBUS
VUSB
VSS
VSS
PGED
PGEC
led_2
WD_OUT
led_0
IR
WD_IN
TXD
RXD
REL
led_3
led_1
I2C_CLK
I2C_DAT
D+
D-
INFRA_IN
DAT
R1
10K
R2
100
C4
100nF
C5
10uF
C6
100nF
R5
100
R10
10k
R11
10k
D1
BAV99
VCC5V
REL_OUT
R3
10K
TR1
IR_OUT
R4
10K
TR2
REL
U3
TSOP1736
GND
VS
VO
INFRA_IN
U4
MAX3232CSE
C1+
C1-
C2+
C2-
VCC
V+
GND
V-
C7
C8
C9
C10
C11
100nF
TXD
RXD
TXDH_3
RXDH_2
J2
PIC_Kit
MCLR
VCC
GND
PGD
PGC
NC
PGED
PGEC
D2
LED 0
D3
LED 1
D4
LED 2
D5
LED 3
R6
R7
R8
R9
330
led_0
led_1
led_2
led_3
Title
Size
A4
Number
Revision
Date:
2015.03.26.
Sheet of
File:
C:\SASA\..\WDUExtensionBoard_v2.SchDoc
Drawn By:

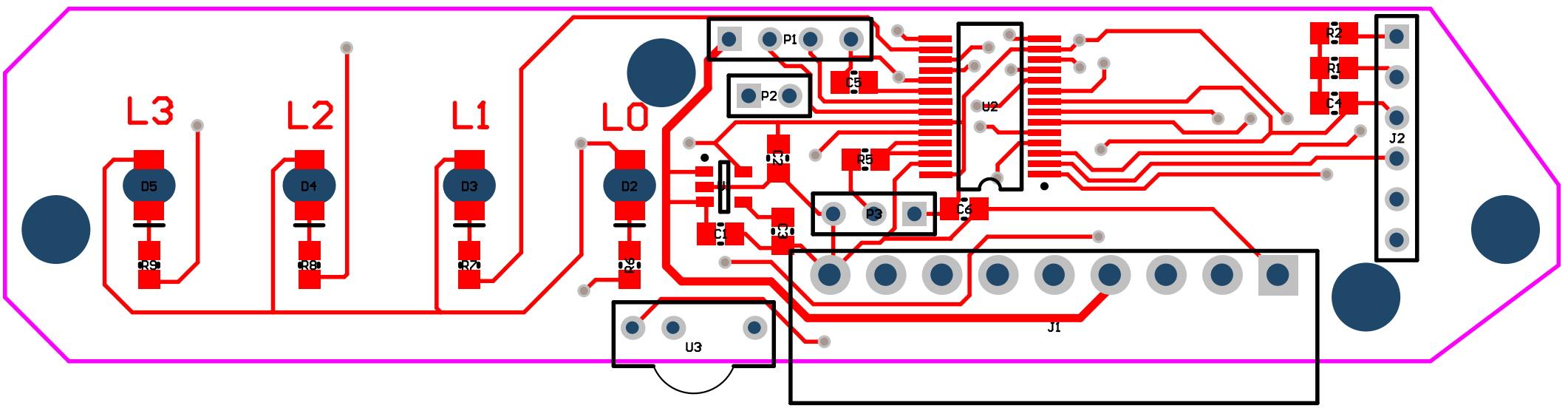
L3
L2
L1
L0
D5
D4
D3
D2
R9
R8
R7
R6
P1
P2
P3
C5
C1
C6
R3
R5
U1
U2
U3
R2
R1
C4
J2
J1

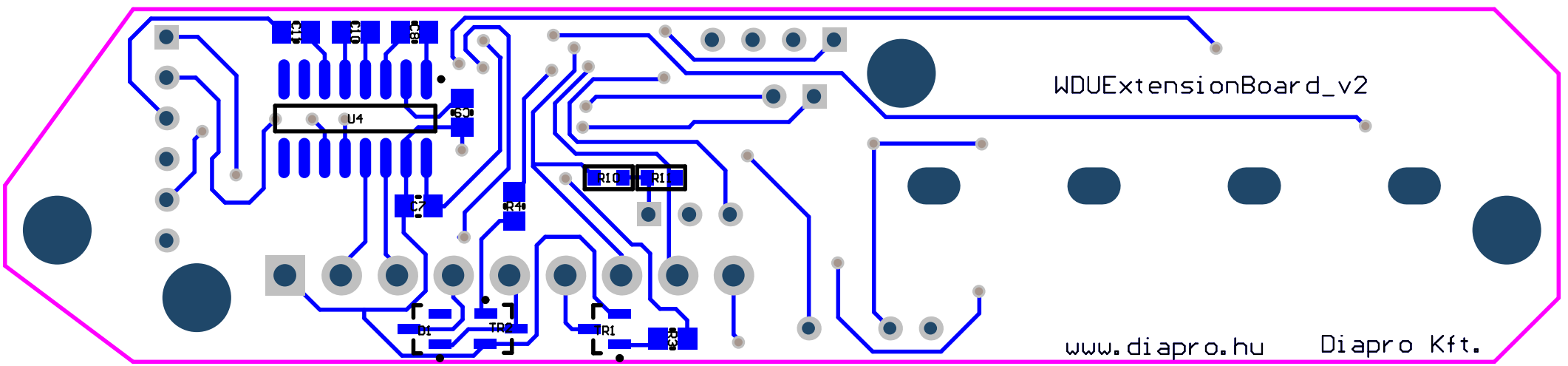
WDUExtensionBoard_v2
U4
C7
R4
R10
R11
D1
TR2
TR1
www.diapro.hu
Diapro Kft.

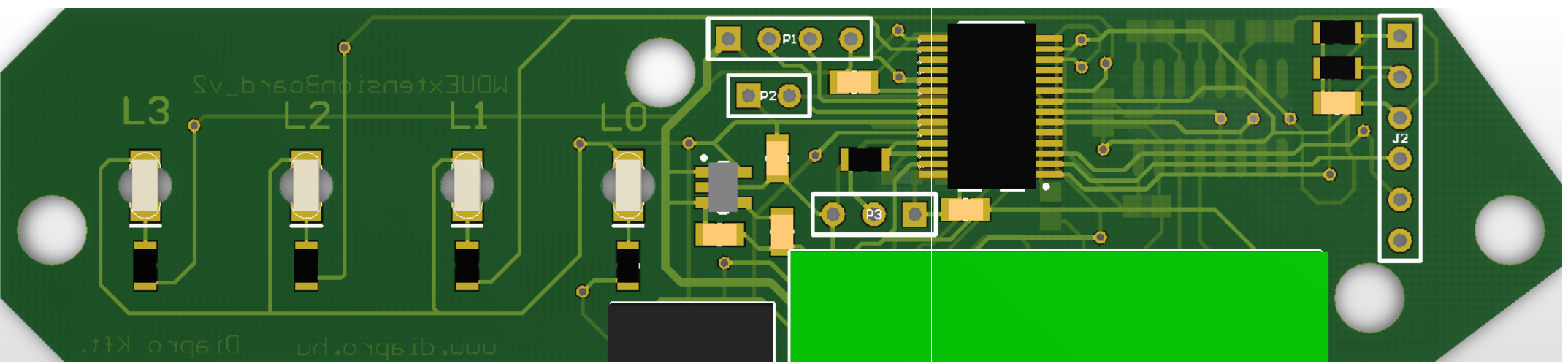
L3
L2
L1
L0
P1
P2
P3
J2

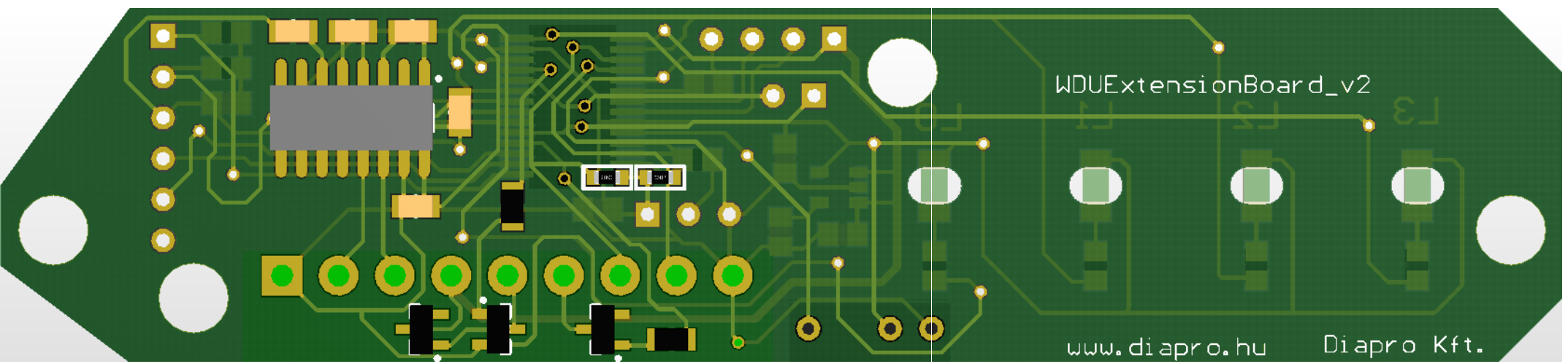
WDUExtensionBoard_v2
www.diapro.hu
Diapro Kft.

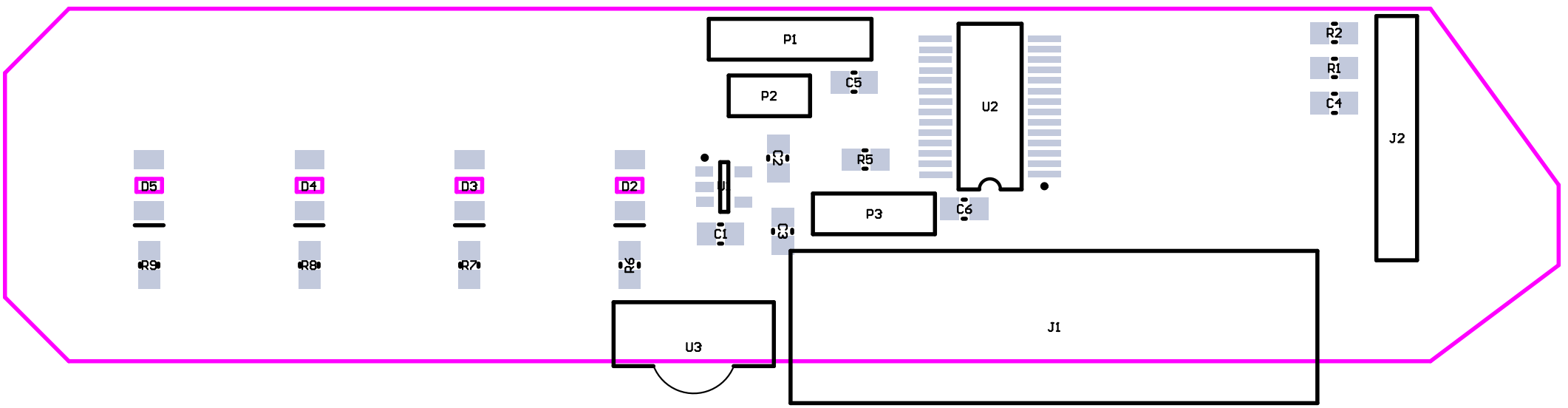
P1
P2
C5
U2
R2
R1
C4
J2
D5
D4
D3
D2
U
R3
R5
P3
C6
C1
C3
R9
R8
R7
R6
U3
J1

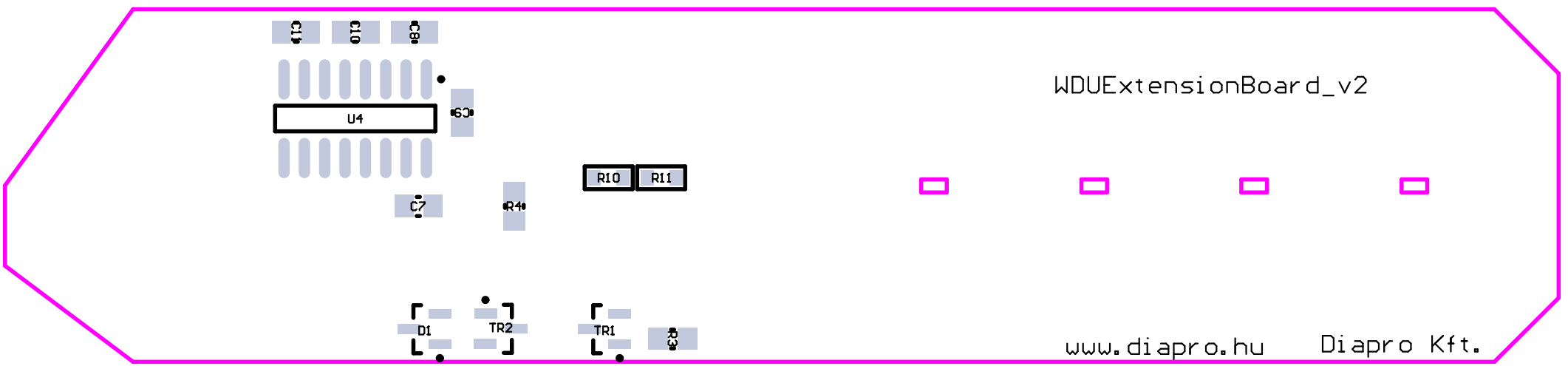
C11
C10
C8
U4
C9
R10
R11
C7
R4
D1
TR2
TR1
R3
WDUExtensionBoard_v2
www.diapro.hu
Diapro Kft.

Comment	Description	Designator	Footprint	LibRef	Order info	Quantity	T qés
1uF	Capacitor	C1, C2	0805 CAP	CAP		2	
100nF	Capacitor	C3, C4, C6, C7, C8, C9, C10, C11	0805 CAP	CAP		8	
10uF	Capacitor	C5	0805 CAP	CAP		1	
BAV99	Dual Schottky series - 0.2A, 75V	D1	SOT23	BAV99		1	
LED 0	Typical RED, GREEN, YELLOW, AMBER GaAs LED	D2	1206 LED Reversed	LED2		1	
LED 1	Typical RED, GREEN, YELLOW, AMBER GaAs LED	D3	1206 LED Reversed	LED2		1	
LED 2	Typical RED, GREEN, YELLOW, AMBER GaAs LED	D4	1206 LED Reversed	LED2		1	
LED 3	Typical RED, GREEN, YELLOW, AMBER GaAs LED	D5	1206 LED Reversed	LED2		1	
OUTPUT		J1	Euroblock 3.5pitch 9P	Euroblock 9P connector		1	
PIC_Kit	PIC Kit connector	J2	HDR1X6	PIC_Kit		1	
USB	Header, 4-Pin	P1	HDR1X4	Header 4		1	
Watchdog	Header, 2-Pin	P2	HDR1X2	Header 2		1	
Ext	Header, 3-Pin	P3	HDR1X3	Header 3		1	
10K	Resistor	R1, R3, R4	0805 RES	RES		3	
100	Resistor	R2, R5	0805 RES	RES		2	
330	Resistor	R6, R7, R8, R9	0805 RES	RES		4	
10k	Resistor	R10, R11	FP_0603_RES	Res3	L: 81-10-38	2	5%
BC846	NPN Transistor, 80 V, SOT23	TR1, TR2	SOT23	BC846		2	
LP3985IM5-3.3	Micropower, 150mA Low-Noise Ultra Low-Dropout CMOS Voltage Regulator	U1	MF05A_N	LP3985IM5-3.3		1	
PIC24FJ64GB002-I/SO	16-Bit Flash Microcontroller with USB On-The-Go and nanoWatt XLP, 64KB Flash, 8KB SRAM, 28-Pin SOIC, Industrial Temperature	U2	SSOP-28	PIC24FJ64GB002-I/SO		1	
TSOP1736	IR Receiver, 3-Pin	U3	TSOP17xx	TSOP17xx		1	
MAX3232CSE	3.0V TO 5.5V, Low	U4	NSO16_M	MAX3232CSE		1	