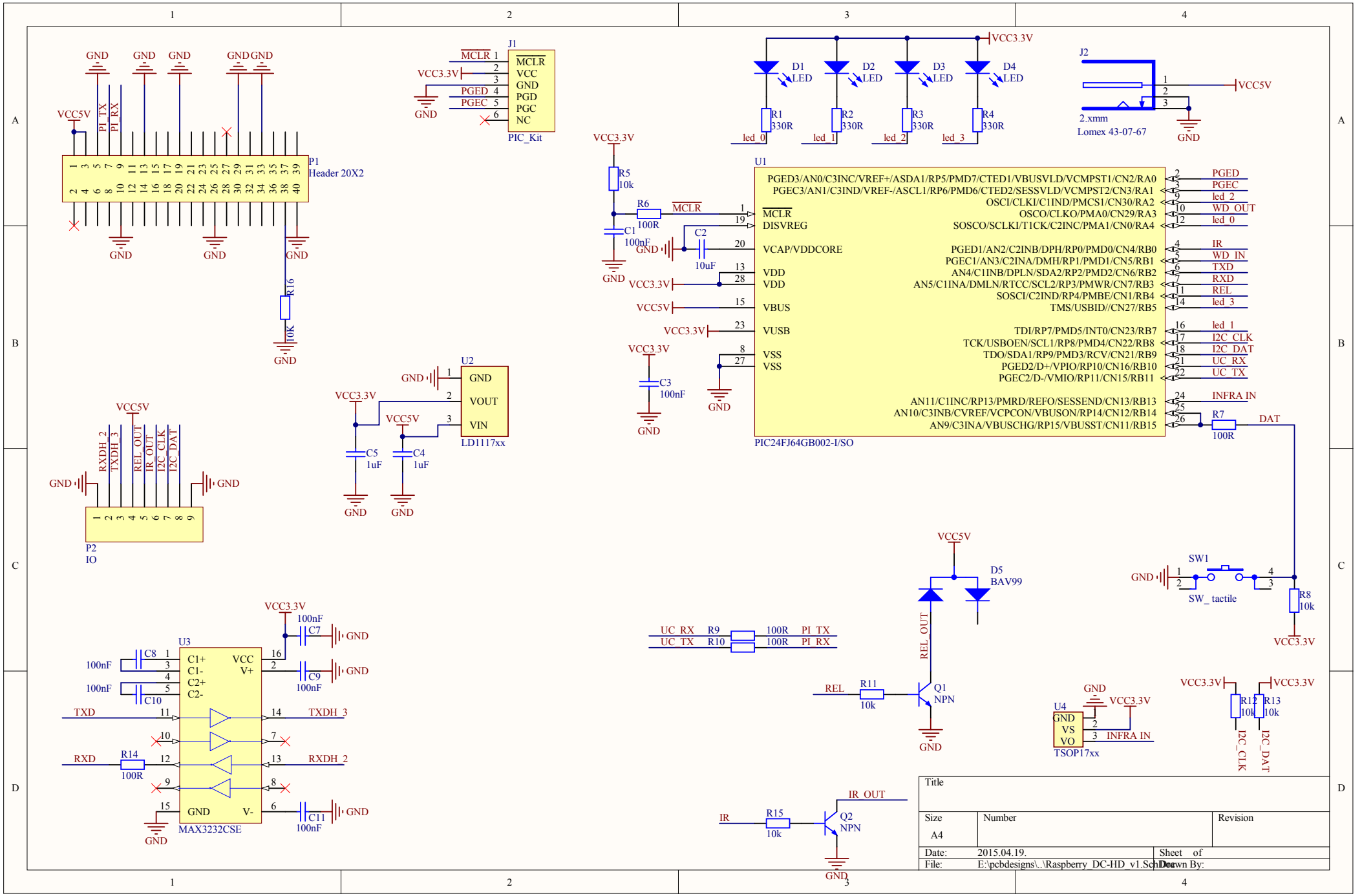

P1
Header 20X2
VCC5V
PI_TX
PI_RX
GND
R16
10K
J1
MCLR
VCC
GND
PGD
PGC
NC
PIC_Kit
VCC3.3V
PGED
PGEC
D1
D2
D3
D4
LED
R1
R2
R3
R4
330R
led_0
led_1
led_2
led_3
J2
2.xmm
Lomex 43-07-67
R5
10k
R6
100R
C1
100nF
C2
10uF
C3
100nF
U1
PGED3/AN0/C3INC/VREF+/ASDA1/RP5/PMD7/CTED1/VBUSVLD/VCMPST1/CN2/RA0
PGEC3/AN1/C3IND/VREF-/ASCL1/RP6/PMD6/CTED2/SESSVLD/VCMPST2/CN3/RA1
OSCI/CLKI/C1IND/PMCS1/CN30/RA2
OSCO/CLKO/PMA0/CN29/RA3
SOSCO/SCLKI/T1CK/C2INC/PMA1/CN0/RA4
MCLR
DISVREG
VCAP/VDDCORE
VDD
VDD
VBUS
VUSB
VSS
VSS
PGED1/AN2/C2INB/DPH/RP0/PMD0/CN4/RB0
PGEC1/AN3/C2INA/DMH/RP1/PMD1/CN5/RB1
AN4/C1INB/DPLN/SDA2/RP2/PMD2/CN6/RB2
AN5/C1INA/DMLN/RTCC/SCL2/RP3/PMWR/CN7/RB3
SOSCI/C2IND/RP4/PMBE/CN1/RB4
TMS/USBID//CN27/RB5
TDI/RP7/PMD5/INT0/CN23/RB7
TCK/USBOEN/SCL1/RP8/PMD4/CN22/RB8
TDO/SDA1/RP9/PMD3/RCV/CN21/RB9
PGED2/D+/VPIO/RP10/CN16/RB10
PGEC2/D-/VMIO/RP11/CN15/RB11
AN11/C1INC/RP13/PMRD/REFO/SESSEND/CN13/RB13
AN10/C3INB/CVREF/VCPCON/VBUSON/RP14/CN12/RB14
AN9/C3INA/VBUSCHG/RP15/VBUSST/CN11/RB15
PIC24FJ64GB002-I/SO
PGED
PGEC
led_2
WD_OUT
led_0
IR
WD_IN
TXD
RXD
REL
led_3
led_1
I2C_CLK
I2C_DAT
UC_RX
UC_TX
INFRA IN
R7
100R
DAT
U2
GND
VOUT
VIN
LD1117xx
C5
1uF
C4
1uF
RXDH_2
TXDH_3
REL_OUT
IR_OUT
I2C_CLK
I2C_DAT
P2
IO
U3
C1+
C1-
C2+
C2-
VCC
V+
GND
V-
MAX3232CSE
C8
C10
C7
C9
C11
100nF
TXD
RXD
R14
100R
TXDH_3
RXDH_2
UC_RX
UC_TX
R9
R10
100R
PI_TX
PI_RX
D5
BAV99
REL_OUT
REL
R11
10k
Q1
NPN
SW1
SW_ tactile
R8
10k
U4
GND
VS
VO
TSOP17xx
R12
R13
10k
IR
R15
10k
Q2
NPN
IR_OUT
Title
Size
A4
Number
Revision
Date:
2015.04.19.
Sheet of
File:
E:\pcbdesigns\..\Raspberry_DC-HD_v1.SchDoc
Drawn By:

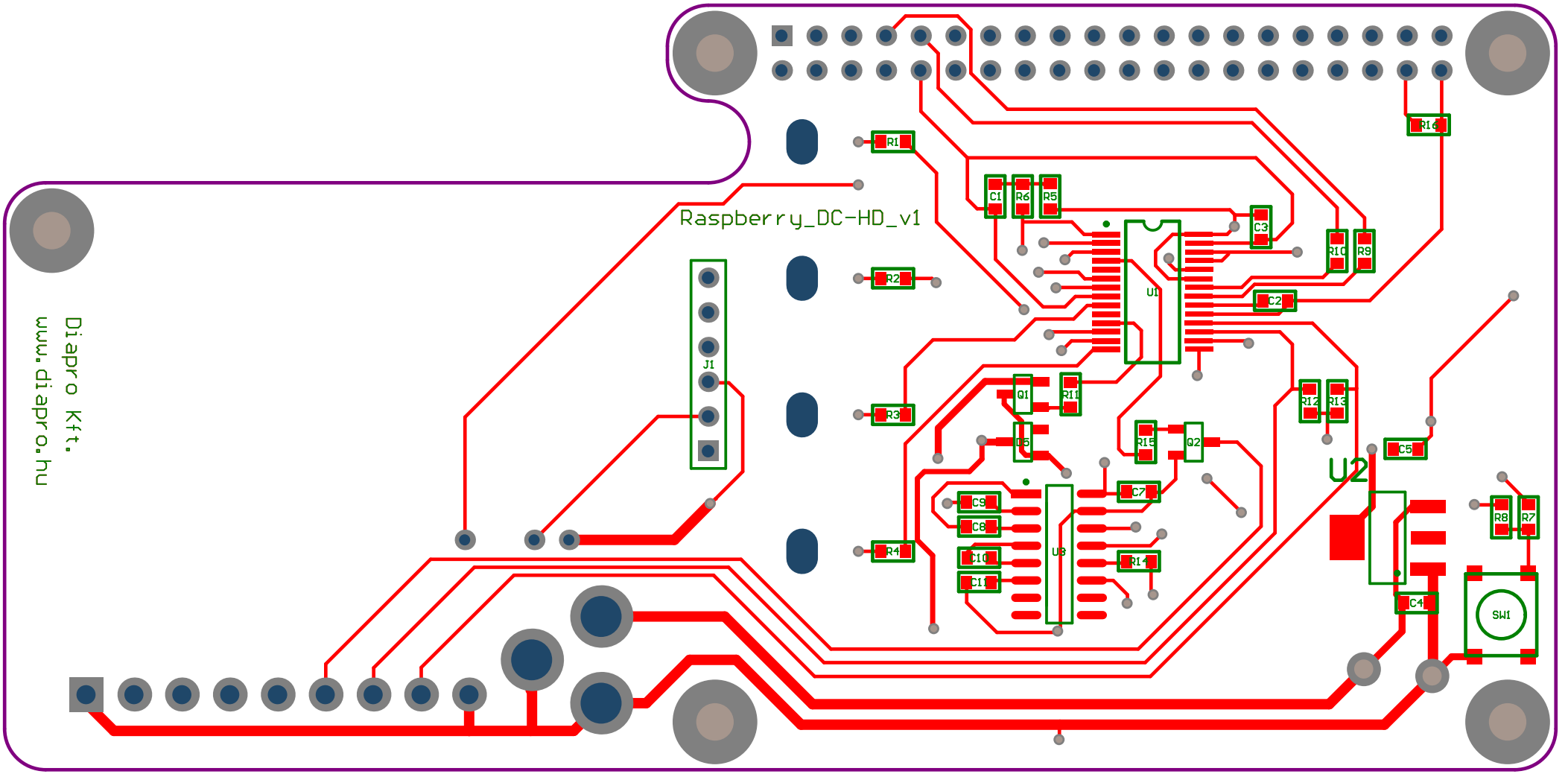
Raspberry_DC-HD_v1
Diapro Kft.
www.diapro.hu
J1
U1
U2
U3
SW1
R1
R2
R3
R4
R5
R6
R7
R8
R9
R10
R11
R12
R13
R14
R15
C1
C2
C3
C4
C5
C7
C8
C9
C10
C11
Q1
Q2
D5

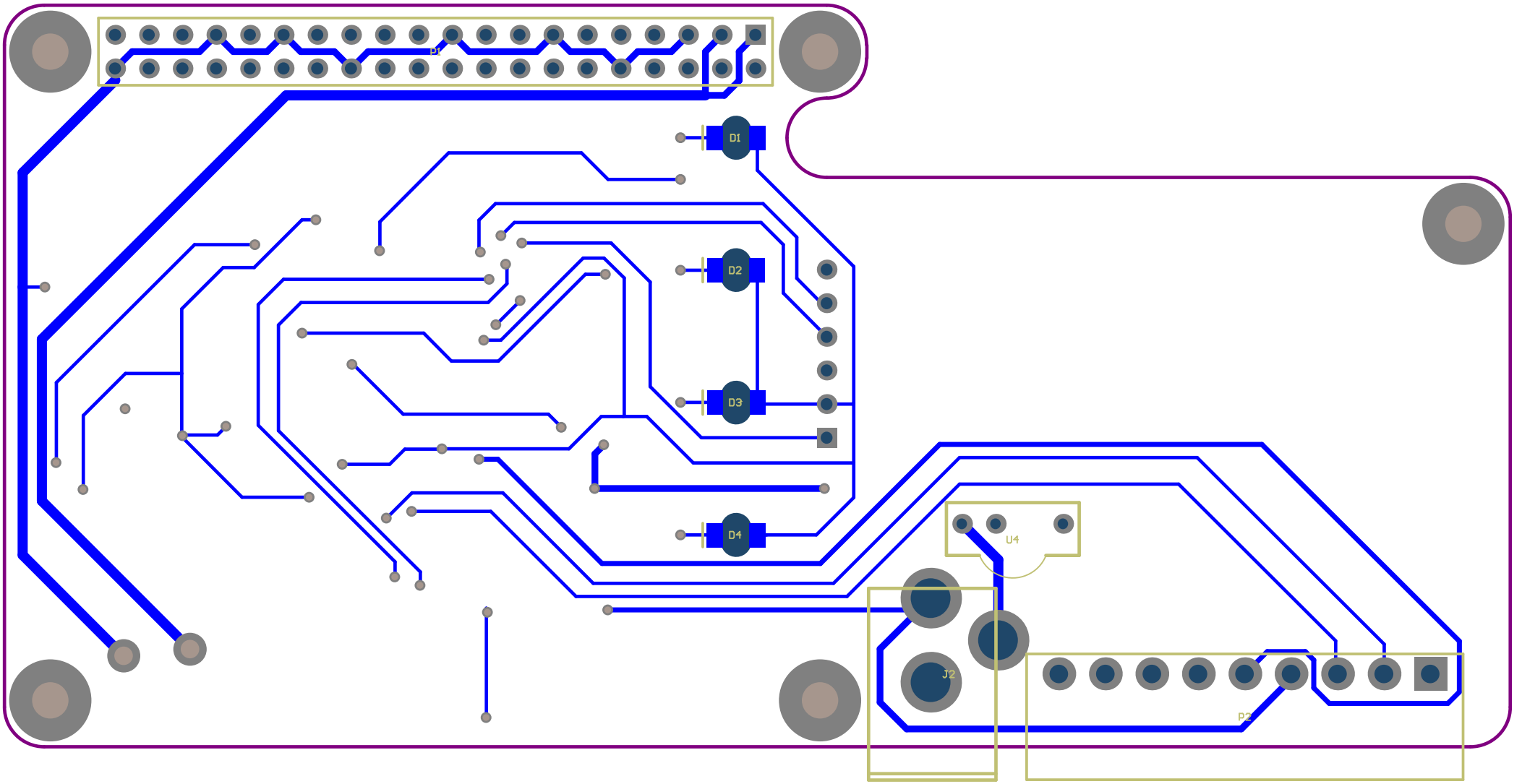
P1
D1
D2
D3
D4
U4
J2
P3

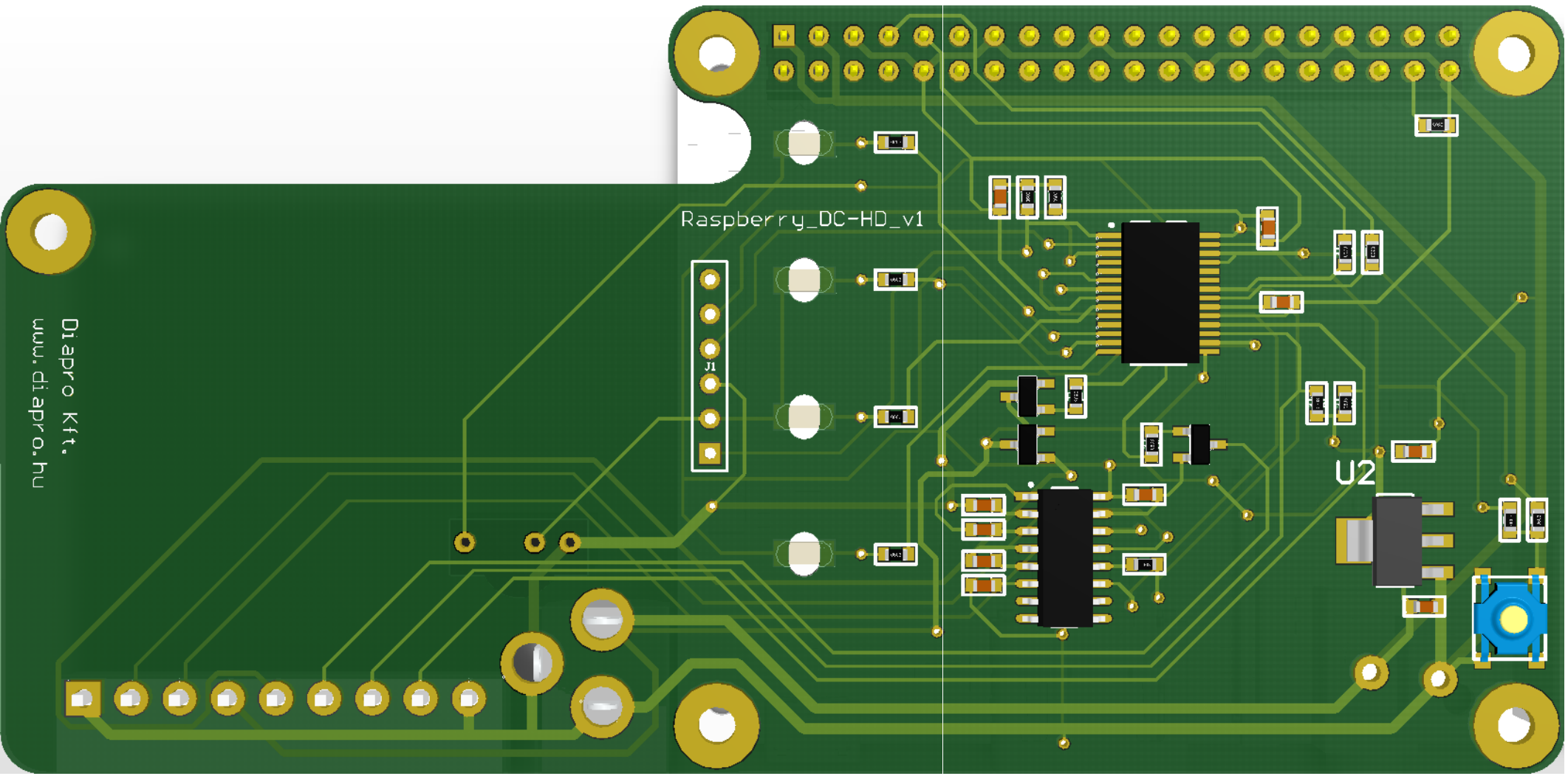
Raspberry_DC-HD_v1
J1
U2
Diapro Kft.
www.diapro.hu

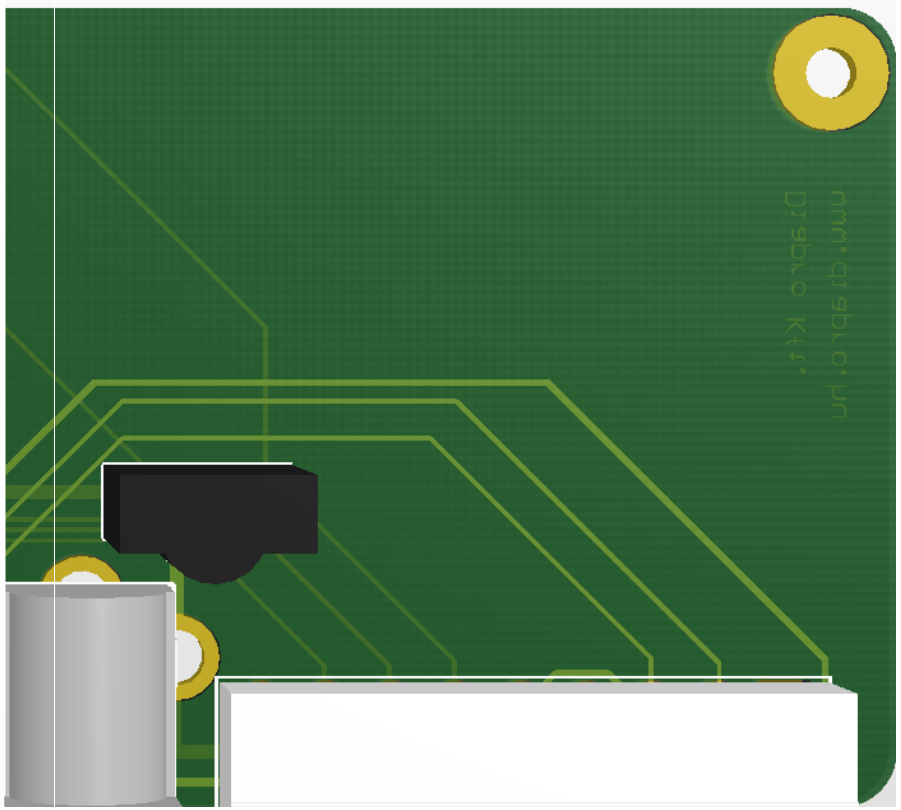

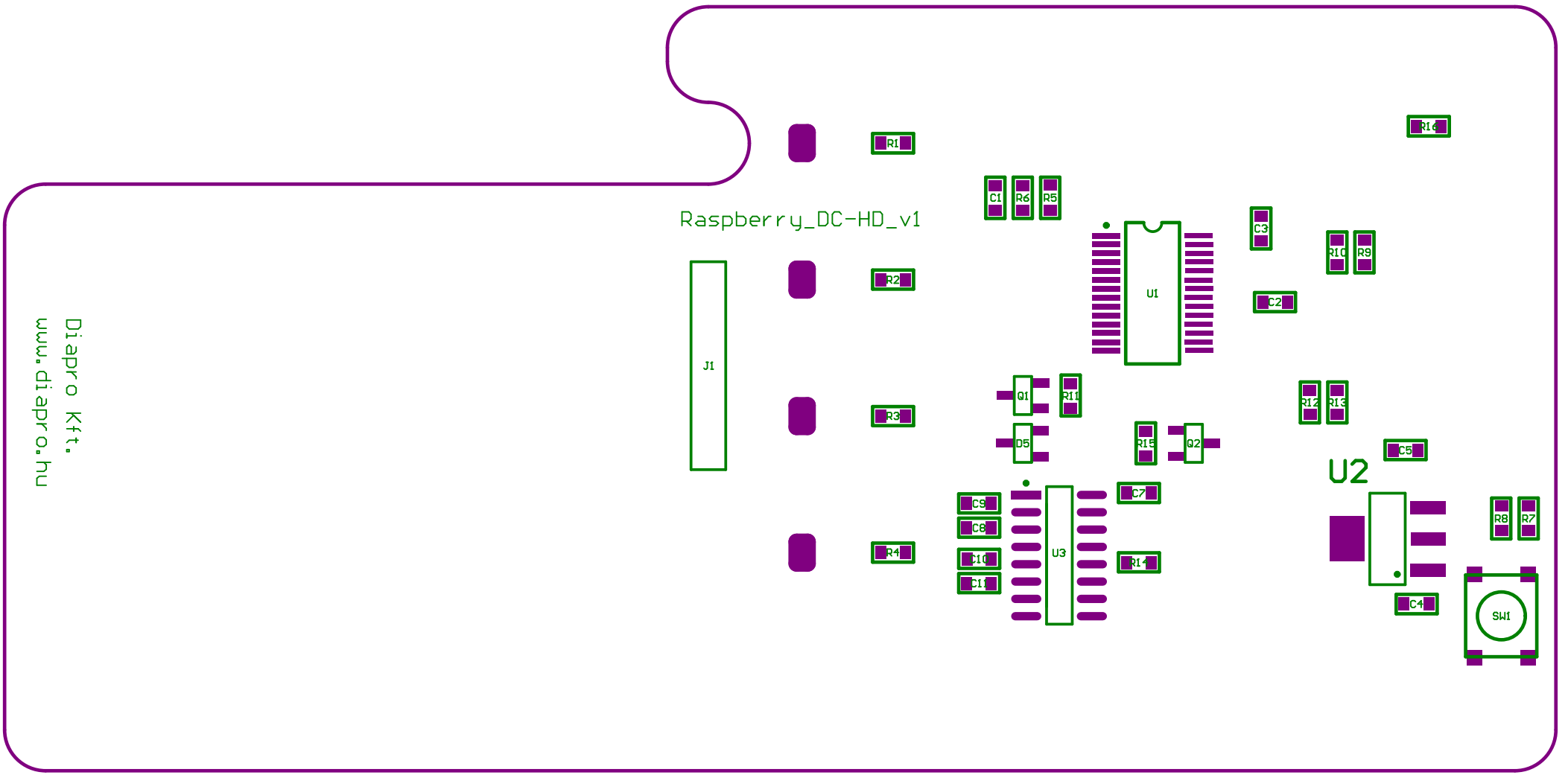

Diapro Kft.
www.diapro.hu

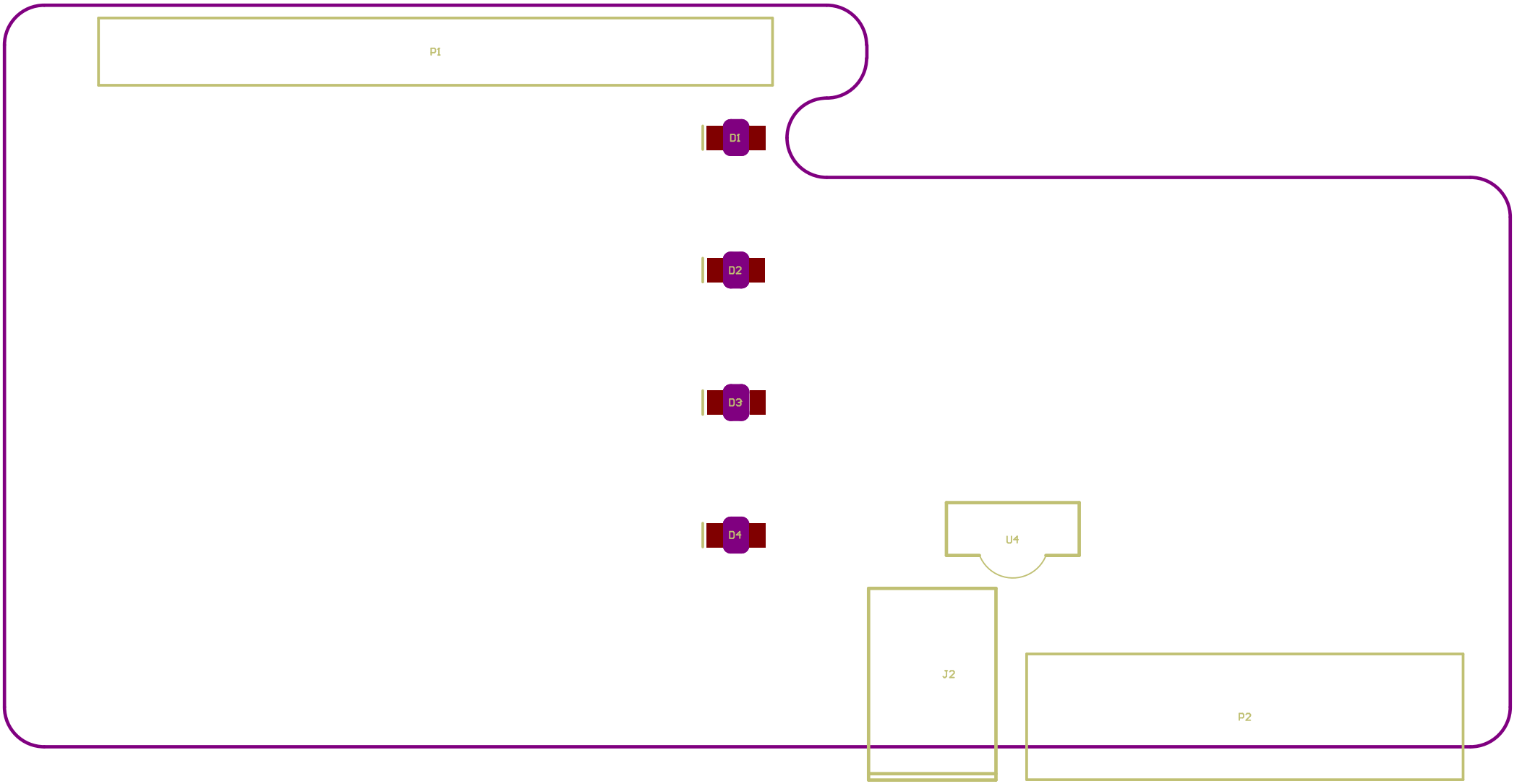
P1
D1
D2
D3
D4
U4
J2
P2

Comment	Description	Designator	Footprint	LibRef	Order info	Quantity	T qés
100nF	Capacitor	C1, C3, C7, C8, C9, C10, C11	FP_0603_CAP_080	CAP		7	
10uF	Capacitor	C2	FP_0603_CAP_080	CAP		1	
1uF	Capacitor	C4, C5	FP_0603_CAP_080	CAP		2	
LED	Typical LED	D1, D2, D3, D4	1206 LED Reversed	LED		4	
BAV99		D5	DIODE_SOT23_serial	BAV99		1	
PIC_Kit	PIC Kit connector	J1	HDR1X6	PIC_Kit		1	
2.xmm	2.xmm DC HEBA25 TÁPFESZÜLTSÉG ALJZAT ZÁRT, NYÁKBA 90°	J2	FP_DC_TAP_ANYA	DC_TAP_ANYA	Lomex 43-07-67	1	
Header 20X2	Header, 20-Pin, Dual row	P1	Header_2X20_pin_2.54	Header 20X2		1	
IO	Header, 9-Pin	P2	Euroblock 3.5pitch 9P	Header 9		1	
NPN		Q1, Q2	TR_SOT23	NPN		2	
330R	Resistor	R1, R2, R3, R4	FP_0603_RES	RES		4	
10k	Resistor	R5, R8, R11, R12, R13, R15, R16	FP_0603_RES	RES, Res3	L: 81-10-38	7	5%
100R	Resistor	R6, R7, R9, R10, R14	FP_0603_RES	RES		5	
SW_ tactile		SW1	flat_smd_button	SW_ tactile		1	
PIC24FJ64GB002-I/SO	16-Bit Flash Microcontroller with USB On-The-Go and nanoWatt XLP, 64KB Flash, 8KB SRAM, 28-Pin SOIC, Industrial Temperature	U1	SSOP-28	PIC24FJ64GB002-I/SO		1	
LD1117xx	LD1117xx 3,3V lin reg	U2	SUPPLY_SOT223	LD1117xx	http://hu.mouser.com/ProductDetail/NXP/NX1117C33Z115/?qs=%2fha2pyFadui8%252bOpsKr9N%2fhvfdxjCMx%252bF0NTwqG%252bWOJY%3d	1	
MAX3232CSE	3.0V TO 5.5V, Low-Power, up to 1Mbps, True RS-232 Transceiver Using Four 0.1µF External Capacitor	U3	DIGITAL_SOIC16	MAX3232CSE		1	
TSOP17xx	TSOP17xx IR recei	U4	TSOP17xx	TSOP17xx		1	