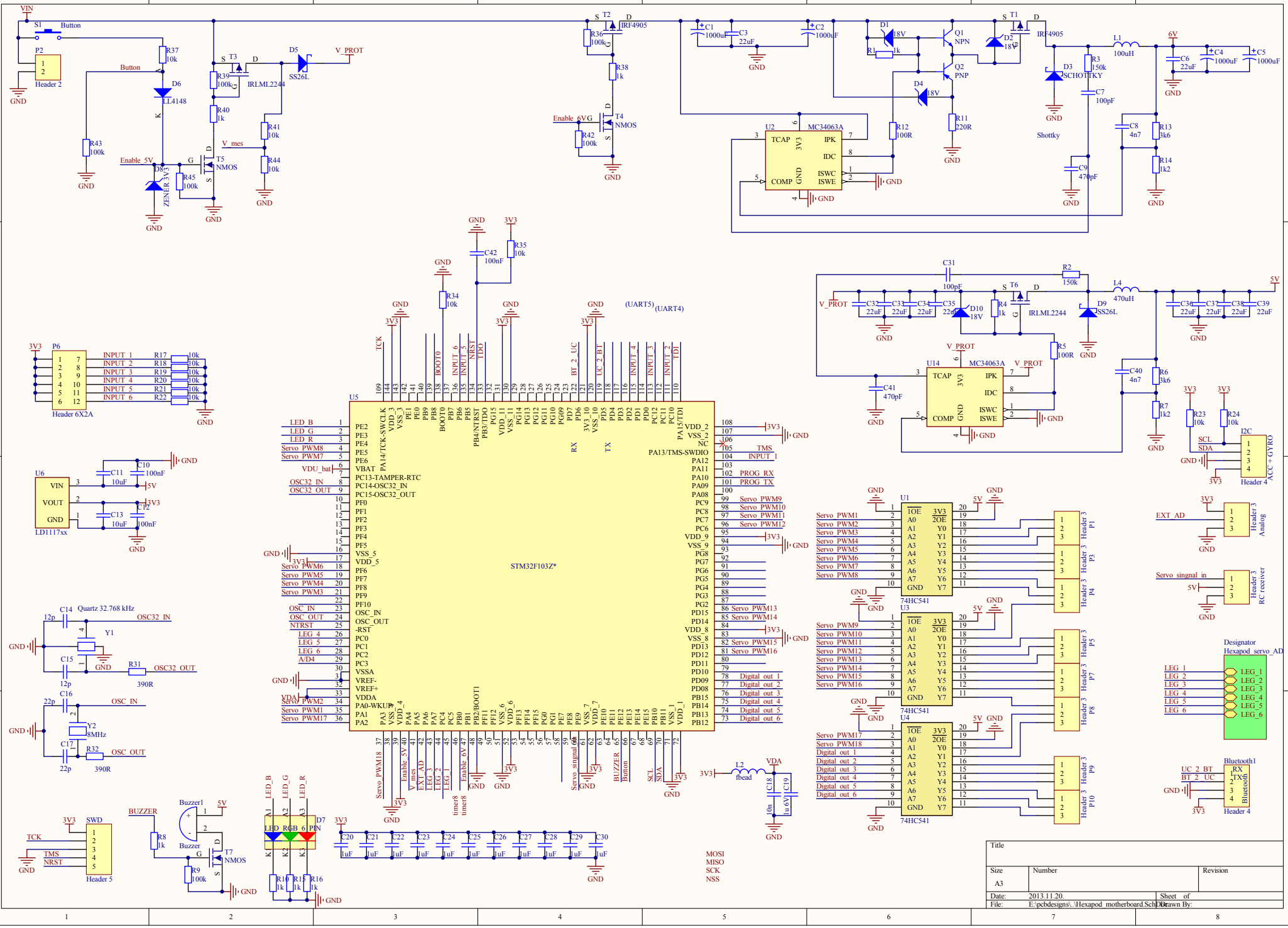
VIN
S1
Button
P2
Header 2
R37 10k
R43 100k
D6 LL4148
R39 100k
T3 IRLML2244
R40 1k
R41 10k
R44 10k
D5 SS26L
V_PROT
V_mes
Enable_5V
D8 ZENER 3V3
R45 100k
T5 NMOS
GND
R36 100k
T2 IRF4905
R38 1k
Enable_6VG
R42 100k
T4 NMOS
C1 1000uF
C3 22uF
C2 1000uF
D1 18V
R1 1k
Q1 NPN
Q2 PNP
D4 18V
U2 MC34063A
TCAP
IPK
IDC
ISWC
ISWE
COMP
R12 100R
R11 220R
T1 IRF4905
D2 18V
D3 SCHOTTKY
Shottky
R3 150k
L1 100uH
6V
C6 22uF
C4 1000uF
C5 1000uF
C7 100pF
C8 4n7
R13 3k6
R14 1k2
C9 470pF
P6
Header 6X2A
INPUT_1
INPUT_2
INPUT_3
INPUT_4
INPUT_5
INPUT_6
R17 10k
R18 10k
R19 10k
R20 10k
R21 10k
R22 10k
C42 100nF
R35 10k
R34 10k
(UART5)
(UART4)
U5
STM32F103Z*
LED_B
LED_G
LED_R
Servo_PWM8
Servo_PWM7
VDU_bat
OSC32_IN
OSC32_OUT
OSC_IN
OSC_OUT
NTRST
LEG_4
LEG_5
LEG_6
A/D4
Servo_PWM6
Servo_PWM5
Servo_PWM4
Servo_PWM3
Servo_PWM2
Servo_PWM1
Servo_PWM17
Servo_PWM18
Enable_5V
V_mes
EXT_AD
LEG_3
LEG_2
LEG_1
Enable_6V
Servo_singnal_in
BUZZER
Buton
SCL
SDA
TMS
PROG_RX
PROG_TX
INPUT_1
Servo_PWM9
Servo_PWM10
Servo_PWM11
Servo_PWM12
Servo_PWM13
Servo_PWM14
Servo_PWM15
Servo_PWM16
Digital_out_1
Digital_out_2
Digital_out_3
Digital_out_4
Digital_out_5
Digital_out_6
U6
LD1117xx
C11 10uF
C10 100nF
C13 10uF
C12 100nF
5V
3V3
C14 Quartz 32.768 kHz
12p
Y1
C15 12p
R31 390R
OSC32_IN
OSC32_OUT
C16 22p
Y2 8MHz
C17 22p
R32 390R
OSC_IN
OSC_OUT
SWD
TCK
TMS
NRST
Header 5
BUZZER
Buzzer1
Buzzer
R8 1k
R9 100k
T7 NMOS
D7
LED_RGB_6_PIN
R10 1k
R15 1k
R16 1k
C20 1uF
C21 1uF
C22 1uF
C23 1uF
C24 1uF
C25 1uF
C26 1uF
C27 1uF
C28 1uF
C29 1uF
C30 1uF
MOSI
MISO
SCK
NSS
L2 fbead
VDA
C18 10u
C19 1u/6V
V_PROT
C31 100pF
R2 150k
L4 470uH
C32 22uF
C33 22uF
C34 22uF
C35 22uF
C36 22uF
C37 22uF
C38 22uF
C39 22uF
D10 18V
R4 1k
T6 IRLML2244
D9 SS26L
R5 100R
U14 MC34063A
C41 470pF
C40 4n7
R6 3k6
R7 1k2
R23 10k
R24 10k
I2C
SCL
SDA
ACC + GYRO
Header 4
U1
U3
U4
74HC541
Servo_PWM1
Servo_PWM2
Servo_PWM3
Servo_PWM4
Servo_PWM5
Servo_PWM6
Servo_PWM7
Servo_PWM8
Servo_PWM9
Servo_PWM10
Servo_PWM11
Servo_PWM12
Servo_PWM13
Servo_PWM14
Servo_PWM15
Servo_PWM16
Servo_PWM17
Servo_PWM18
Digital_out_1
Digital_out_2
Digital_out_3
Digital_out_4
Digital_out_5
Digital_out_6
Header 3
P1
P3
P4
P5
P7
P8
P9
P10
EXT_AD
Analog
Servo_singnal_in
RC receiver
Designator
Hexapod_servo_AD
LEG_1
LEG_2
LEG_3
LEG_4
LEG_5
LEG_6
Bluetooth1
UC_2_BT
BT_2_UC
RX
TX
Bluetooth
Header 4
Title
Size
A3
Number
Revision
Date:
2013.11.20.
Sheet of
File:
E:\pcbdesigns\..\Hexapod_motherboard.SchDoc
Drawn By:

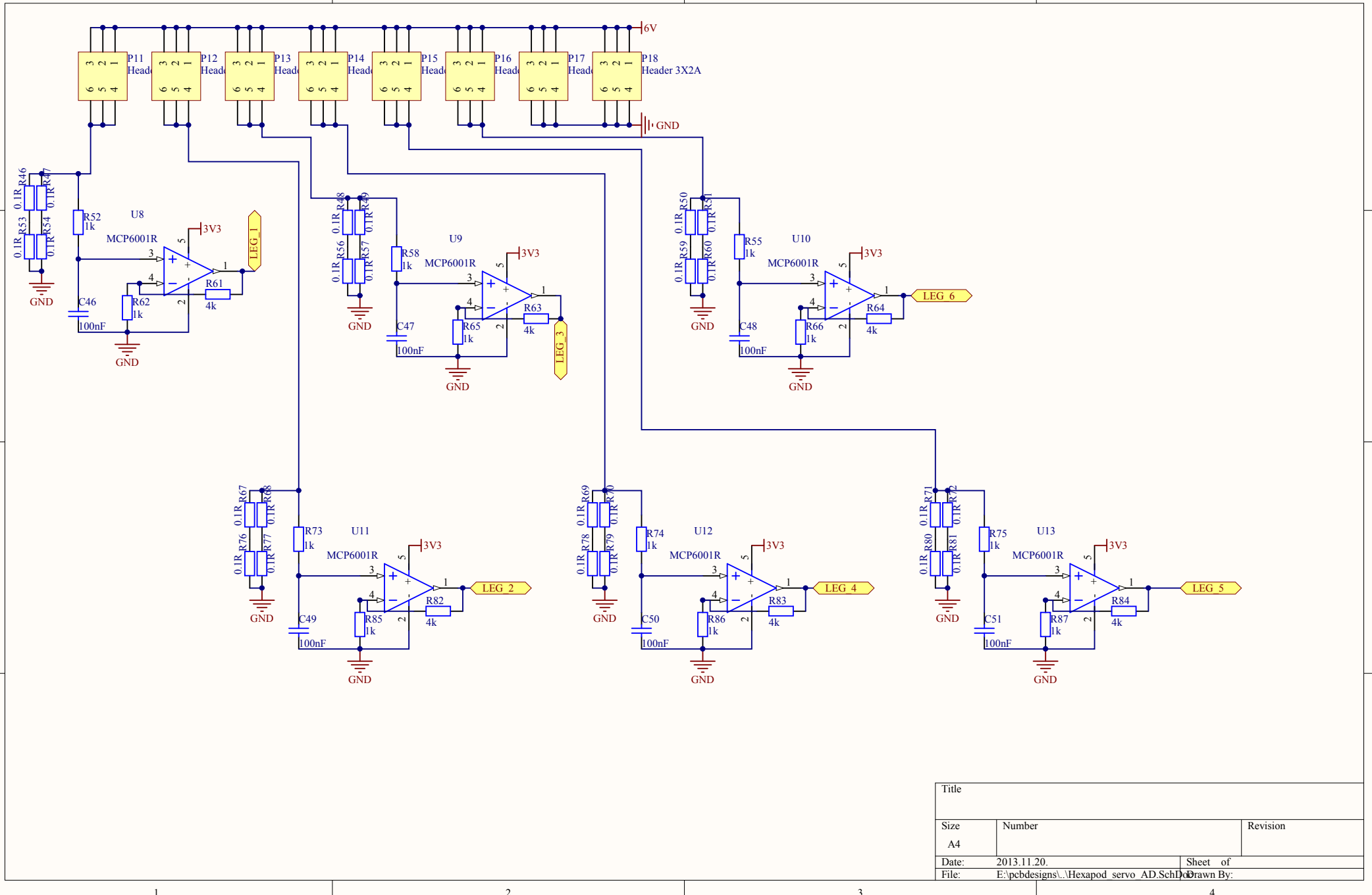
6V
GND
P11 Header 3X2A
P12 Header 3X2A
P13 Header 3X2A
P14 Header 3X2A
P15 Header 3X2A
P16 Header 3X2A
P17 Header 3X2A
P18 Header 3X2A
U8
U9
U10
U11
U12
U13
MCP6001R
3V3
LEG_1
LEG_2
LEG_3
LEG_4
LEG_5
LEG_6
R46 0.1R
R47 0.1R
R48 0.1R
R49 0.1R
R50 0.1R
R51 0.1R
R53 0.1R
R54 0.1R
R56 0.1R
R57 0.1R
R59 0.1R
R60 0.1R
R67 0.1R
R68 0.1R
R69 0.1R
R70 0.1R
R71 0.1R
R72 0.1R
R76 0.1R
R77 0.1R
R78 0.1R
R79 0.1R
R80 0.1R
R81 0.1R
R52 1k
R55 1k
R58 1k
R61 4k
R62 1k
R63 4k
R64 4k
R65 1k
R66 1k
R73 1k
R74 1k
R75 1k
R82 4k
R83 4k
R84 4k
R85 1k
R86 1k
R87 1k
C46 100nF
C47 100nF
C48 100nF
C49 100nF
C50 100nF
C51 100nF
Title
Size A4
Number
Revision
Date: 2013.11.20.
Sheet of
File: E:\pcbdesigns\..\Hexapod_servo_AD.SchDoc
Drawn By:

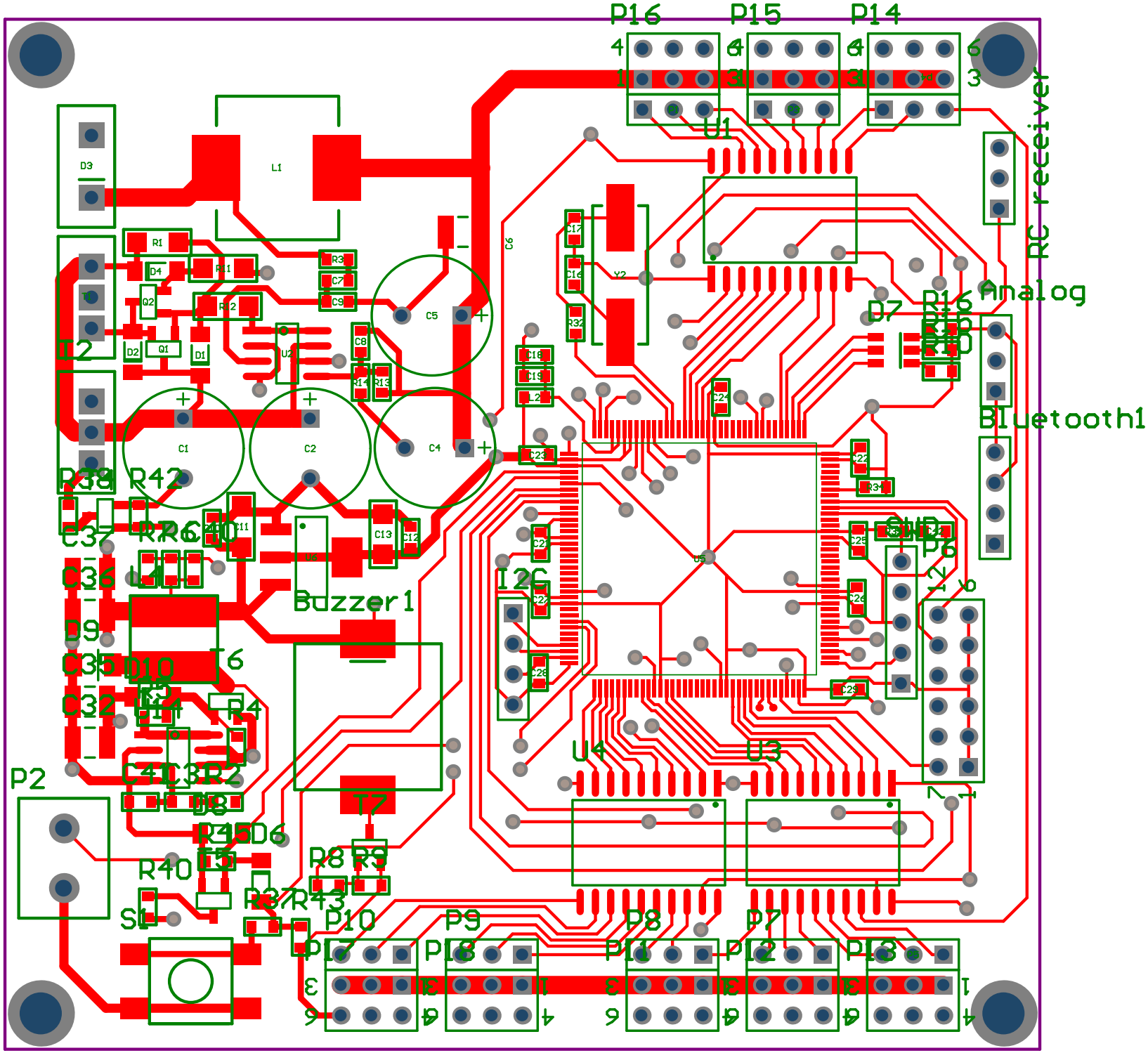
P16
P15
P14
U1
RC receiver
Analog
Bluetooth1
Buzzer1
I2C
U4
U3
P2
P10
P9
P8
P7
P17
P18
P11
P12
P13
S1
R40
R8
R9
R37
R43
R38
R42
C37
C36
C35
C32
D9
D10
D6
D7
L1
C1
C2
C4
C5
C6
C8
C9
C11
C12
C13
C17
C16
C18
C19
C21
C22
C23
C24
C25
C26
C27
C28
C29
R1
R2
R3
R4
R5
R6
R7
R8
R9
R10
R11
R12
R13
R14
R15
R16
R32
R34
D1
D2
D3
D4
Q1
Q2
U2
U3
U4
U5
U6
Y2
T6
T7

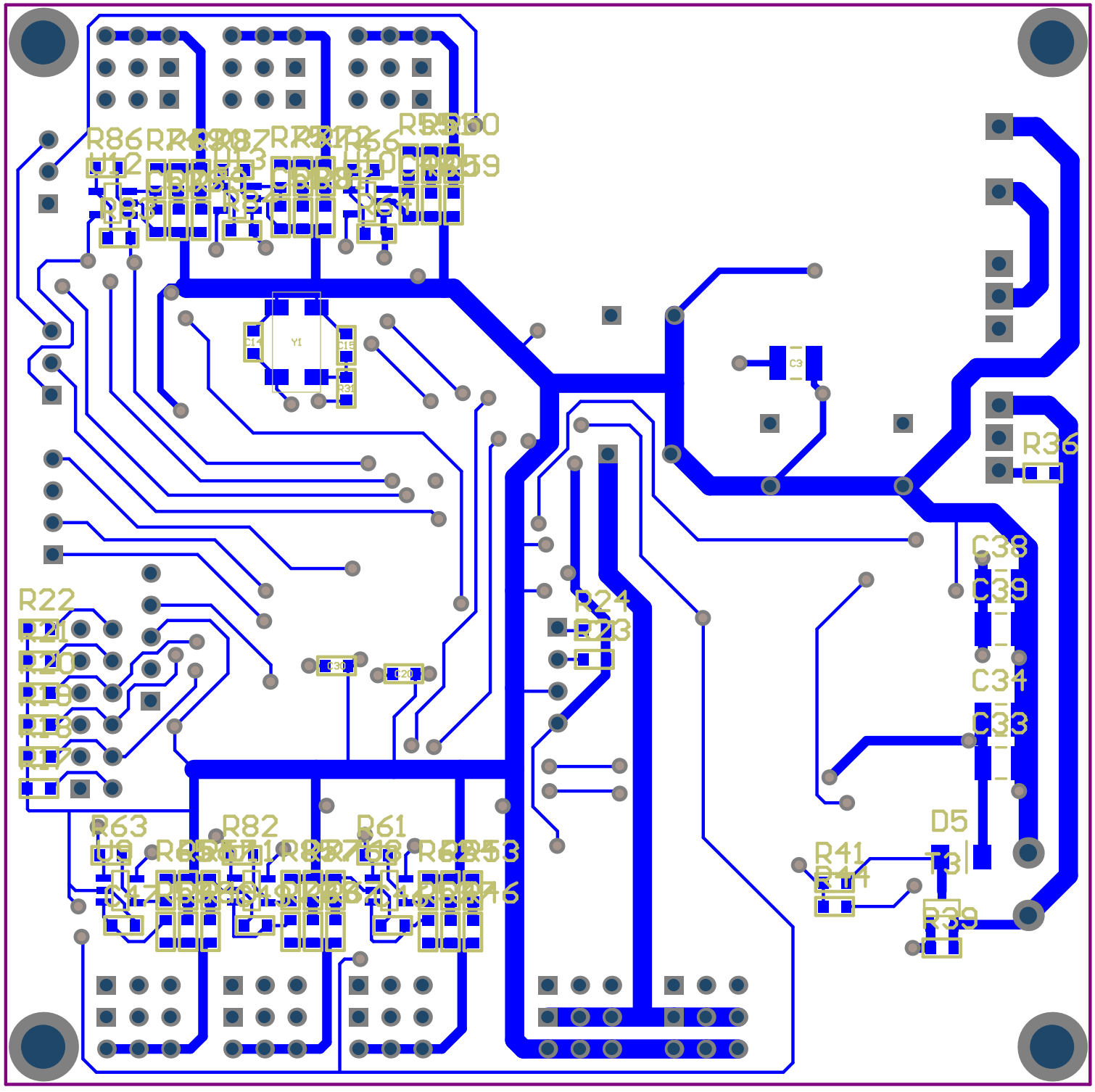
R86
U12
R31
R64
Y1
C14
C15
R31
C3
R36
C38
C39
C34
C33
R22
R21
R20
R19
R18
R17
R24
R23
C30
C20
R63
R82
R61
D5
R41
R44
R39

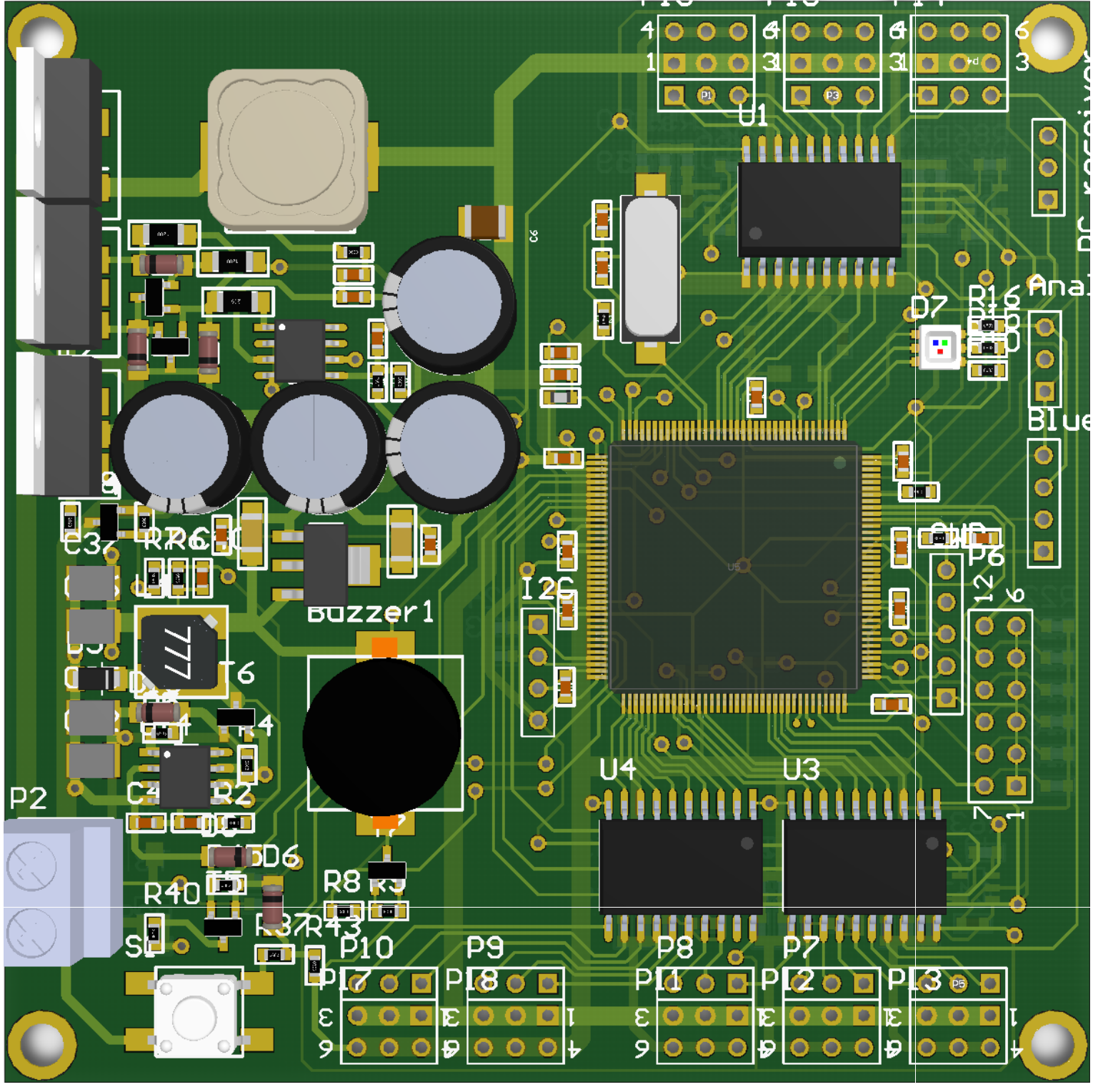
U1
D7
R16
Blue
P6
I2C
Buzzer1
777
T6
R4
C4
R2
P2
D6
R40
R8
R43
P10
P9
P8
P7
P17
P18
P11
P12
P13
U4
U3

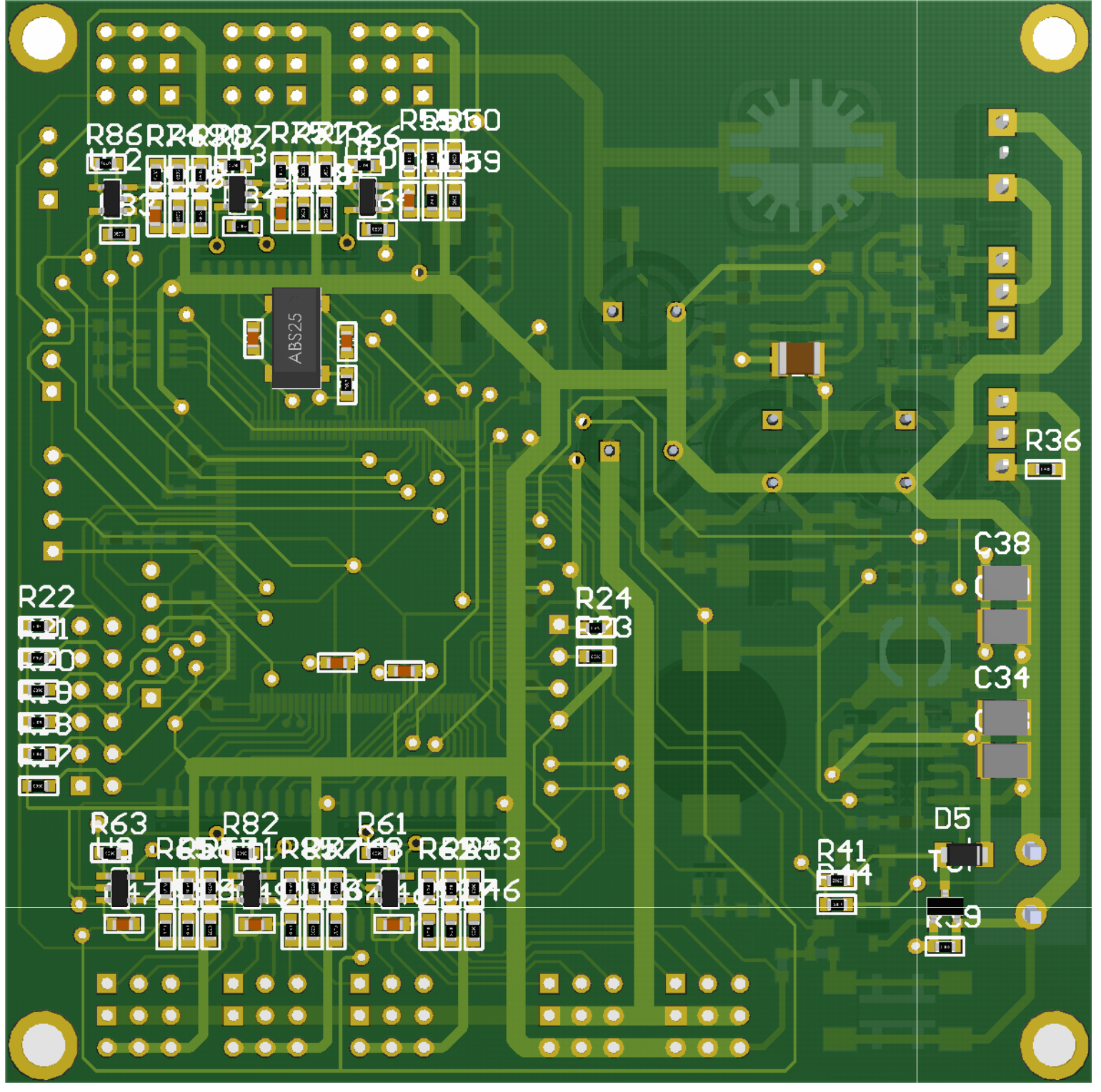
R86
ABS25
R36
C38
R22
R24
C34
R63
R82
R61
D5
R41

Comment	Description	Designator	Footprint	LibRef	Order info	Quantity
Header 3	Header, 3-Pin	Analog, P1, P3, P4, P5, P7, P8, P9, P10, RC receiver	HDR1X3	Header 3		10
Header 4	Header, 4-Pin	Bluetooth1, I2C	HDR1X4	Header 4		2
Buzzer	buzzer	Buzzer1	SMD Buzzer	Buzzer	http://www.digikey.com/product-detail/en/CD-1206-SMT/102-1150-ND/412409	1
1000uF	Polarized Capacitor	C1, C2, C4, C5	cap_10x12	CAP_ELECT		4
22uF	Capacitor	C3, C6	FP_1210_CAP_N	CAP	http://www.tme.eu/hu/details/ct32a226kojnnne/mlcc-smd-1210-kondenzatorok/samsung/	2
100pF	Capacitor	C7, C31	FP_0603_CAP_080	Cap	L: 82-02-26	2
4n7	Capacitor	C8, C40	FP_0603_CAP_080	Cap	TODO	2
470pF	Capacitor	C9, C41	FP_0603_CAP_080	Cap	82-02-34	2
100nF	Capacitor	C10, C12, C42, C46, C47, C48, C49, C50, C51	FP_0603_CAP_080	Cap	TODO	9
10uF	Capacitor	C11, C13	FP_1206_CAP_085	Cap	82-07-81	2
12p	Capacitor	C14, C15	FP_0603_CAP_080	Cap	TODO	2
22p	Capacitor	C16, C17	FP_0603_CAP_080	Cap	TODO	2
10n	Capacitor	C18	FP_0603_CAP_080	Cap		1
1u 6V	Capacitor	C19	FP_0603_CAP_080	Cap		1
1uF	Capacitor	C20, C21, C22, C23, C24, C25, C26, C27, C28, C29, C30	FP_0603_CAP_080	Cap		11
22uF	Capacitor	C32, C33, C34, C35, C36, C37, C38, C39	C1210_N	CAP	http://www.tme.eu/hu/details/ct32a226kojnnne/mlcc-smd-1210-kondenzatorok/samsung/	8
18V	Zener Diode	D1, D2, D4, D10	SOD-80	ZENER	L: 85-01-29	4
SCHOTTKY	NXP - PMEG3020EJ,115 - SCHOTTKY RECT 30V 2A SOD323F	D3	DIODE_TO220	SCHOTTKY		1
SS26L	NXP - PMEG3020EJ,115 - SCHOTTKY RECT 30V 2A SOD323F	D5, D9	subsma	SCHOTTKY	L: 83-02-21	2
LL4148		D6	SOD-80	DIODE_big		1
LED_RGB_6_PIN	LED_RGB_6_PIN	D7	LED_PLCC-6	LED_RGB_6_PIN	http://it.mouser.com/ProductDetail/OSRAM-Opto-Semiconductors/LRTBGFTM-ST7-1+VV9-29+Q5R/?qs=sGAEpiMZZMvyj6n1w4pZDi%2ff%252bBTIkxpNpOowvvOydA0%3d	1
ZENER 3V3	Zener Diode	D8	sod-80	ZENER		1
100uH		L1	SRR1206_T	L	RET: 77-01-48 // lomex: 93-03-38	1
fbead	FBEAD	L2	FP_0603_IND	Inductor		1
470uH		L4	INDUCTOR_6,6X6,6 mm	L	RET: 77-01-48 // lomex: 93-03-38	1
Header 2	Header, 2-Pin	P2	Solkapocs 2P 5mm	Header 2		1
Header 6X2A	Header, 6-Pin, Dual row	P6	HDR2X6_CEN	Header 6X2A		1
Header 3X2A	Header, 3-Pin, Dual row	P11, P12, P13, P14, P15, P16, P17, P18	HDR2X3_CEN	Header 3X2A		8
NPN		Q1	TR_SOT23	NPN		1
PNP		Q2	TR_SOT23	PNP		1
1k	Resistor	R1	FP_1206_RES	Res3	TODO	1
150k	Resistor	R2, R3	FP_0603_RES	Res3	TODO	2
1k	Resistor	R4, R8, R10, R15, R16, R38, R40, R52, R55, R58, R62, R65, R66, R73, R74, R75, R85, R86, R87	FP_0603_RES	Res3	TODO	19
100R	Resistor	R5	FP_0603_RES	Res3	TODO	1
3k6	Resistor	R6, R13	FP_0603_RES	Res3	80-14-47	2
1k2	Resistor	R7, R14	FP_0603_RES	Res3	80-13-54	2
100k	Resistor	R9, R36, R39, R42, R43, R45	FP_0603_RES	Res3		6
220R	Resistor	R11	FP_1206_RES	Res3	TODO	1
100R	Resistor	R12	FP_1206_RES	Res3	TODO	1
10k	Resistor	R17, R18, R19, R20, R21, R22, R23, R24, R34, R35, R37, R41, R44	FP_0603_RES	Res3	80-13-54, TODO	13
390R	Resistor	R31, R32	FP_0603_RES	Res3	TODO	2
0.1R	Resistor	R46, R47, R48, R49, R50, R51, R53, R54, R56, R57, R59, R60, R67, R68, R69, R70, R71, R72, R76, R77, R78, R79, R80, R81	FP_0603_RES	Res3		24
4k	Resistor	R61, R63, R64, R82, R83, R84	FP_0603_RES	Res3		6
Button	Switch	S1	BUTTON_6X6 _SMD	SW-PB	http://www.tme.eu/hu/details/tactm-67n-f/tact-pcb-mikrokapcsolok/ninigi/#	1
Header 5	Header, 5-Pin	SWD	HDR1X5	Header 5		1
IRF4905		T1, T2	FET_TO220	PMOS	mouser: 512-NDT2955	2
IRLML2244		T3, T6	FET_SOT23	PMOS		2
NMOS		T4, T5, T7	FET_SOT23	NMOS		3
74HC541	Octal buffer 3-state line driver	U1, U3, U4	DIGITAL_SOIC20W	74HC541		3
MC34063A		U2, U14	FP_SO8_MS012AA	MC34063A	mouser: 595-MC34063ADR	2
STM32F103Z*		U5	LQFP144	STM32F103Zxxx		1
LD1117xx	LD1117xx 3,3V lin reg	U6	SUPPLY_SOT223	LD1117xx	http://hu.mouser.com/ProductDetail/NXP/NX1117C3Z115/?qs=%2fha2pyFaduiB%252bOpsKr9NI%2fhvfdvgCMvN%252bF0NTwqG%252bWOJY%3d	1
MCP6001R		U8, U9, U10, U11, U12, U13	ANALOG_SOT23-5	MCP6001R		6
Quartz 32.768 kHz	XTAL_32.768kHz ABS25 SMD	Y1	XTAL_ABS25	XTAL_32.768kHz ABS25 SMD	ugyanaz mint a feden	1
8MHz Quartz HC49	Standard HC49 quartz	Y2	FP_CRYSTAL_HC49	XTAL HC49	ugyanaz mint a feden	1