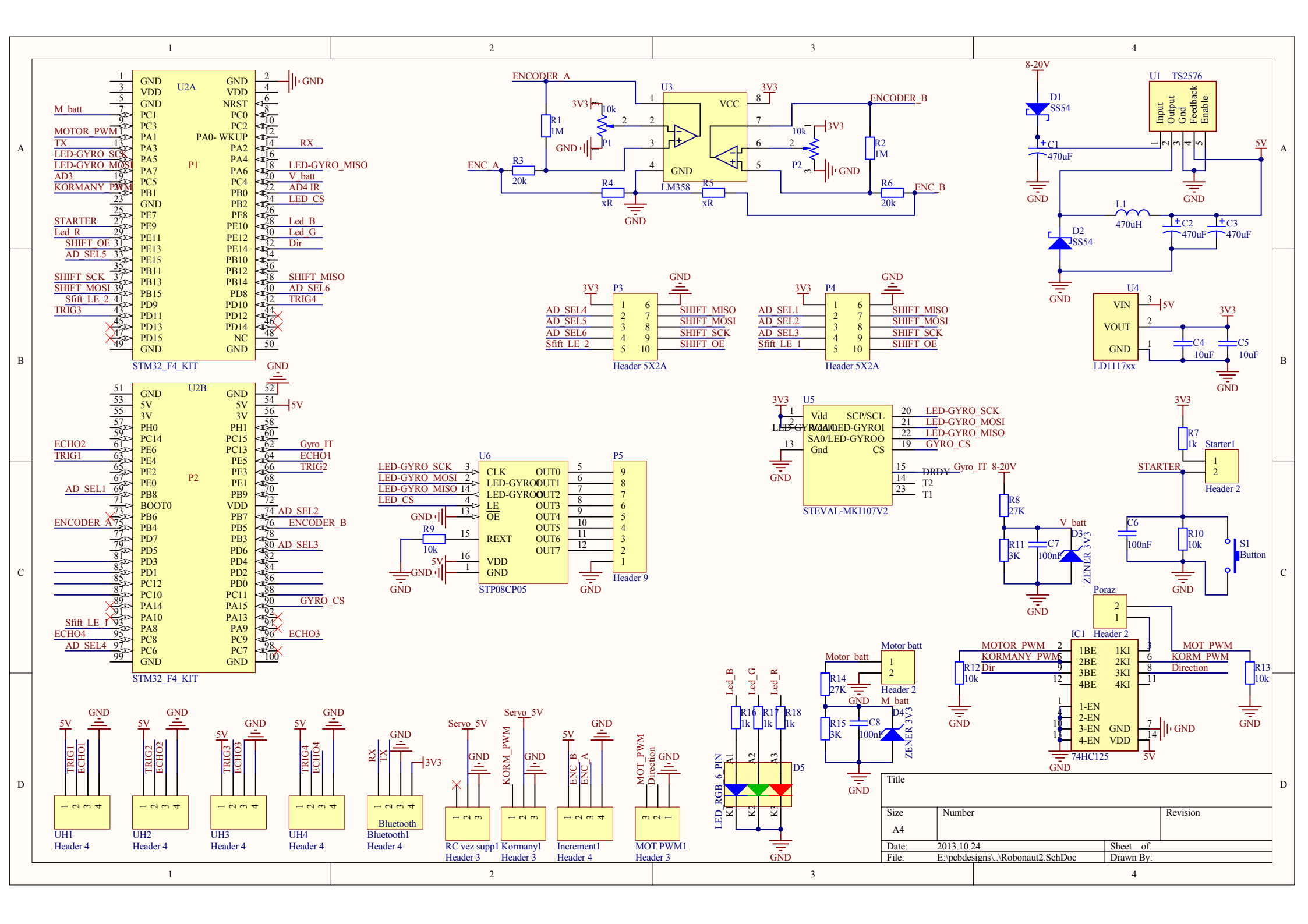
U2A
STM32_F4_KIT
U2B
STM32_F4_KIT
P1
P2
M_batt
MOTOR_PWM
TX
LED-GYRO_SCK
LED-GYRO_MOSI
AD3
KORMANY_PWM
STARTER
Led_R
SHIFT_OE
AD_SEL5
SHIFT_SCK
SHIFT_MOSI
Sfift_LE_2
TRIG3
ECHO2
TRIG1
AD_SEL1
ENCODER_A
Sfift_LE_1
ECHO4
AD_SEL4
RX
LED-GYRO_MISO
V_batt
AD4 IR
LED_CS
Led_B
Led_G
Dir
SHIFT_MISO
AD_SEL6
TRIG4
Gyro_IT
ECHO1
TRIG2
AD_SEL2
ENCODER_B
AD_SEL3
GYRO_CS
ECHO3
ENCODER_A
ENC_A
R1 1M
R2 1M
R3 20k
R4 xR
R5 xR
R6 20k
P1 10k
P2 10k
U3
LM358
ENCODER_B
ENC_B
P3
P4
Header 5X2A
AD_SEL4
AD_SEL5
AD_SEL6
Sfift_LE_2
AD_SEL1
AD_SEL2
AD_SEL3
Sfift_LE_1
SHIFT_MISO
SHIFT_MOSI
SHIFT_SCK
SHIFT_OE
U6
STP08CP05
P5
Header 9
R9 10k
U5
STEVAL-MKI107V2
Vdd
SCP/SCL
SA0/LED-GYROO
Gnd
CS
DRDY
T2
T1
LED-GYRO_SCK
LED-GYRO_MOSI
LED-GYRO_MISO
GYRO_CS
Gyro_IT
8-20V
D1 SS54
C1 470uF
U1 TS2576
Input
Output
Gnd
Feedback
Enable
L1 470uH
C2 470uF
C3 470uF
D2 SS54
U4
LD1117xx
VIN
VOUT
GND
C4 10uF
C5 10uF
5V
3V3
R7 1k
Starter1
Header 2
R8 27K
R11 3K
C7 100nF
D3 ZENER 3V3
V_batt
C6 100nF
R10 10k
S1 Button
Poraz
IC1 Header 2
74HC125
1BE
2BE
3BE
4BE
1KI
2KI
3KI
4KI
1-EN
2-EN
3-EN
4-EN
MOT_PWM
KORM_PWM
Direction
R12 10k
R13 10k
R14 27K
R15 3K
C8 100nF
D4 ZENER 3V3
Motor_batt
M_batt
Led_B
Led_G
Led_R
R16 1k
R17 1k
R18 1k
D5
LED_RGB_6_PIN
UH1
UH2
UH3
UH4
Header 4
Bluetooth1
RC vez supp1
Kormany1
Increment1
MOT PWM1
Header 3
Servo_5V
KORM_PWM
ENC_B
ENC_A
MOT_PWM
Direction
Title
Size
A4
Number
Revision
Date:
2013.10.24.
Sheet of
File:
E:\pcbdesigns\..\Robonaut2.SchDoc
Drawn By:

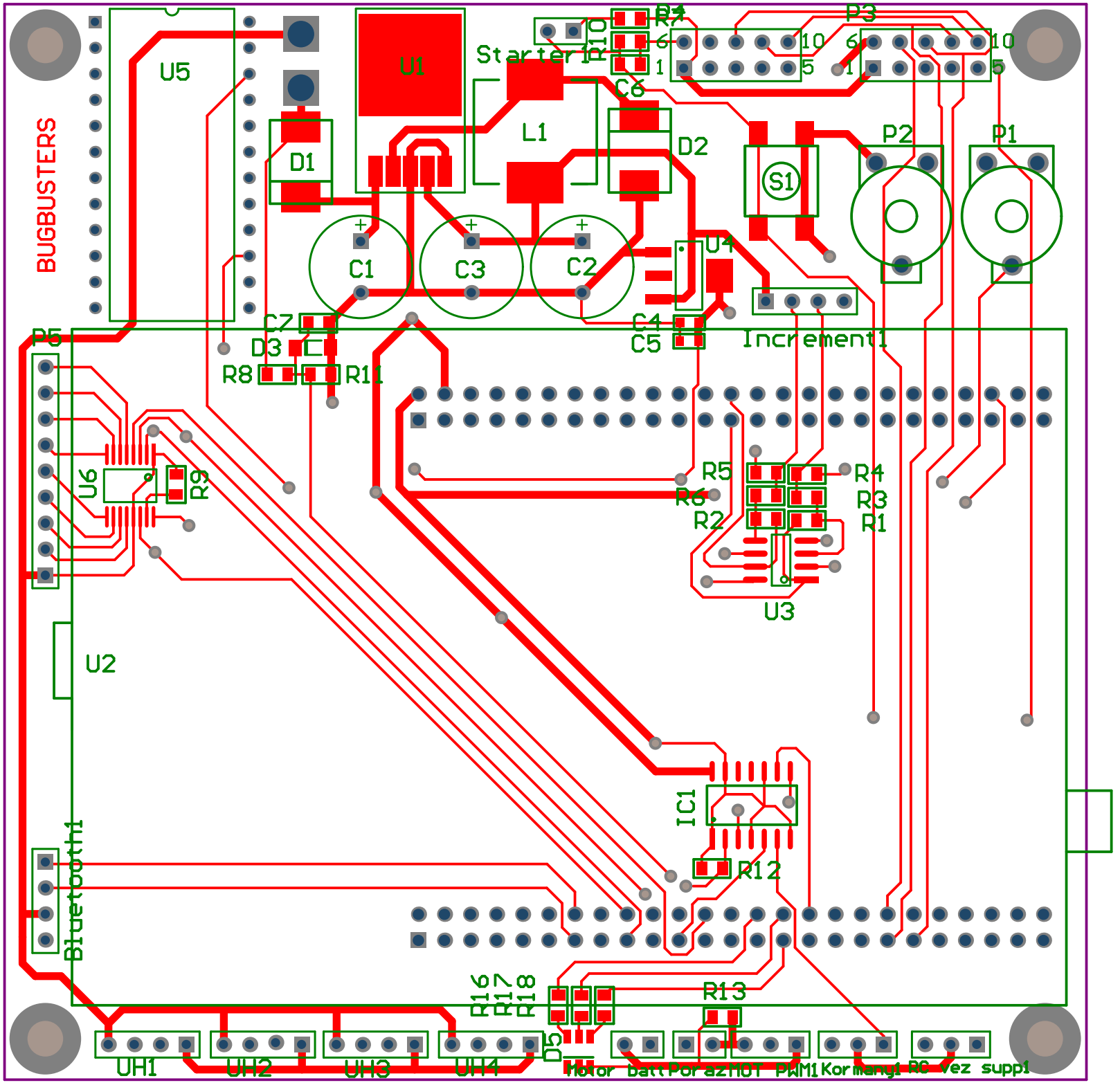
BUGBUSTERS
U5
U1
Starter1
R10
R7
P3
C6
L1
D1
D2
S1
P2
P1
C1
C3
C2
U4
C4
C5
Increment1
C7
D3
R8
R11
P5
U6
R9
R5
R4
R6
R3
R2
R1
U3
U2
IC1
R12
Bluetooth1
R16
R17
R18
R13
D5
UH1
UH2
UH3
UH4
Motor
Batt
Porazhot
PWM1
Kormang1
RC
Vez
supp1

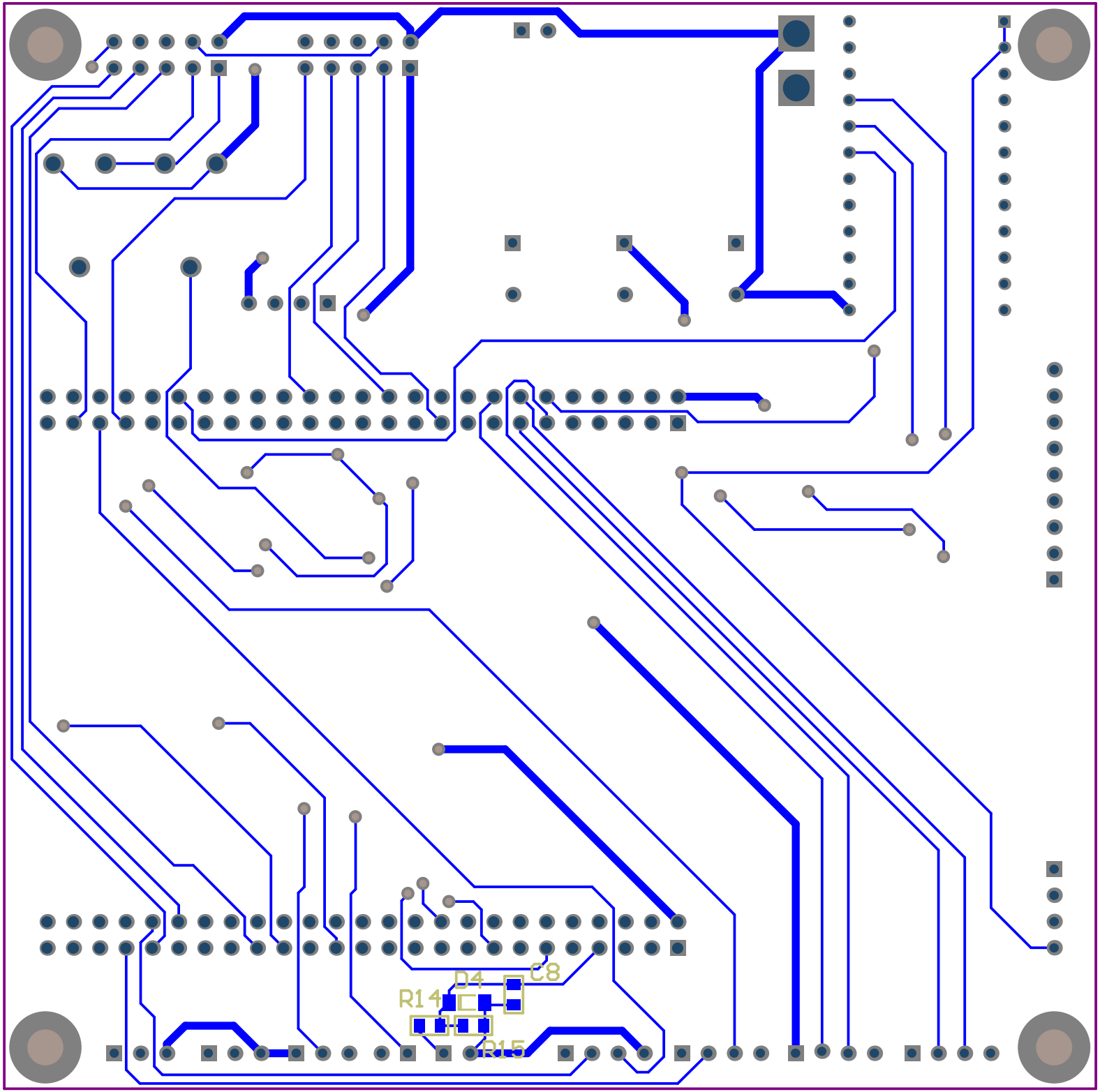
D4
C8
R14
R15

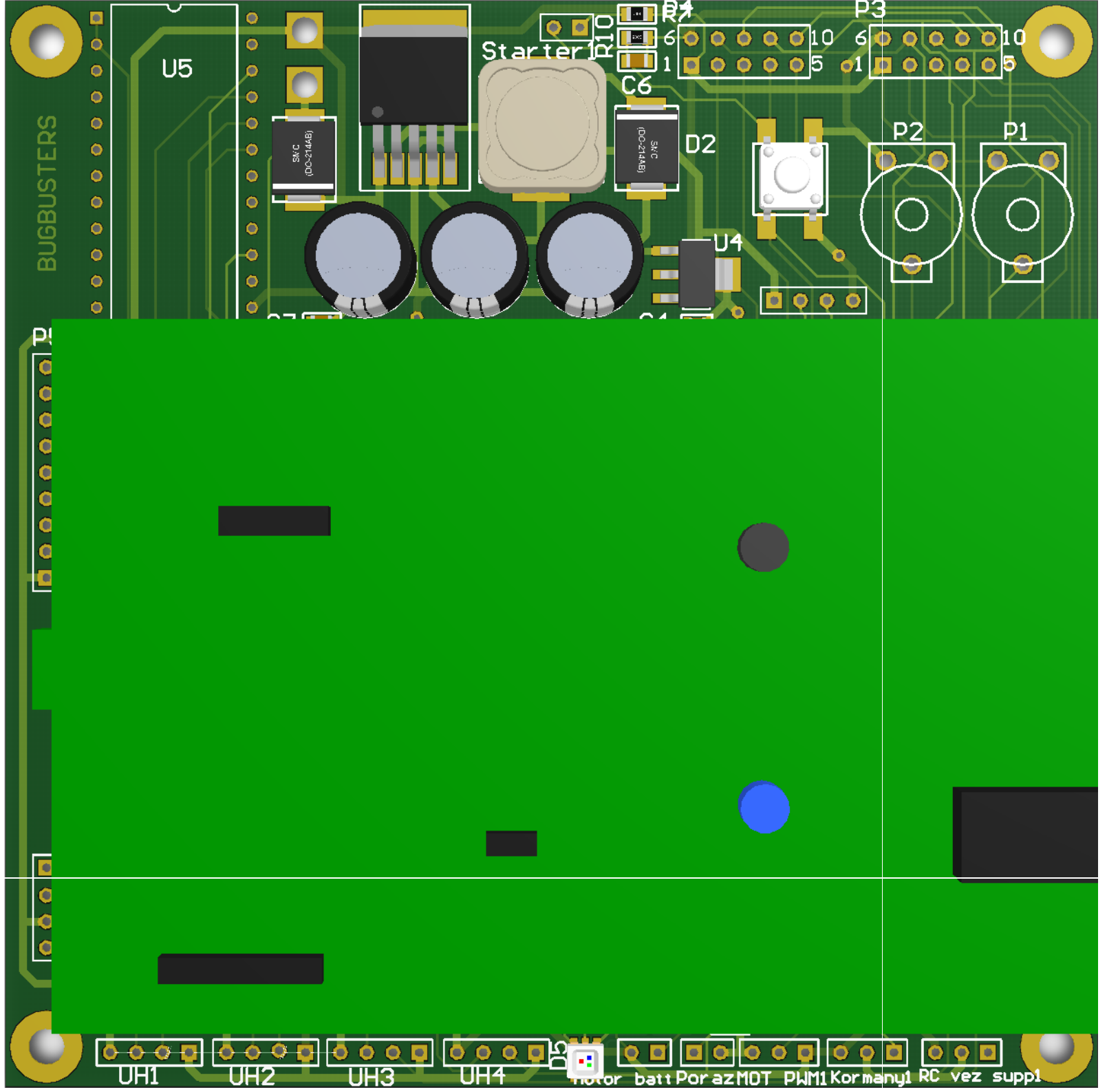
U5
BUGBUSTERS
Starter
R10
R4
C6
D2
P3
P2
P1
U4
UH1
UH2
UH3
UH4
D3
Motor
batt
Por az
MOT
PWM1
Kormany1
RC
vez
supp1

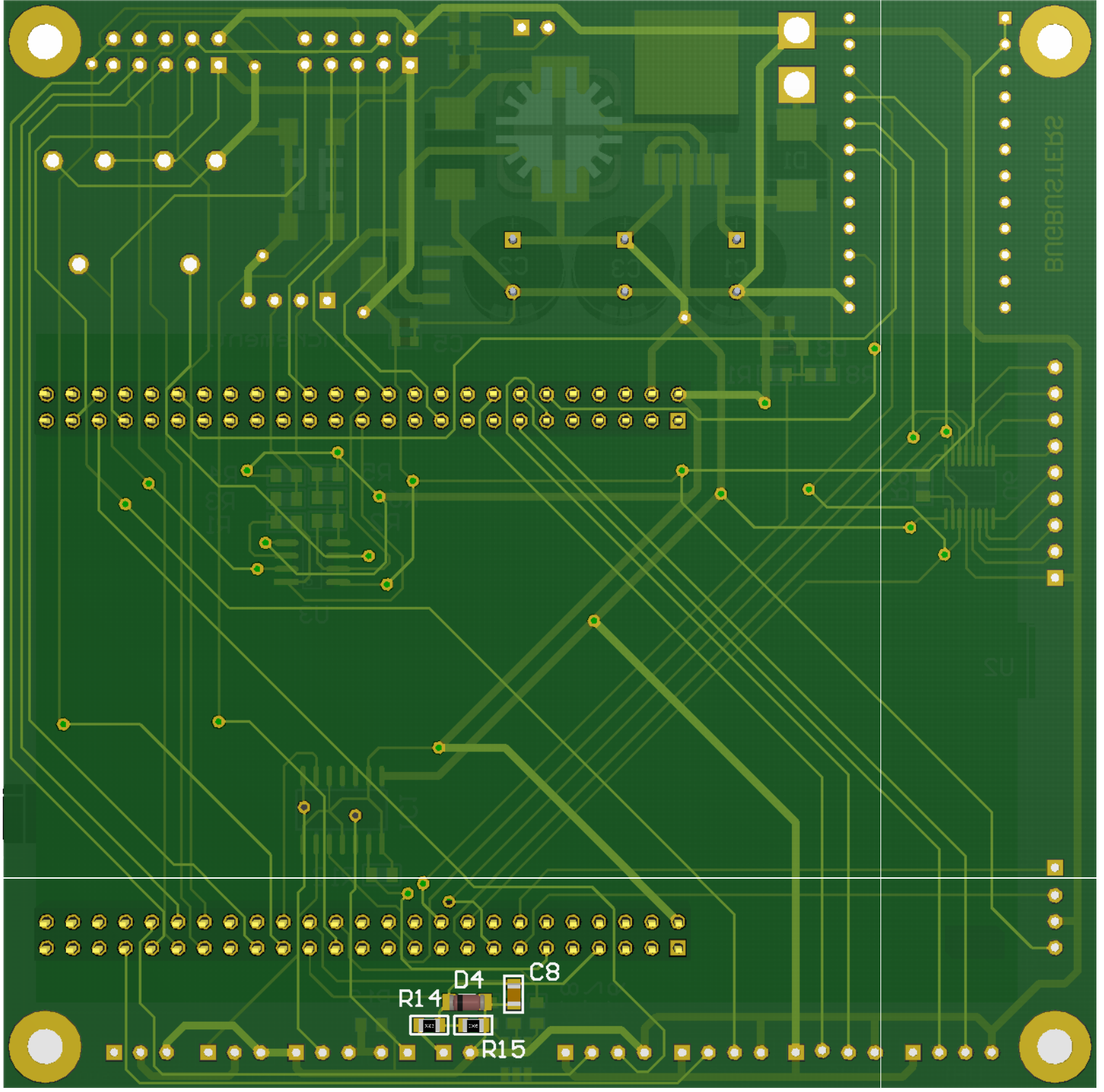
D4
C8
R14
R15

Comment	Description	Designator	Footprint	LibRef	Order info	Quantity
Header 4	Header, 4-Pin	Bluetooth1, Increment1, UH1, UH2, UH3, UH4	HDR1X4	Header 4		6
470uF	Polarized Capacitor	C1, C2, C3	cap_10x12	CAP_ELECT		3
10uF	Capacitor	C4, C5	FP_0603_CAP_080	Cap	82-07-81	2
100nF	Capacitor	C6, C7, C8	FP_0805_CAP_085	CAP		3
SS54	NXP - PMEG3020EJ,115 - SCHOTTKY RECT 30V 2A SOD323F	D1, D2	FP_SMA DO214AB	SCHOTTKY		2
ZENER 3V3	Zener Diode	D3, D4	sod-80	ZENER		2
LED_RGB_6_PIN	LED_RGB_6_PIN	D5	LED_PLCC-6	LED_RGB_6_PIN	http://it.mouser.com/ProductDetail/OSRAM-Opto-Semiconductors/LRTBGFTM-ST7-1+VV9-29+Q5R/?qs=sGAEpiMZZMvyj6n1w4pZD%2ffl%252b8TIkxpNpOowvvOydA0%3d	1
74HC125		IC1	Gate_SOIC14	74HC125		1
Header 3	Header, 3-Pin	Komany1, MOT PWM1, RC vez supp1	HDR1X3	Header 3		3
470uH		L1	SRR1206_T	L	RET: 77-01-48 // lomex: 93-03-38	1
Header 2	Header, 2-Pin	Motor batt, Poraz, Starter1	HDR1X2	Header 2		3
10k		P1, P2	Res Trimmer TH	POTI		2
Header 5X2A	Header, 5-Pin, Dual row	P3, P4	HDR2X5_CEN	Header 5X2A		2
Header 9	Header, 9-Pin	P5	HDR1X9	Header 9		1
1M	Resistor	R1, R2	FP_0805_RES	RES		2
20k	Resistor	R3, R6	FP_0805_RES	RES		2
xR	Resistor	R4, R5	FP_0805_RES	RES		2
1k	Resistor	R7, R16, R17, R18	FP_0805_RES	RES		4
27K	Resistor	R8, R14	FP_0805_RES	RES		2
10k	Resistor	R9, R10, R12, R13	FP_0805_RES	RES		4
3K	Resistor	R11, R15	FP_0805_RES	RES		2
Button	Switch	S1	BUTTON_6X6 _SMD	SW-PB	http://www.tme.eu/hu/details/tactm-67n-f/tact-pcb-mikrokapcsolok/ninigi/#	1
TS2576	5V 3A step down	U1	SUPPLY_TO-263 5	TS2576		1
STM32_F4_KIT	STM32 F4 Discovery Evaluation Kit	U2	FP_STM32F4DISC	STM32F4DISCOVERY		1
LM358	Low power dual operational amplifiers	U3	FP_SO8_MS012AA	LM358		1
LD1117xx	LD1117xx 3,3V lin reg	U4	SUPPLY_SOT223	LD1117xx	http://hu.mouser.com/ProductDetail/NXP/NX1117C33Z115/?qs=%2fha2pyFadui8%252bOpsKr9N%2fhvfdxjCMx%252bF0NTwqG%252bWOJY%3d	1
STEVAL-MKI107V2	Three-axis digital output gyroscope	U5	STEVAL-MKI107V2 DIL24 Adapter	STEVAL-MKI107V2		1
STP08CP05	8 channel constant cu	U6	TSSOP16	STP08CP05		1