COG			
WEIGHT(KG)	X	Y	Z
1763.0	1359.0	810.0	738.0

TERMINATION SCHEDULE

TIE-IN POINT(TP)	SIZE	CONN. TYPE	RATING	CL FLANGE FLANGE FACE X	Y	Z	FLANGE FACE DIRECTION	SERVICE
01	80(3")	RF	150	207(8")	530(1'-9")	472(1'-7")	W	PACKAGE INLET
02	80(3")	RF	150	2408(7'-11")	145(5.7")	472(1'-7")	E	PACKAGE OUTLET
03	50(2")	RF	150	207(8")	1550(5'-1")	472(1'-7")	W	OIL OUTLET
04	50(2")	RF	150	207(8")	1176(3'-10")	472(1'-7")	W	DRAIN
05	25(1")	RF	150	207(8")	850(2'-9")	472(1'-7")	W	INSTRUMENT AIR

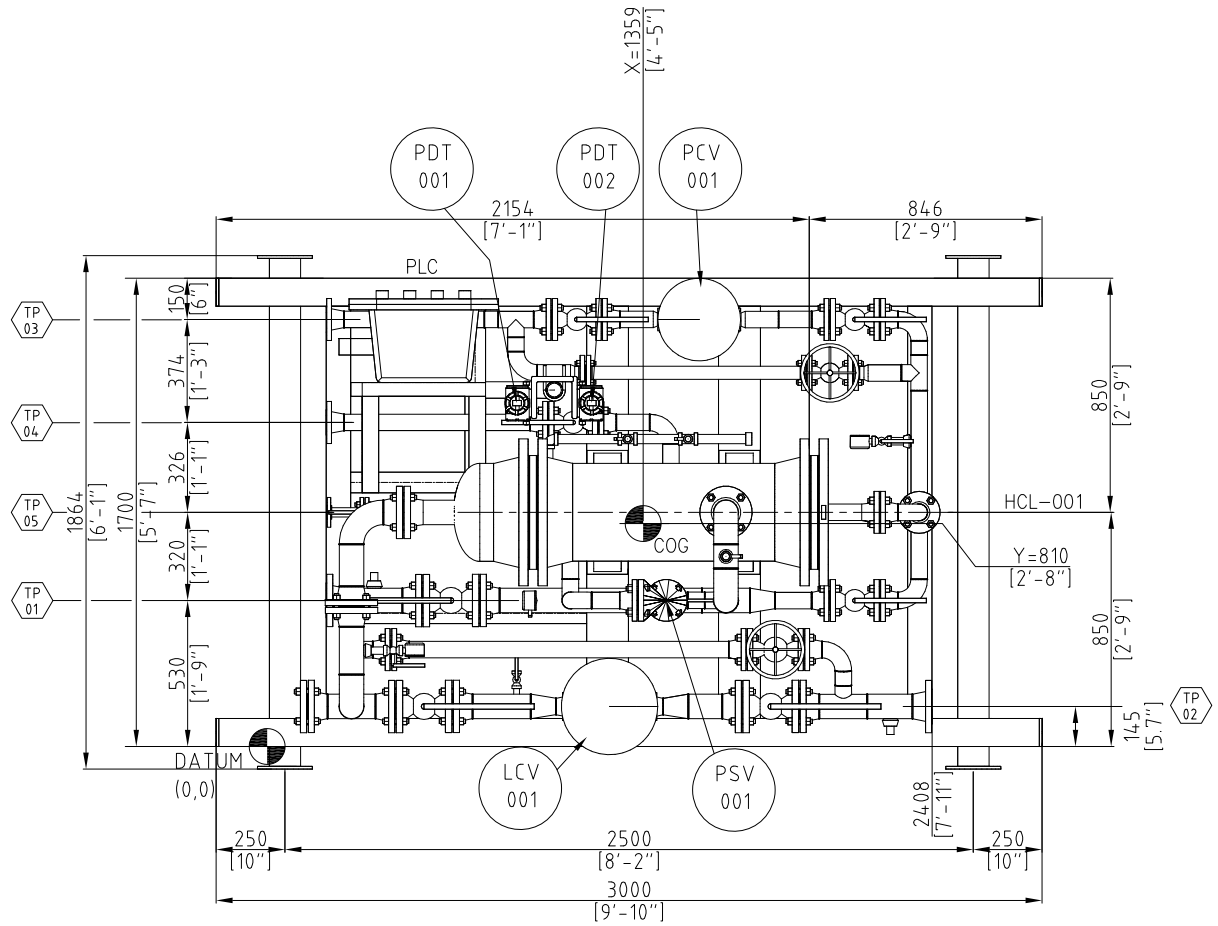

PLAN

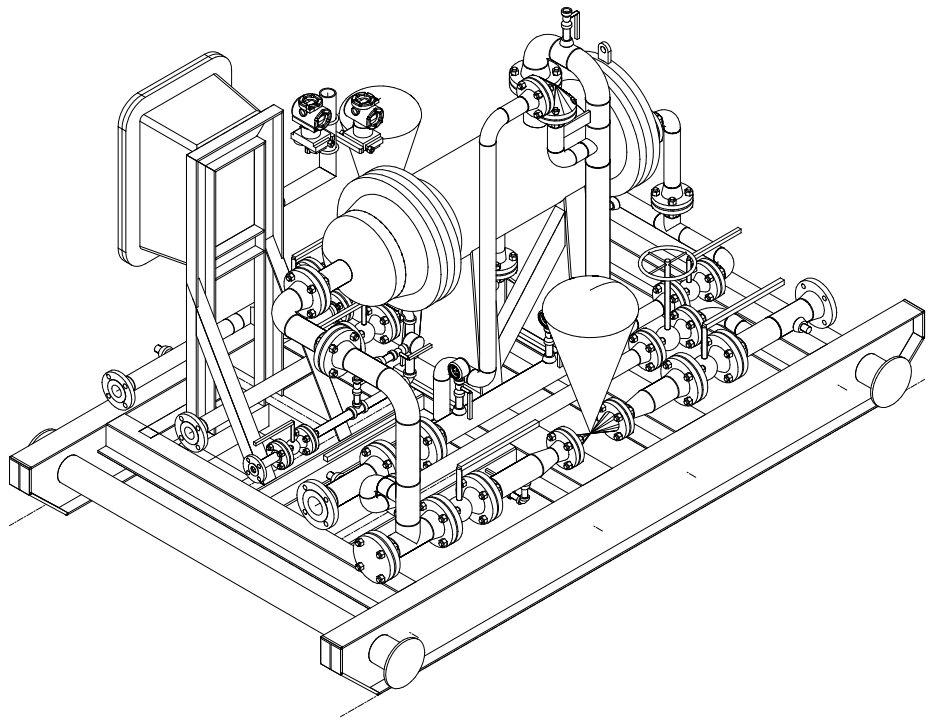

ISOMETRIC

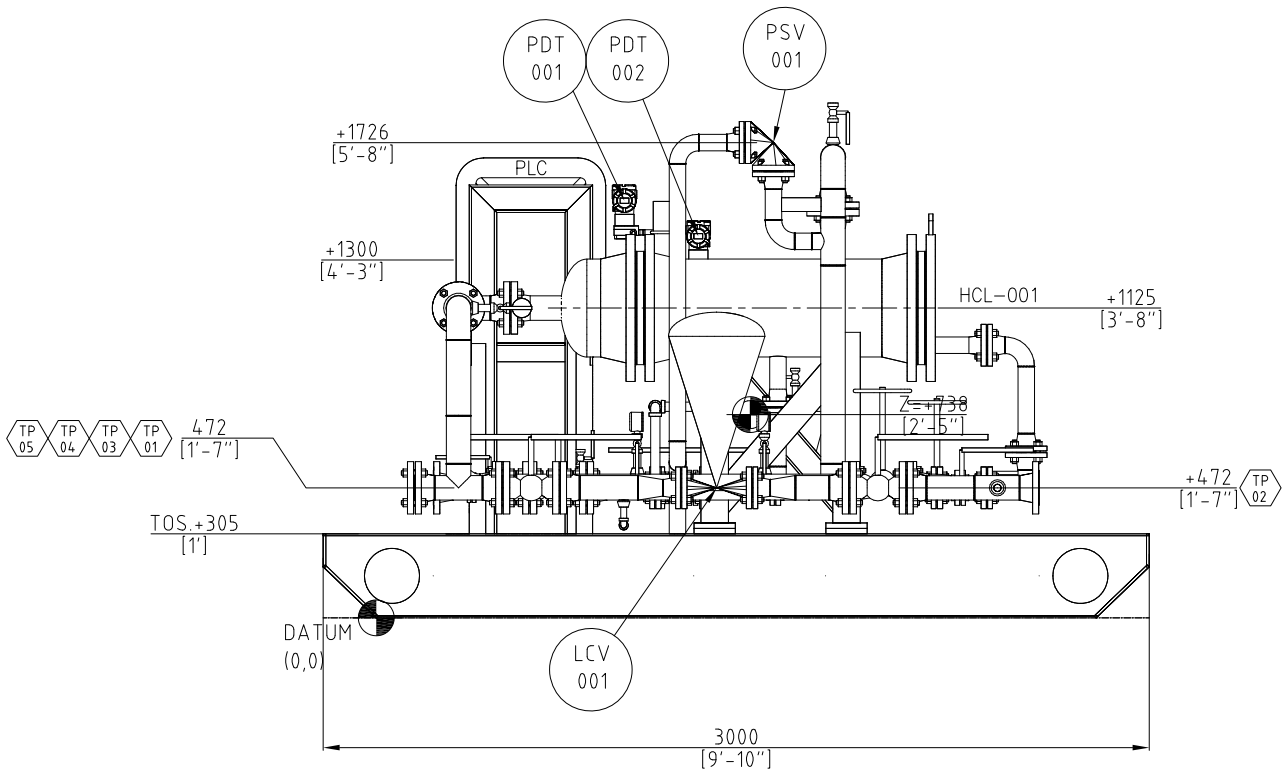

ELEVATION

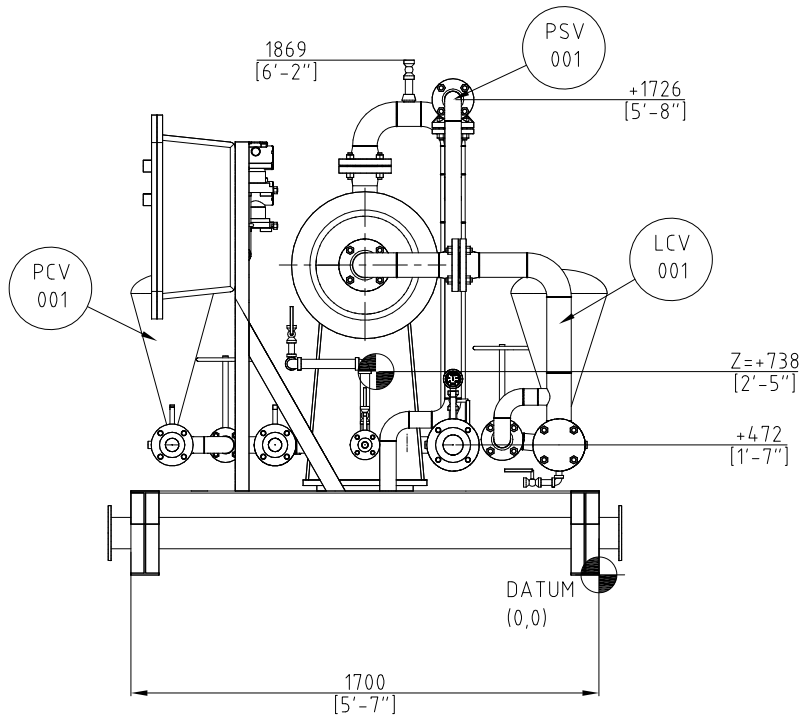

LEFT VIEW

NOTES

1. ALL DIMENSION IS IN MILLIMETER WITH ALTERNATE IMPERIAL UNITS

No.	DATE	REVISION DETAILS	BY	CHK	APPD
0	01JUN21	ISSUED FOR USE	RIC		
A	20JUL20	ISSUED FOR REVIEW	RIC		

REVISION

CHK | APPD

DIGITAL SIGNATURES

DWG No. | TITLE

REFERENCE DWG'S

CLIENT
-
ORDER No.
-
CLIENT DWG No.
-

SUEZ Oil & Gas Systems
SINGAPORE

COPYRIGHT RESERVED - THIS DRAWING IS THE PROPERTY OF SUEZ ENVIRONNEMENT CO. S.A. & IS NOT TO BE COPIED REPRODUCED OR USED FOR ANY MANUFACTURING OR LIKE PURPOSES WITHOUT WRITTEN PERMISSION FROM THE AFOREMENTIONED COMPANY.

CYCLONIXX & TUNGSTONE ARE REGISTERED TRADEMARKS OF SUEZ ENVIRONNEMENT CO. S.A.

PROJECT REFERENCE :
-

DWG TITLE

5.2 GENERAL ARRANGEMENT DRAWING
DEOILER HYDROCYCLONE(5000 BWPD)

SCALE(A2)	DO NOT SCALE DWG	DWG No.	REV.
NTS		CS-DOC-05K-GA-001	0