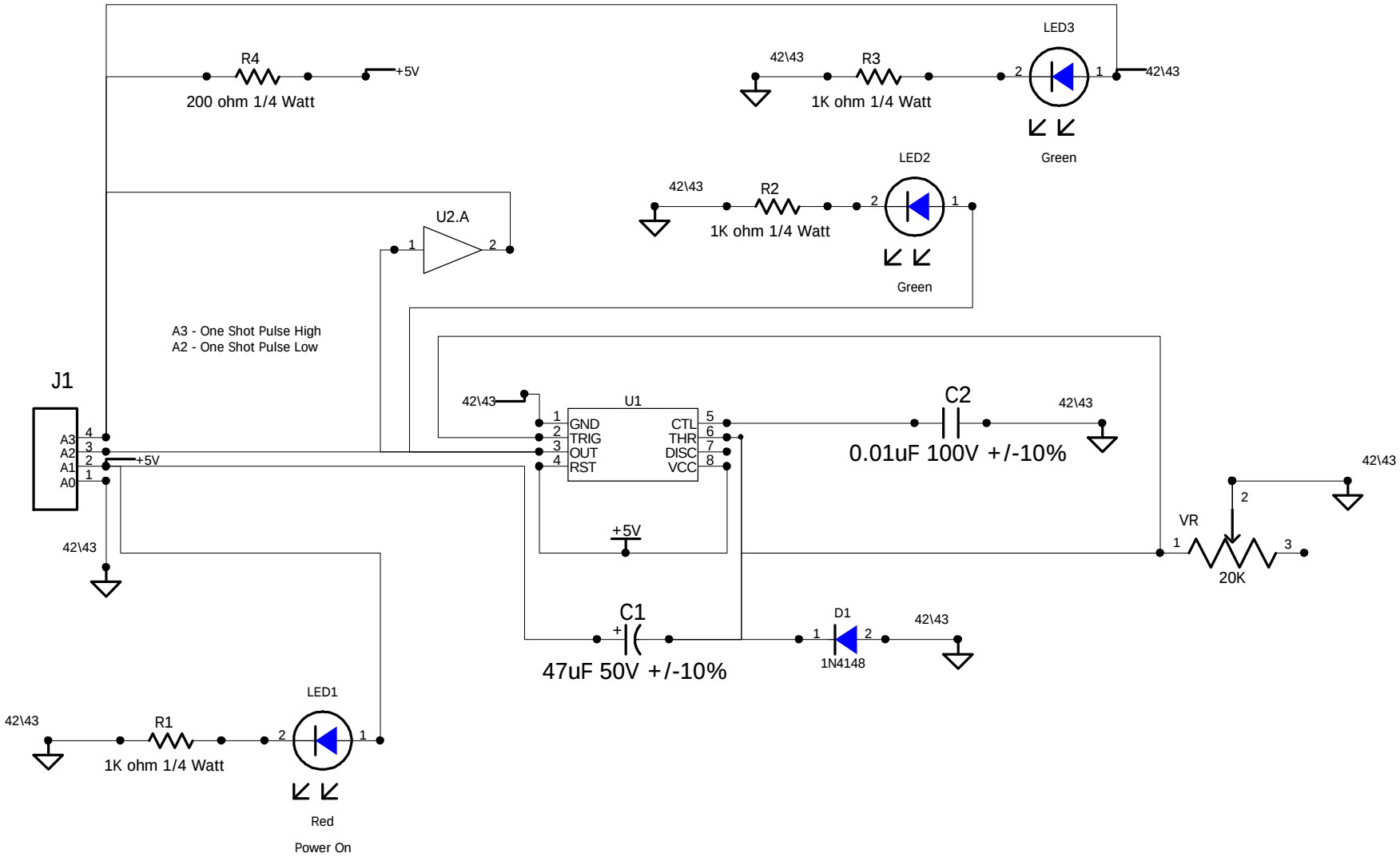

Kevin Eshbach Address 1 Address 2 Address 3		Power On Reset	
		DOC. NO. 0000-0000-00	REV. 1.0
CREATED	_SCHCREATEDATE	PAGE NAME Main Schematic	LAST REVISION _SCHREVDATE
AUTHOR			
APPROVED BY	_SCHAPPROVEDBY		
CHECKED BY	_SCHCHECKEDBY		PAGE 1 OF 2