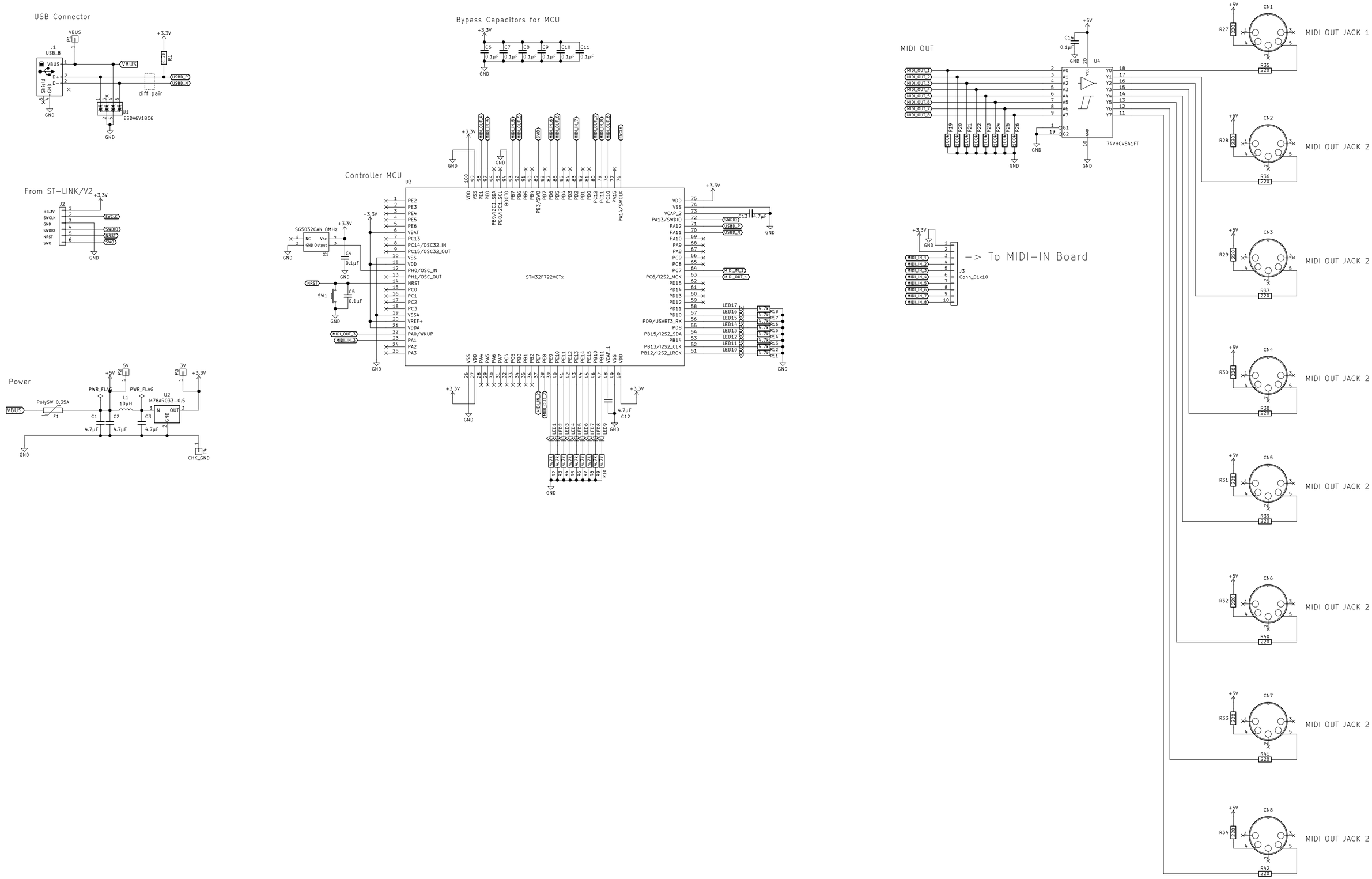

(c)keshikan
http://www.keshikan.net
twitter/@keshinomi_88pro

"CureMIDI8"	Sheet: 1/1
Date: 2019-01-14 (Rev:A1)	Tool: KiCad E.D.A. eeschema (5.0.0)

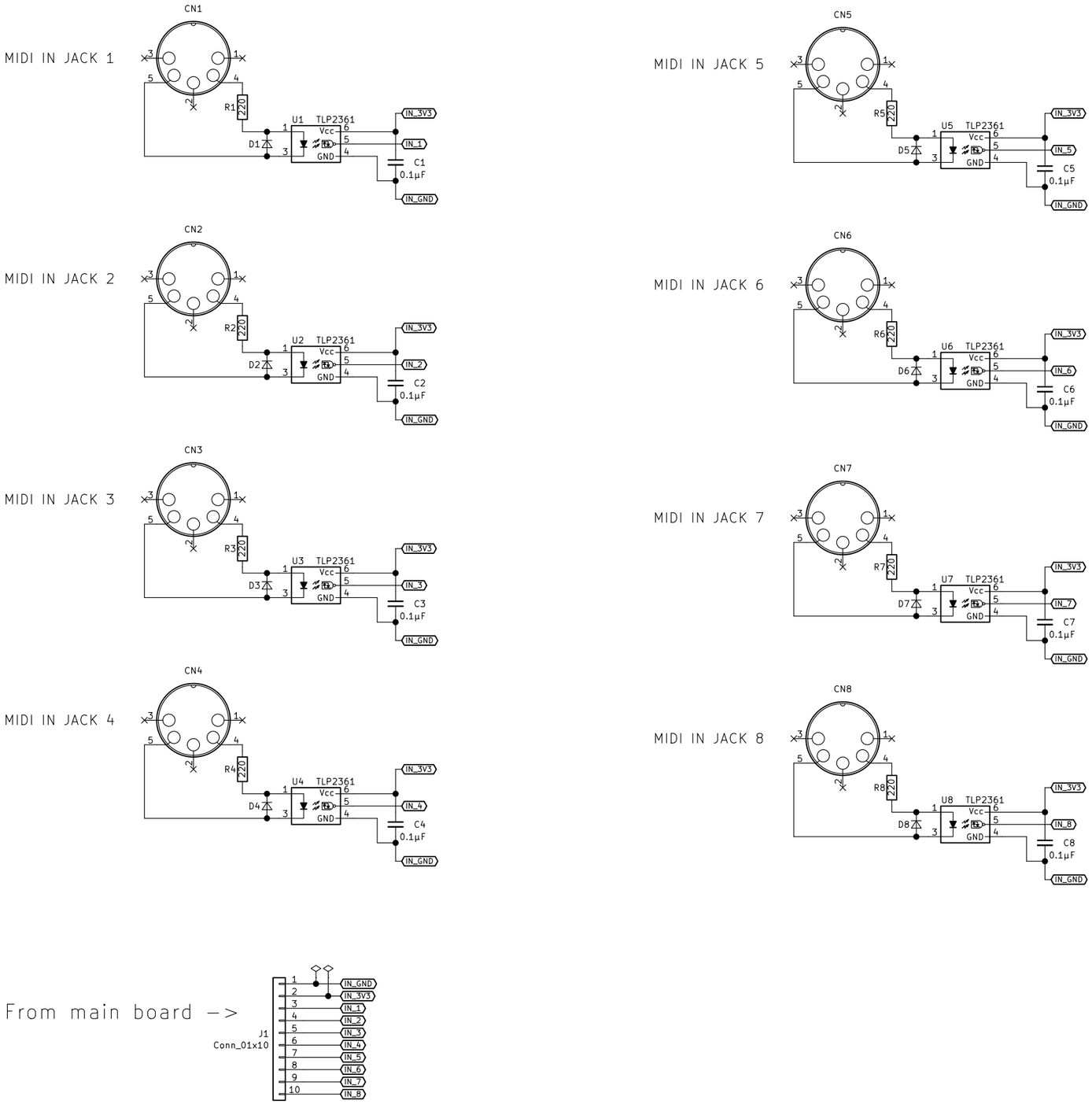

MIDI—IN Board

(c)keshikan
http://www.keshikan.net
twitter/@keshinomi_88pro

"CureMIDI8"	Sheet: 1/1
Date: 2019-01-14 (Rev:A1)	Tool: KiCad E.D.A. eeschema (5.0.0)