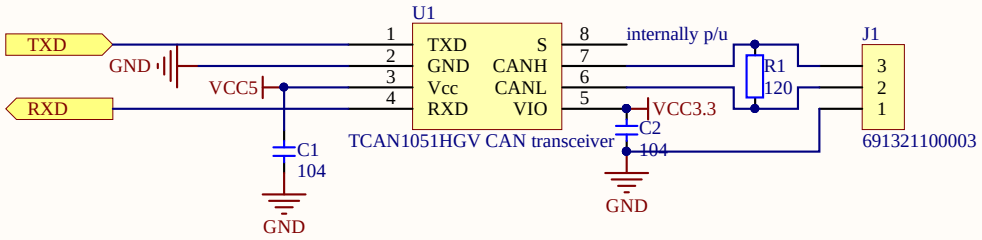


| | | |
|---|---|---|
| Title | | |
| Size: A | Number | Revision |
| Date: 12/13/2016 | | Sheet of |
| File: C:\Users\..\can.SchDoc | | Drawn By: |

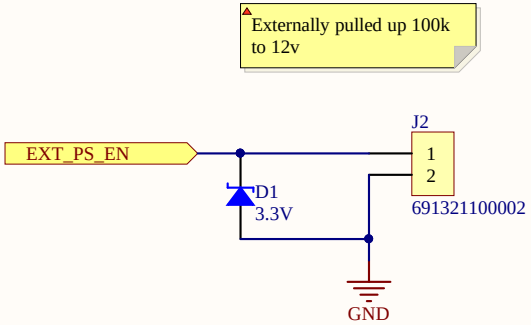


| | | |
|---|---|---|
| Title | | |
| Size: A | Number | Revision |
| Date: 12/13/2016 | | Sheet of |
| File: C:\Users\..\external_ps_en.SchDoc | | Drawn By: |

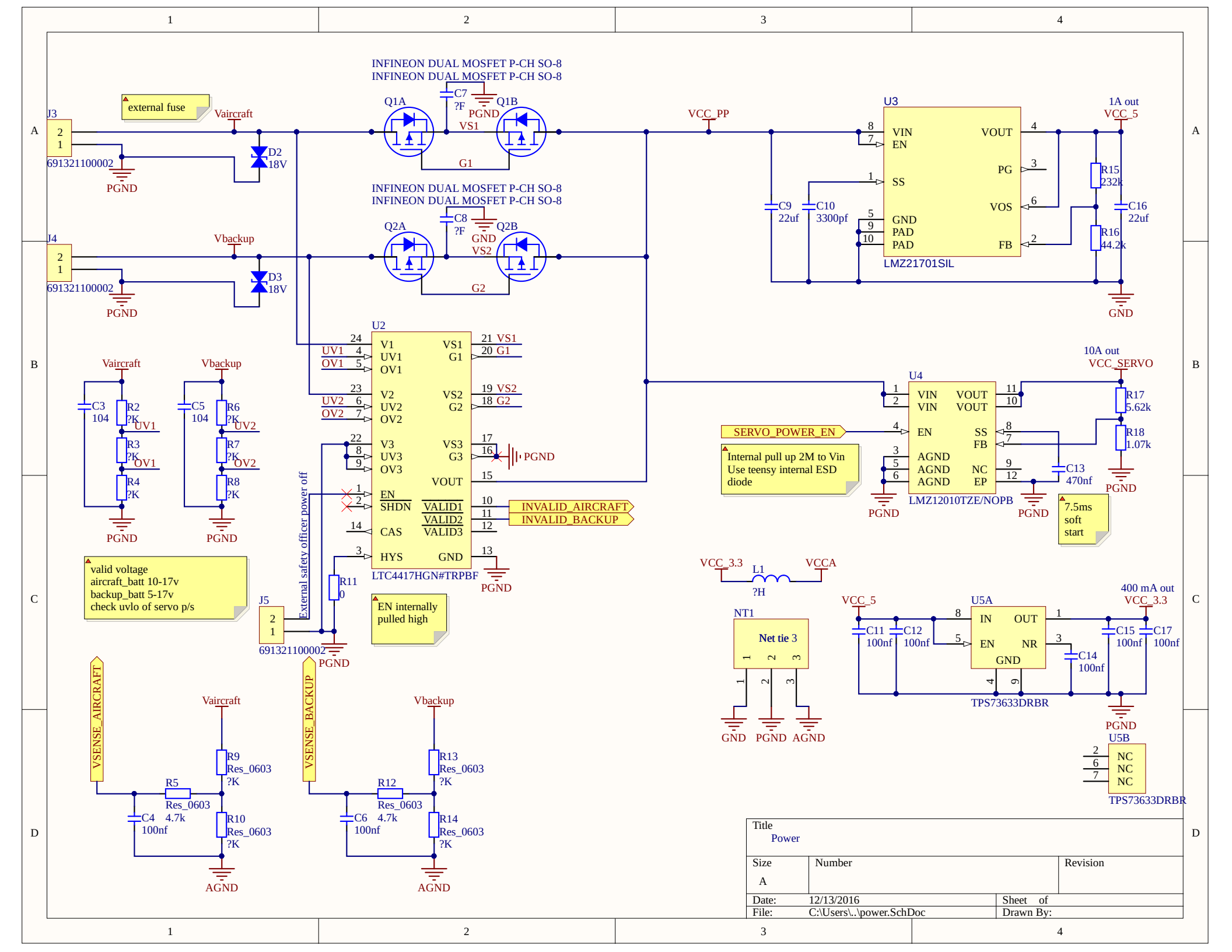
INFINEON DUAL MOSFET P-CH SO-8
INFINEON DUAL MOSFET P-CH SO-8
Q1A
Q1B
C7
?F
PGND
VS1
G1
INFINEON DUAL MOSFET P-CH SO-8
INFINEON DUAL MOSFET P-CH SO-8
Q2A
Q2B
C8
?F
GND
VS2
G2
external fuse
J3
691321100002
Vaircraft
D2
18V
PGND
J4
691321100002
Vbackup
D3
18V
PGND
VCC_PP
U3
VIN
EN
SS
GND
PAD
PAD
VOUT
PG
VOS
FB
LMZ21701SIL
1A out
VCC_5
R15
232k
R16
44.2k
C16
22uf
C9
22uf
C10
3300pf
GND
U2
V1
UV1
OV1
V2
UV2
OV2
V3
UV3
OV3
EN
SHDN
CAS
HYS
VS1
G1
VS2
G2
VS3
G3
VOUT
VALID1
VALID2
VALID3
GND
LTC4417HGN#TRPBF
INVALID_AIRCRAFT
INVALID_BACKUP
PGND
Vaircraft
Vbackup
C3
104
R2
?K
R3
?K
R4
?K
UV1
OV1
C5
104
R6
?K
R7
?K
R8
?K
UV2
OV2
PGND
valid voltage
aircraft_batt 10-17v
backup_batt 5-17v
check uvlo of servo p/s
External safety officer power off
R11
0
J5
691321100002
PGND
EN internally
pulled high
U4
VIN
VIN
EN
AGND
AGND
AGND
VOUT
VOUT
SS
FB
NC
EP
LMZ12010TZE/NOPB
SERVO_POWER_EN
Internal pull up 2M to Vin
Use teensy internal ESD
diode
10A out
VCC_SERVO
R17
5.62k
R18
1.07k
C13
470nf
7.5ms
soft
start
VCC_3.3
L1
?H
VCCA
NT1
Net tie 3
GND
PGND
AGND
VCC_5
U5A
IN
EN
GND
OUT
NR
C11
100nf
C12
100nf
C14
100nf
C15
100nf
C17
100nf
TPS73633DRBR
400 mA out
VCC_3.3
U5B
NC
NC
NC
TPS73633DRBR
VSENSE_AIRCRAFT
Vaircraft
R9
Res_0603
?K
R5
Res_0603
C4
4.7k
100nf
R10
Res_0603
?K
AGND
VSENSE_BACKUP
Vbackup
R13
Res_0603
?K
R12
Res_0603
C6
4.7k
100nf
R14
Res_0603
?K
AGND
Title
Power
Size
A
Number
Revision
Date:
12/13/2016
Sheet of
File:
C:\Users\..\power.SchDoc
Drawn By:

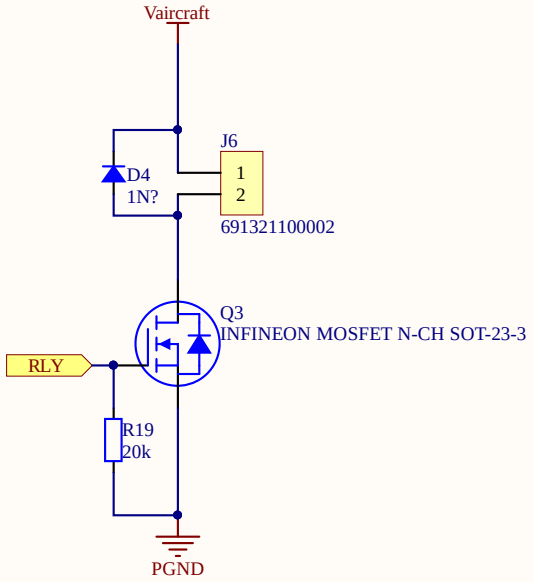


| | | |
|---|---|---|
| Title: Relay driver | | |
| Size: A | Number: | Revision: |
| Date: 12/13/2016 | | Sheet of |
| File: C:\Users\..\relay.SchDoc | | Drawn By: |

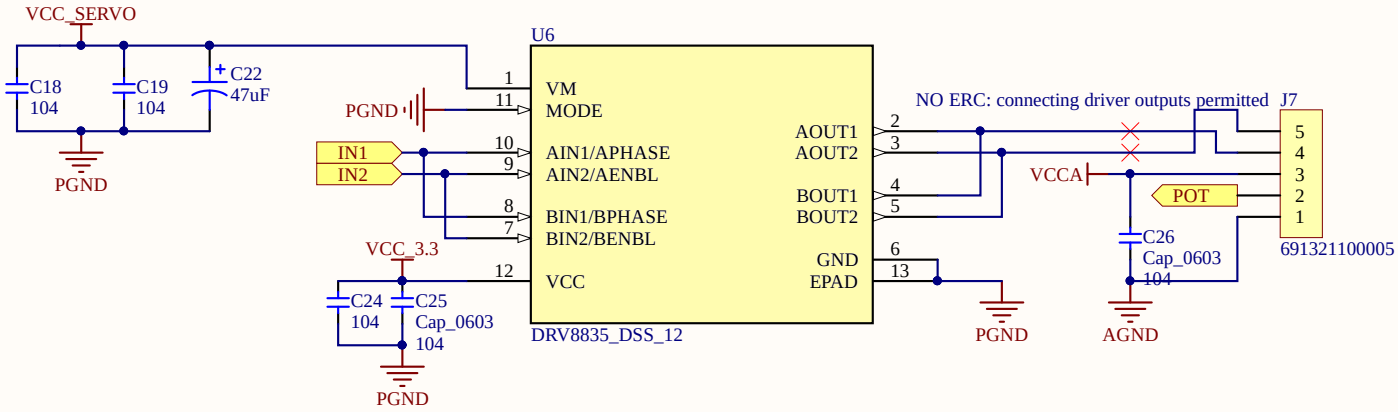


| | | |
|---|---|---|
| Title: Gutted servo driver + pot connection | | |
| Size: A | Number: | Revision: |
| Date: 12/13/2016 | | Sheet of |
| File: C:\Users\..\servo.SchDoc | | Drawn By: |

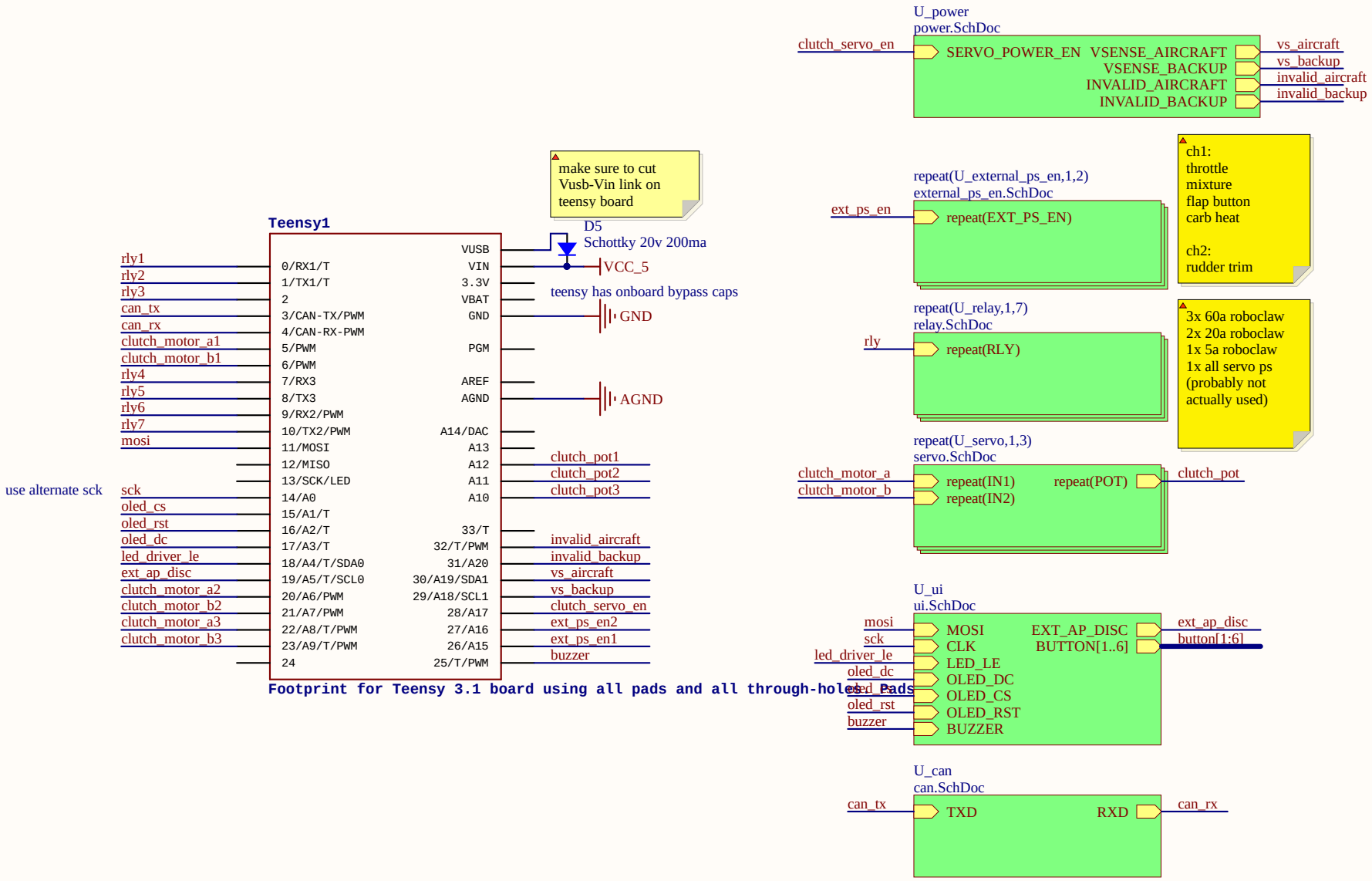
U_power
power.SchDoc
clutch_servo_en
SERVO_POWER_EN
VSENSE_AIRCRAFT
VSENSE_BACKUP
INVALID_AIRCRAFT
INVALID_BACKUP
vs_aircraft
vs_backup
invalid_aircraft
invalid_backup
make sure to cut
Vusb-Vin link on
teensy board
D5
Schottky 20v 200ma
VCC_5
teensy has onboard bypass caps
GND
AGND
Teensy1
rly1
rly2
rly3
can_tx
can_rx
clutch_motor_a1
clutch_motor_b1
rly4
rly5
rly6
rly7
mosi
use alternate sck
sck
oled_cs
oled_rst
oled_dc
led_driver_le
ext_ap_disc
clutch_motor_a2
clutch_motor_b2
clutch_motor_a3
clutch_motor_b3
0/RX1/T
1/TX1/T
2
3/CAN-TX/PWM
4/CAN-RX-PWM
5/PWM
6/PWM
7/RX3
8/TX3
9/RX2/PWM
10/TX2/PWM
11/MOSI
12/MISO
13/SCK/LED
14/A0
15/A1/T
16/A2/T
17/A3/T
18/A4/T/SDA0
19/A5/T/SCL0
20/A6/PWM
21/A7/PWM
22/A8/T/PWM
23/A9/T/PWM
24
VUSB
VIN
3.3V
VBAT
GND
PGM
AREF
AGND
A14/DAC
A13
A12
A11
A10
33/T
32/T/PWM
31/A20
30/A19/SDA1
29/A18/SCL1
28/A17
27/A16
26/A15
25/T/PWM
clutch_pot1
clutch_pot2
clutch_pot3
invalid_aircraft
invalid_backup
vs_aircraft
vs_backup
clutch_servo_en
ext_ps_en2
ext_ps_en1
buzzer
Footprint for Teensy 3.1 board using all pads and all through-holes
repeat(U_external_ps_en,1,2)
external_ps_en.SchDoc
ext_ps_en
repeat(EXT_PS_EN)
ch1:
throttle
mixture
flap button
carb heat
ch2:
rudder trim
repeat(U_relay,1,7)
relay.SchDoc
rly
repeat(RLY)
3x 60a roboclaw
2x 20a roboclaw
1x 5a roboclaw
1x all servo ps
(probably not
actually used)
repeat(U_servo,1,3)
servo.SchDoc
clutch_motor_a
clutch_motor_b
repeat(IN1)
repeat(IN2)
repeat(POT)
clutch_pot
U_ui
ui.SchDoc
mosi
sck
led_driver_le
oled_dc
oled_cs
oled_rst
buzzer
MOSI
CLK
LED_LE
OLED_DC
OLED_CS
OLED_RST
BUZZER
EXT_AP_DISC
BUTTON[1..6]
ext_ap_disc
button[1:6]
U_can
can.SchDoc
can_tx
TXD
RXD
can_rx
Title
Size
A
Number
Revision
Date:
12/13/2016
Sheet of
File:
C:\Users\..\teensy.SchDoc
Drawn By:

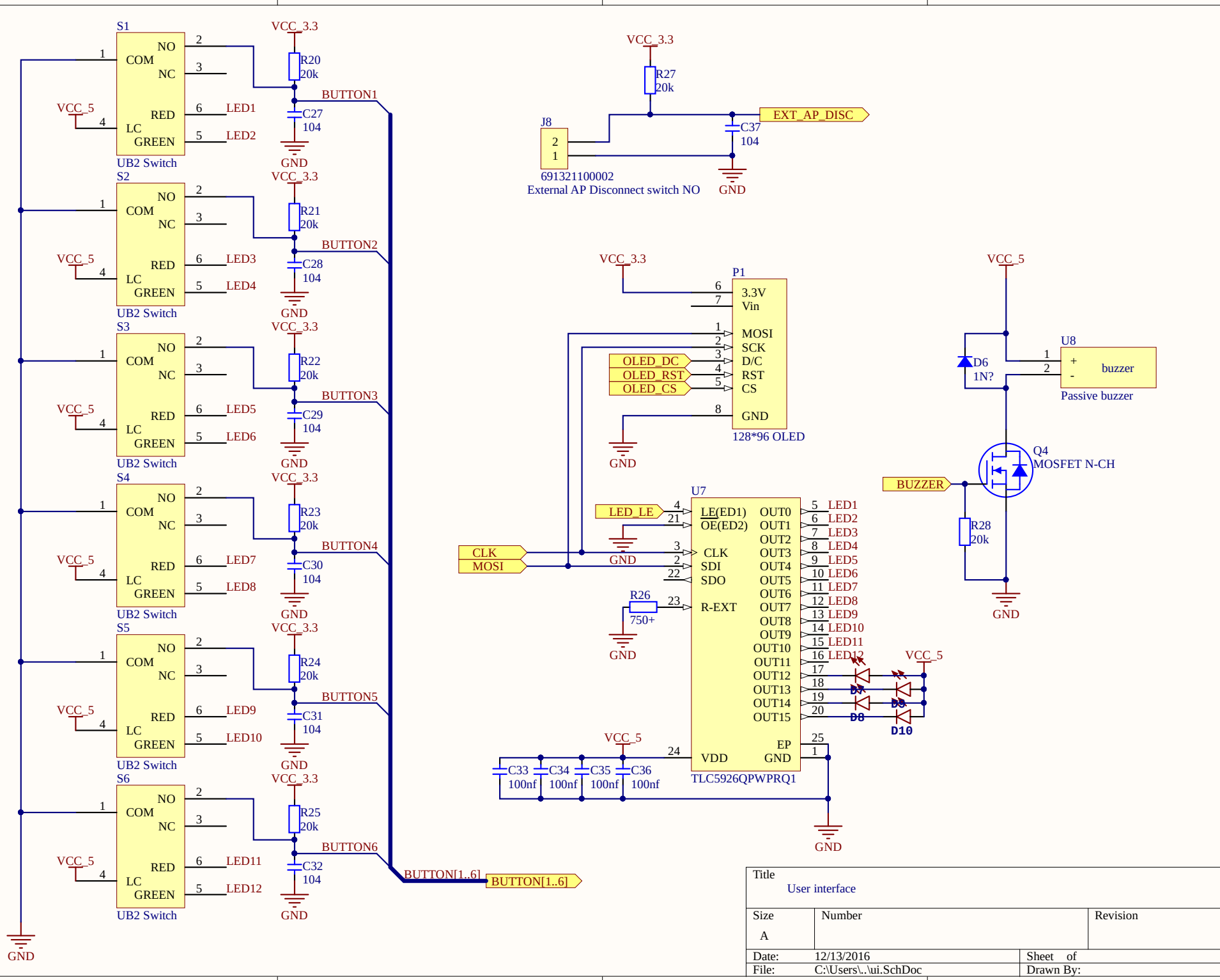
S1
S2
S3
S4
S5
S6
NO
COM
NC
RED
LC
GREEN
UB2 Switch
VCC_3.3
VCC_5
GND
R20 20k
R21 20k
R22 20k
R23 20k
R24 20k
R25 20k
C27 104
C28 104
C29 104
C30 104
C31 104
C32 104
BUTTON1
BUTTON2
BUTTON3
BUTTON4
BUTTON5
BUTTON6
LED1
LED2
LED3
LED4
LED5
LED6
LED7
LED8
LED9
LED10
LED11
LED12
BUTTON[1..6]
R27 20k
C37 104
J8
691321100002
External AP Disconnect switch NO
EXT_AP_DISC
P1
3.3V
Vin
MOSI
SCK
D/C
RST
CS
GND
128*96 OLED
OLED_DC
OLED_RST
OLED_CS
U7
LE(ED1)
OE(ED2)
CLK
SDI
SDO
R-EXT
OUT0
OUT1
OUT2
OUT3
OUT4
OUT5
OUT6
OUT7
OUT8
OUT9
OUT10
OUT11
OUT12
OUT13
OUT14
OUT15
EP
VDD
GND
TLC5926QPWPRQ1
LED_LE
CLK
MOSI
R26 750+
C33 100nf
C34 100nf
C35 100nf
C36 100nf
D7
D8
D9
D10
U8
buzzer
Passive buzzer
D6 1N?
Q4 MOSFET N-CH
BUZZER
R28 20k
Title
User interface
Size
A
Number
Revision
Date: 12/13/2016
File: C:\Users\..\ui.SchDoc
Sheet of
Drawn By:

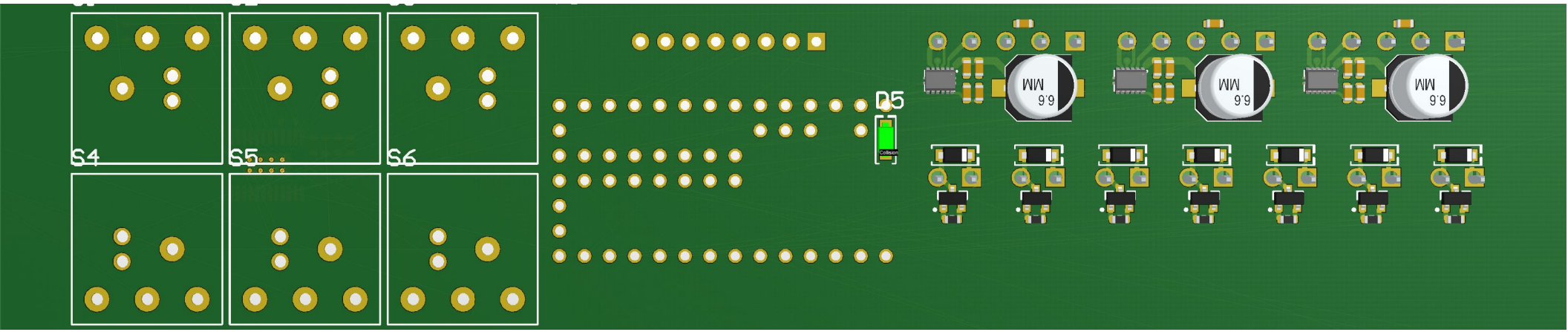
S4
S5
S6
D5
6.6
MM

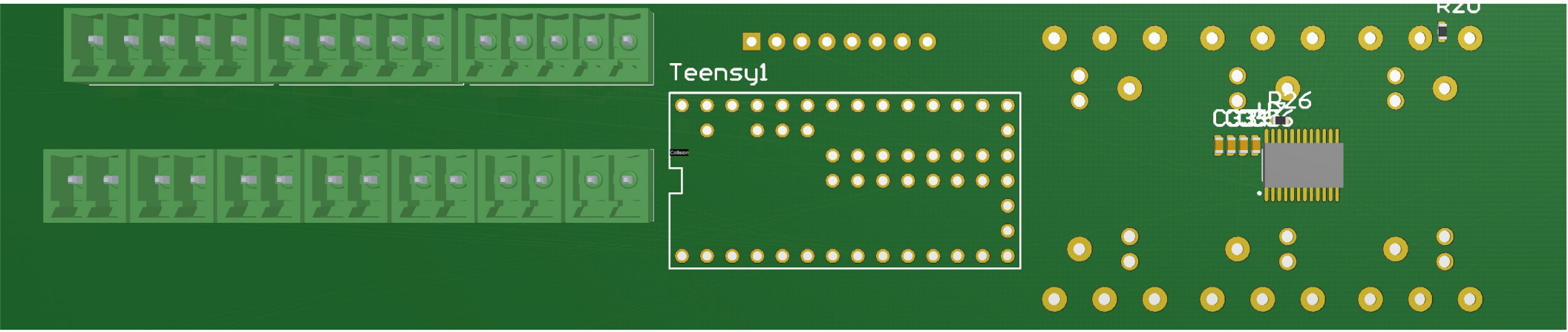
Teensy1
R26

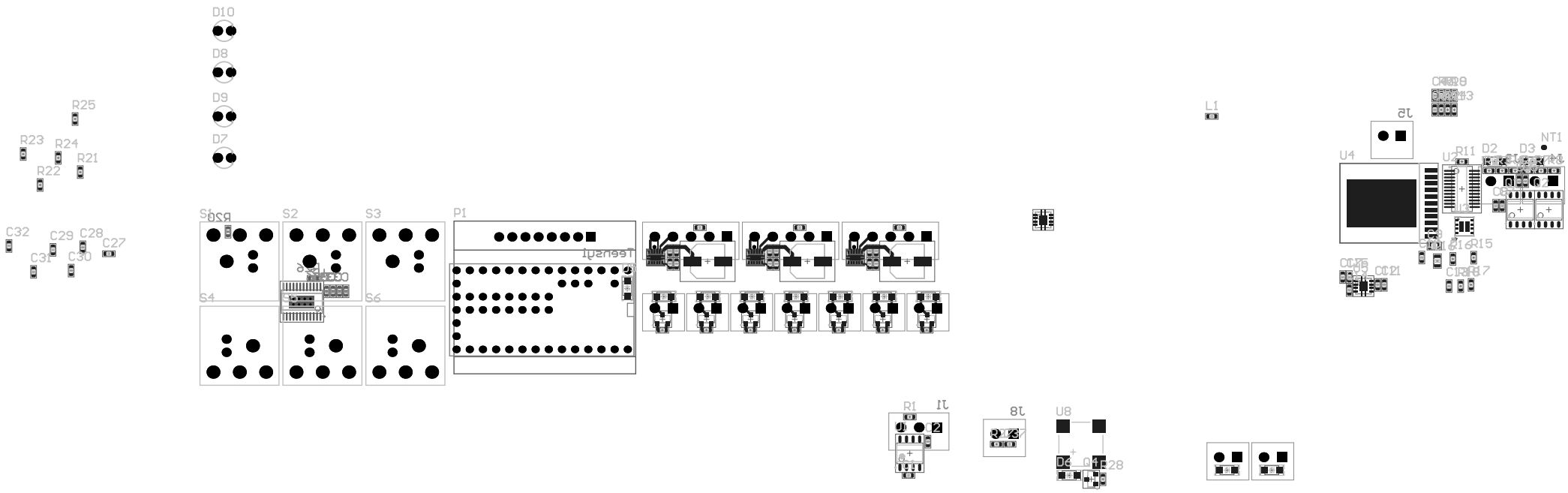
D10
D8
D9
D7
R25
R23
R24
R21
R22
C32
C29
C28
C27
C31
C30
S1
S2
S3
S4
S6
P1
L1
U4
U2
R11
D2
D3
NT1
R15
R1
U8

# Bill of Materials

<Parameter Title not found>

**Source Data From:** acap-safetyofficer.PrjPcb
**Project:** acap-safetyofficer.PrjPcb
**Variant:** None

Creation Date: 12/13/2016 1:56:46 AM
Print Date: 13-Dec-16 1:56:53 AM

| Footprint | Comment | LibRef | Designator | Description | Quantity |
|---|---|---|---|---|---|
| CAP_0603 | Cap_0603 | Cap_0603 | C1, C2, C3, C4, C5, C6, C7, C8, C10, C11, C12, C13, C14, C15, C17, C18_U_servo1, C18_U_servo2, C18_U_servo3, C19_U_servo1, C19_U_servo2, C19_U_servo3, C24_U_servo1, C24_U_servo2, C24_U_servo3, C25_U_servo1, C25_U_servo2, C25_U_servo3, C26_U_servo1, C26_U_servo2, C26_U_servo3, C27, C28, C29, C30, C31, C32, C33, C34, C35, C36, C37 | Capacitor | 41 |
| CAP_0805 | Cap_0805 | Cap_0805 | C9, C16 | Capacitor | 2 |
| CAP ALUM 6.6MM | 47uF | Polarised Capacitor | C22_U_servo1, C22_U_servo2, C22_U_servo3 | SMT Polarised Capacitor | 3 |
| SOD123F | 3.3V | Diode Zener | D1_U_external_ps_en1, D1_U_external_ps_en2 | Zener Diode | 2 |
| SOD123F | 18V | Diode Zener Bidirectional | D2, D3 | Bidirectional Zener Diode | 2 |
| SOD123F | Diode_SOD523 | Diode_SOD523 | D4_U_relay1, D4_U_relay2, D4_U_relay3, D4_U_relay4, D4_U_relay5, D4_U_relay6, D4_U_relay7, D5, D6 | Diode | 9 |
| LED3MM | | LED3MM | D7, D8, D9, D10 | | 4 |
| 691321100003 | 691321100003 | 691321100003 | J1 | WR-TBL Terminal block - serie 3211 - 3.50 mm | 1 |
| 691321100002 | 691321100002 | 691321100002 | J2_U_external_ps_en1, J2_U_external_ps_en2, J3, J4, J5, J6_U_relay1, J6_U_relay2, J6_U_relay3, J6_U_relay4, J6_U_relay5, J6_U_relay6, J6_U_relay7, J8 | WR-TBL Terminal block - serie 3211 - 3.50 mm | 13 |
| 691321100005 | 691321100005 | 691321100005 | J7_U_servo1, J7_U_servo2, J7_U_servo3 | WR-TBL Terminal block - serie 3211 - 3.50 mm | 3 |
| IND_0603 | Ind_0603 | Ind_0603 | L1 | Inductor | 1 |
| Adafruit OLED 1.3 | 128*96 OLED | Adafruit Monochrome OLED 1.3 | P1 | | 1 |
| INFINEON SO-8 | INFINEON DUAL MOSFET P-CH SO-8 | INFINEON DUAL MOSFET P-CH SO-8 | Q1, Q2 | | 2 |
| INFINEON SOT-23-3 | INFINEON MOSFET N-CH SOT-23-3 | INFINEON MOSFET N-CH SOT-23-3 | Q3_U_relay1, Q3_U_relay2, Q3_U_relay3, Q3_U_relay4, Q3_U_relay5, Q3_U_relay6, Q3_U_relay7 | | 7 |
| INFINEON SOT-23-3 | MOSFET N-CH | INFINEON MOSFET N-CH SOT-23-3 | Q4 | | 1 |
| RES_0603 | Res_0603 | Res_0603 | R1, R2, R3, R4, R5, R6, R7, R8, R9, R10, R11, R12, R13, R14, R15, R16, R17, R18, R19_U_relay1, R19_U_relay2, R19_U_relay3, R19_U_relay4, R19_U_relay5, R19_U_relay6, R19_U_relay7, R20, R21, R22, R23, R24, R25, R26, R27, R28 | Resistor | 34 |
| EXTRON CLICKY | UB2 Switch | EXTRON CLICKY | S1, S2, S3, S4, S5, S6 | | 6 |
| TEENSY_3.1_ALLPINS | Footprint for Teensy 3.1 board using all pads and all through-holes. Pads need a 2x7 0.1" SMD header. | TEENSY_3.1_ALL_PINS_AND_PADS | Teensy1 | | 1 |
| SOIC127P600X175-8N | TCAN1051HGV CAN transceiver | TCAN1051HGV | U1 | | 1 |
| LT-GN-24_N | LTC4417HGN#TRPBF | LTC4417HGN#TRPBF | U2 | Prioritized PowerPath Controller, 2.5 to 36 V Vin, 24-pin SOP (GN-24), -40 to 125 degC, Pb-Free, Tape and Reel | 1 |
| LMZ21701SIL | LMZ21701SIL | LMZ21701SIL | U3 | 1A SIMPLE SWITCHER Nano Module with 17V Maximum Input Voltage, SIL0008E | 1 |
| TZA11A_V | LMZ12010TZE/NOPB | LMZ12010TZE/NOPB | U4 | 10A, SIMPLE SWITCHER® Power Module with 20V Maximum Input, 11 pin TO-PMOD, 250 Reel | 1 |
| TI-DRB8-1750X1500TP_V | TPS73633DRBR | TPS73633DRBR | U5 | Single Output Low Noise LDO, 400 mA, Fixed 3.3 V Output, 1.7 to 5.5 V Input, with Reverse Current Protection, 8-pin SON (DRB), -40 to 85 degC, Green (RoHS & no Sb/Br) | 1 |
| DSS12_P9X2 | DRV8835_DSS_12 | DRV8835_DSS_12 | U6_U_servo1, U6_U_servo2, U6_U_servo3 | Imported | 3 |
| TI-PWP24-4420X1950TP_N | TLC5926QPWPRQ1 | TLC5926QPWPRQ1 | U7 | Automotive Catalog 16-Bit Constant-Current LED Sink Driver, 3 to 5.5 V, -40 to 125 degC, 24-pin SOP (PWP24), Green (RoHS & no Sb/Br) | 1 |
| CMT-8540S-SMT | Passive buzzer | Passive Buzzer | U8 | | 1 |
| | | | | | 143 |

| Approved | Notes | |
|---|---|---|
| | | |