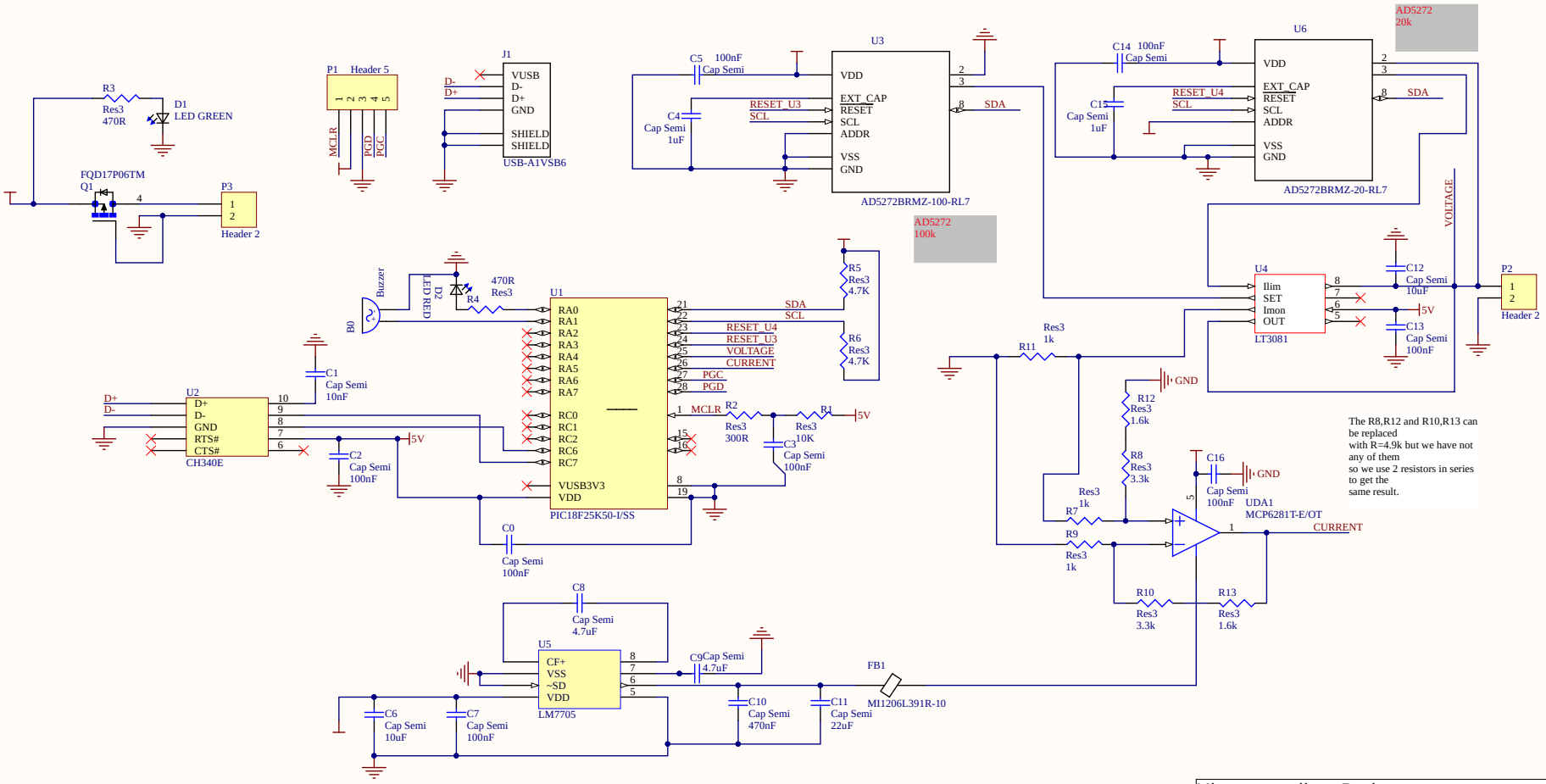

Microcontrollers Project
Proffessor : V.Tenentes
Team : 5v (Voula Kontotoli,Xaris Ketoglou)
Project : 5V,1.5A Power Suppy with adjustable CC,CV via PC

Title: 5V Project for Microcontrolers		
Size: B	Number: 0	Revision: 1.0
Date: 3/18/2019	Sheet of	
File: D:\orion\..\5V_1.5A Power Supply Schematic.SchDoc	Drawn By:	