Internal Use

JSE:

- Remove the protective cap
- First rinse the electrode with distilled water and wipe it with filter paper.
- Switch the meter on by pressing the "ON/OFF" button.
- Dip the pH meter electrode into the solution to be tested (it must not be above
- Stir gently and wait about 30 seconds for the reading to stabilise
- When finished, clean the electrode with clean water, switch off the meter by pre
- Always wear a protective cap after use

CALIBRATION:

- ✅ Switch on the pH meter
- ✅ Dissolve **pH 6.86** buffer solution in 250 ml distilled water (below temperature 25).
- ✅ Press the " CAL " (calibration) button for 5 seconds and release - The display will start fla
.
- ✅ Rinse the electrode with distilled water and dry it with filter paper.
- ✅ Dip the electrode into another solution **with pH 4.00 .**
- ✅ Press the "CAL" button for 5 seconds, then press and release immediately a second time the display stops flashing
- ✅ Rinse and dry the electrode with distilled water as before.
- ✅ Repeat the operation for calibration of a solution **with pH 9.18**

TECHNICAL SPECIFICATIONS:

- ✅ Product code: **11278**
- ✅ **Universal** application
- ✅ Measurement of **ph**
- ✅ Operating temperature: **0 - 60 degrees Celsius**
- ✅ Calibration
- ✅ Sleeve for **storing the meter**
- ✅ pH measurement: **0.0 - 14.0 pH**
- ✅ Resolution: **0.01** pH
- ✅ Power supply: **2x 1.5V LR44 battery (supplied)**
- ✅ Accuracy: **± 0.1 pH (20 °C) ± 0.2** pH
- ✅ Dimensions: **15cm x 3.3cm x 2cm**

Internal Use

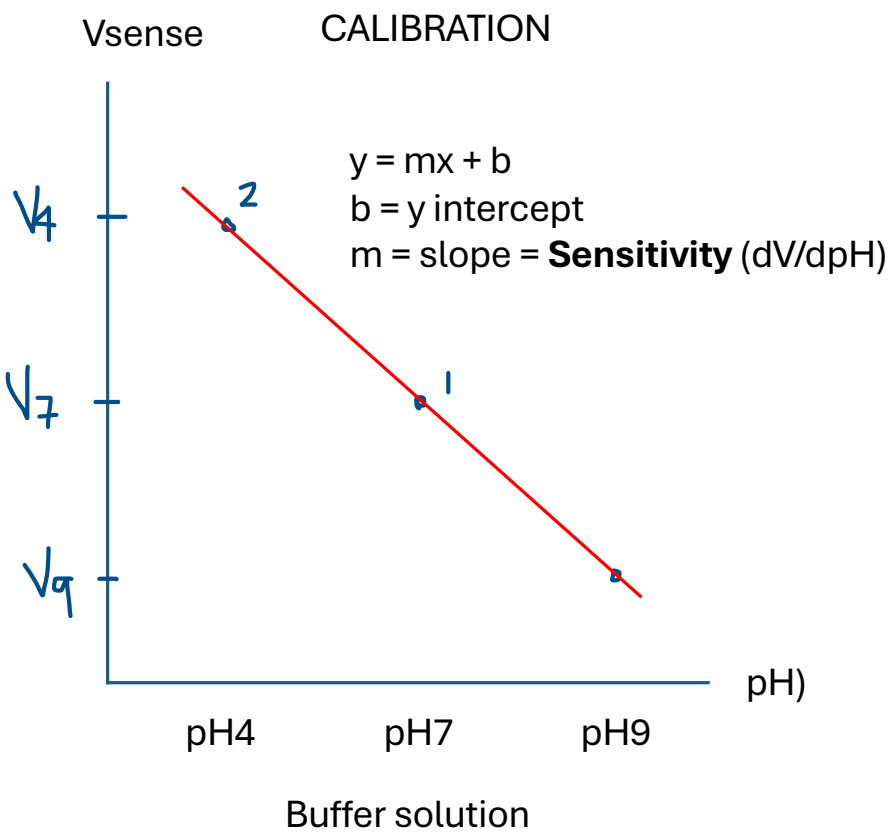

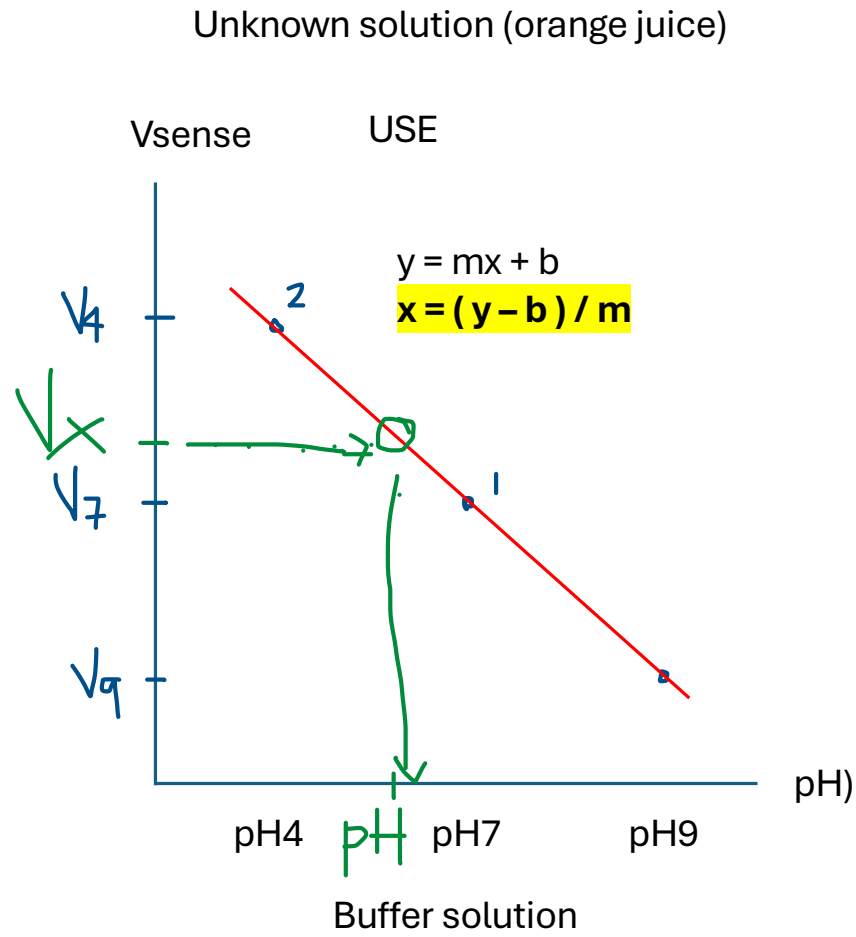

Internal Use

SYSTEM BLOCK DIAGRAM

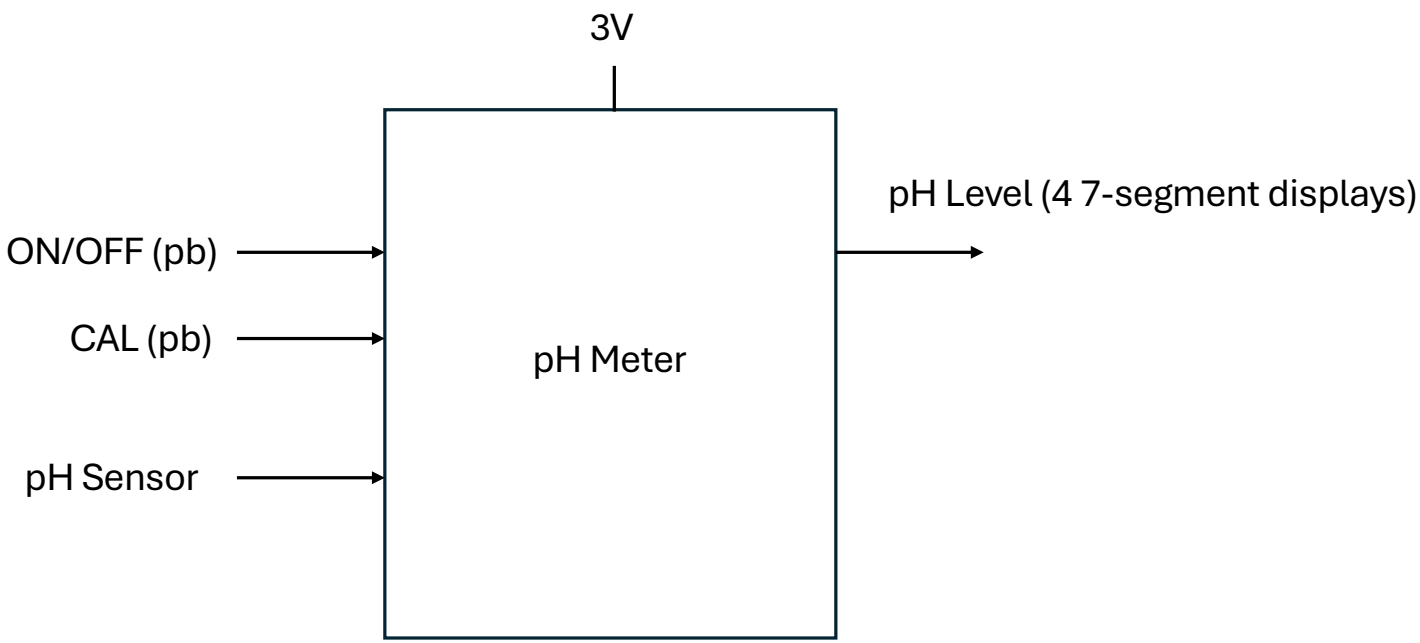

Internal Use

TECHNICAL SPECIFICATIONS:

- ✅ Product code: **11278**
- ✅ **Universal** application
- ✅ Measurement of **ph**
- ✅ Operating temperature: **0 - 60 degrees Celsius**
- ✅ Calibration
- ✅ Sleeve for **storing the meter**
- ✅ pH measurement: **0.0 - 14.0 pH**
- ✅ Resolution: **0.01** pH
- ✅ Power supply: **2x 1.5V LR44 battery (supplied)**
- ✅ Accuracy: **± 0.1 pH (20 °C) ± 0.2** pH
- ✅ Dimensions: **15cm x 3.3cm x 2cm**

Resolution = 0.01 pH
pH Range: pH 0 to pH 14
Supply: 2 x 1.5V = 3V

Supply = 3V
pH level = 14
3V/14 = 0.21 V/pH

pH level (range) = 14
Resolution = 0.01 pH
pH steps = 14/0.01 = 1400
pH 0.00, pH 0.01, pH 0.02 .... pH 13.98, pH 13.99, pH 14.00
Steps = 3V / 1400 = 0.0021 V = **2.1 mV**

ADC, no. of bits = ?
step = Vref / 2^n
2.1 mV = 3V / 2^n
n > 10.48

Internal Use

SYSTEM BLOCK DIAGRAM

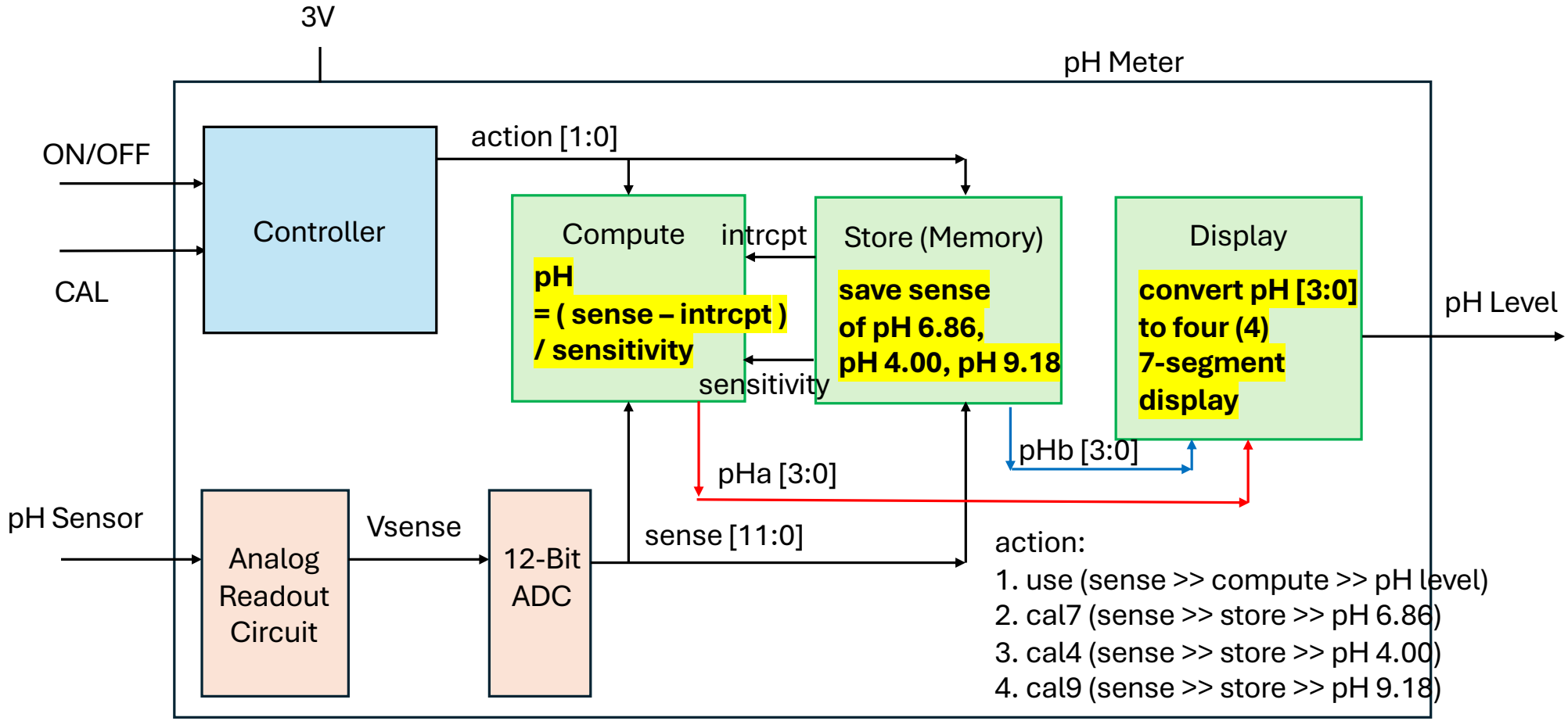

Internal Use

nternal Use

SYSTEM BLOCK DIAGRAM

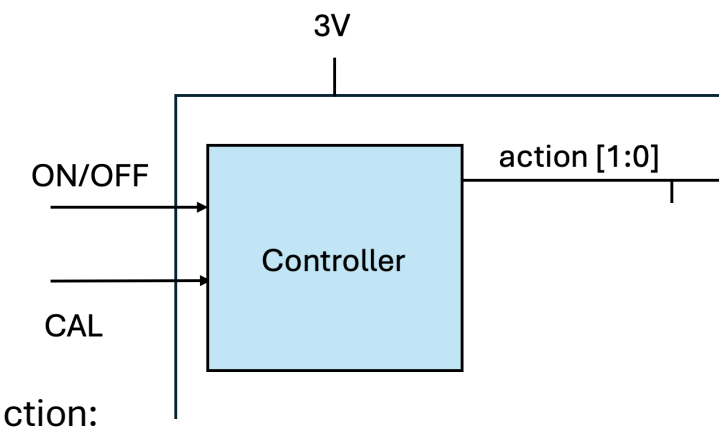

action:

1. use (sense >> compute >> pH level)
2. cal7 (sense >> store >> pH 6.86)
3. cal4 (sense >> store >> pH 4.00)
4. cal9 (sense >> store >> pH 9.18)

parameter [2:0] STNDBY = 3'b000;
parameter [2:0] USE = 3'b001;
parameter [2:0] DISPLAY = 3'b011;
parameter ...

(Sample only)

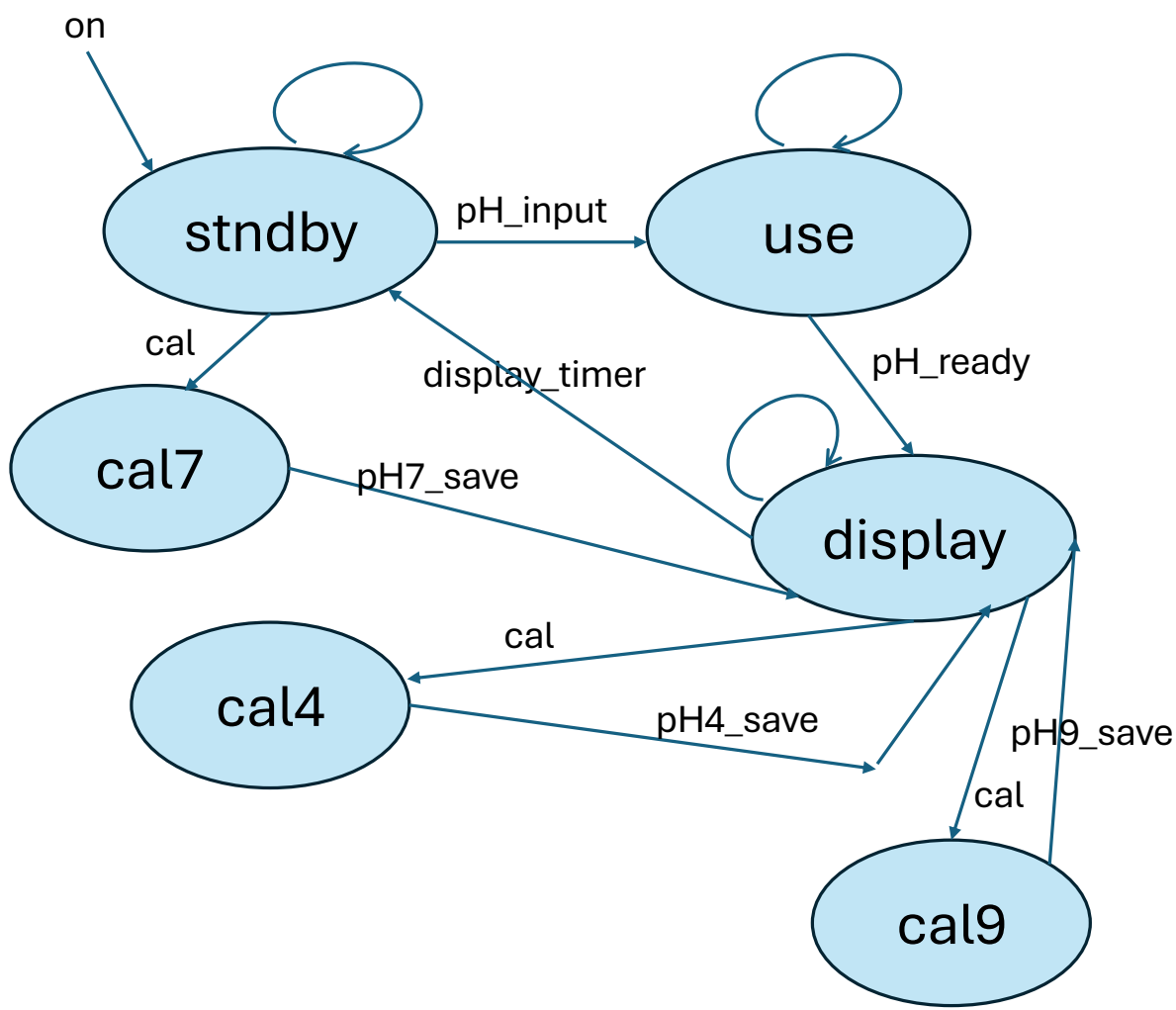

state2	Trigger	state1	Actions	Output
xxxx	turn_on=1: When pushbutton ON/OFF is pressed.	STANDBY	- Monitor pH_sense. - Remain in STANDBY if pH_sense is out of range. - Set pH_input to 1 when pH_sense is within pH_sense_0 and pH_sense_14.	Display _ _ _ _
STANDBY	- Set turn_on to 0. - pH_input=1: When pH_sense is within pH_sense_0 and pH_sense_14.	STABILIZE	Check if pH_sense is within pH_sense_step. If yes, set pH_stable to 1.	Blink display _ _ _ _
STABILIZE	- Set pH_input to 0. - pH_stable=1: When pH_sense is no longer changing.	COMPUTE	Find the pH_level equivalent of pH_sense. If done, set pH_ready to 1.	Blink display _ _ _ _
COMPUTE	- Set pH_stable to 0. - pH_ready=1: When pH_level is calculated.	DISPLAY	Display the pH_level into four 7-segment displays.	Display pH level
DISPLAY	- Set pH_ready to 0. - timer: After a counter.	STANDBY	Monitor pH_sense.	Display _ _ _ _
STANDBY	timer: After a counter.	OFF	Turn off.	Turn off display.

state2	Trigger	state1	Actions	Output
xxxx	turn_on=1: When pushbutton ON/OFF is pressed.	STANDBY	- Monitor pH_sense. - Remain in STANDBY if pH_sense is out of range. - Set pH_input to 1 when pH_sense is within pH_sense_0 and pH_sense_14.	Display _ _ _ _
STANDBY	- cal7=1 & pH_input=1: When pushbutton CAL is pressed, and when pH_sense is within pH_sense_0 and pH_sense_14.	CAL7	- Check if pH_sense is within pH_sense_step. If yes, set pH_stable to 1.	Blink display 7
CAL7	- pH_stable=1: When pH_sense is no longer changing. - Set pH_input to 0	STORE7	Store pH_sense into pH_sense_7.	Display pH 6.86
STORE7	Set pH_stable to 0.	STANDBY	- Monitor pH_sense. - Remain in STANDBY if pH_sense is out of range. - Set pH_input to 1 when pH_sense is within pH_sense_0 and pH_sense_14.	Display _ _ _ _

state2	Trigger	state1	Actions	Output
xxxx	turn_on=1: When pushbutton ON/OFF is pressed.	STANDBY	- Monitor pH_sense. - Remain in STANDBY if pH_sense is out of range. - Set pH_input to 1 when pH_sense is within pH_sense_0 and pH_sense_14.	Display _ _ _ _
STANDBY	- cal7=1 & cal4=1 & pH_input=1: When pushbutton CAL is pressed, and when pH_sense is within pH_sense_0 and pH_sense_14.	CAL4	- Check if pH_sense is within pH_sense_step. If yes, set pH_stable to 1.	Blink display 4
CAL4	- pH_stable=1: When pH_sense is no longer changing. - Set pH_input to 0	STORE4	Store pH_sense into pH_sense_4.	Display pH 4.00
STORE4	Set pH_stable to 0.	STANDBY	- Monitor pH_sense. - Remain in STANDBY if pH_sense is out of range. - Set pH_input to 1 when pH_sense is within pH_sense_0 and pH_sense_14.	Display _ _ _ _