Enrollment No.: _____

Darshan UNIVERSITY

Darshan Institute of Engineering & Technology
B.Tech. | Sem-4 | Summer-2024

Course Code	:	2301CS402	**Date**	:	09-05-2024
Course Name	:	Design and Analysis of Algorithm	**Duration**	:	150 Minutes
			Total Marks	:	70

Instructions:
1. Attempt all the questions.
2. Figures to the right indicates maximum marks.
3. Make suitable assumptions wherever necessary.

Q.1 (A) Define asymptotic notation. Explain asymptotic notations with examples. **4**

(B) Define term algorithm. Discuss key characteristics of algorithm. **3**

OR

What will be the worst case time complexity for following code?

```
int i = n;
while(i)
   i = i/2;
```

(C) Write selection sort algorithm and compute running time of algorithm. **7**

OR

Write counting sort algorithm and apply counting sort for the given numbers to sort in ascending order. <3, 1, 2, 3, 3, 1>

Q.2 (A) Solve the following using Master's theorem: **4**
(a) $T(n) = 4T(n/2) + n^2$ (b) $T(n)=16T(n/4) + n$

(B) What is a recurrence? Solve recurrence equation for T (n) =T (n-1) + 1 using substitution method. **3**

OR

Explain how multiplication of large integers can be done efficiently by using divide and conquer technique?

(C) Write Merge sort algorithm. Sort the List <B, T, E, C, H, C, S, E> in alphabetical order using merge sort. **7**

OR

Write the quick sort algorithm. Trace the same on data <4, 3, 1, 9, 8, 2, 4, 7>

Q.3 (A) Write down the characteristics of Greedy Algorithm. **4**

(B) Demonstrate Binary Search method to search Key = 14, form the array A=<2,4,7,8,10,13,14,60> **3**

OR

Demonstrate limitations of greedy strategy using example in the case of making change problem.

(C) Find the Huffman code for each symbol in following text **7**
ABCCDEBABFFBACBEBDFAAAABCDEEDCCBFEBFCAE

OR

Define Minimum Spanning Tree. Use Krushkal's and prim's algorithm to find Minimum Spanning Tree of given graph.

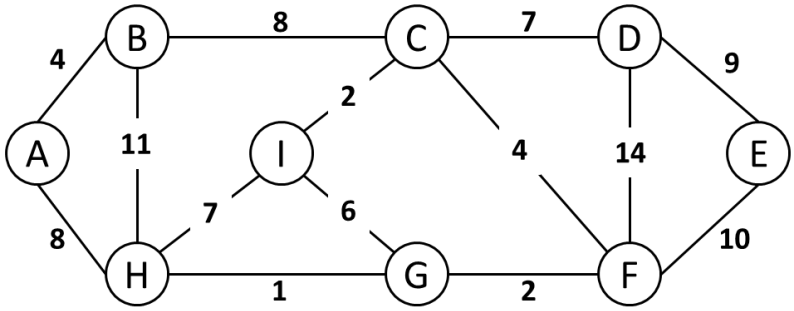

Q.4 **(A)** Differentiate divide-and-conquer and dynamic programming. **4**

(B) Generate only solution table for Making Change problem using Dynamic Programming. (Denominations: d1=1, d2=4, d3=6, change of Rs. 10). **3**

OR

Generate only solution table for knapsack problem using dynamic programming with capacity W=5, Weight and Value are as follows: (2,12),(1,10),(3,20),(2,15).

(C) Write an algorithm for Longest Common Subsequence. Find Longest Common Subsequence of given two strings using Dynamic Programming. **7**
S1=abbacdcba S2=bcdbbcaac

OR

Write equation for Matrix chain multiplication using Dynamic programming.
Find out minimum number of multiplications required for: A[1 × 5], B[5 × 4], C[4 × 3], D[3 × 2], and E[2 × 1]. Also give the parenthesization of matrices.

Q.5 **(A)** Define P, NP, NP-Hard and NP-Complete Problem. **4**

(B) Write DFS traversal of the given graph. **3**

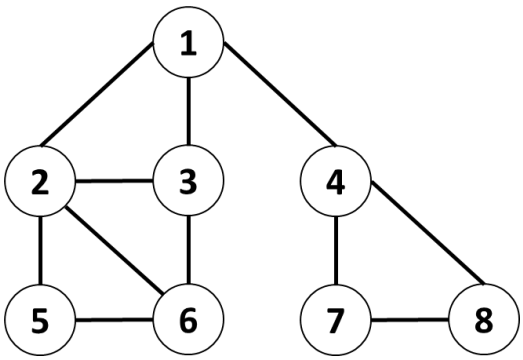

OR

Write BFS traversal of the given graph.

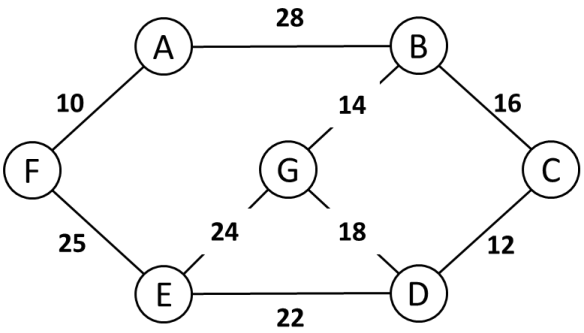

(C) Explain spurious hits in Rabin-Karp string matching algorithm with example. Working modulo q=13, how many spurious hits does the Rabin-Karp matcher encounter in the text T = 2359023141526739921 when looking for the pattern P= 26? **7**

OR

What is N-Queens Problem? Write an algorithm for 4- Queens Problem using Backtracking Method.

***