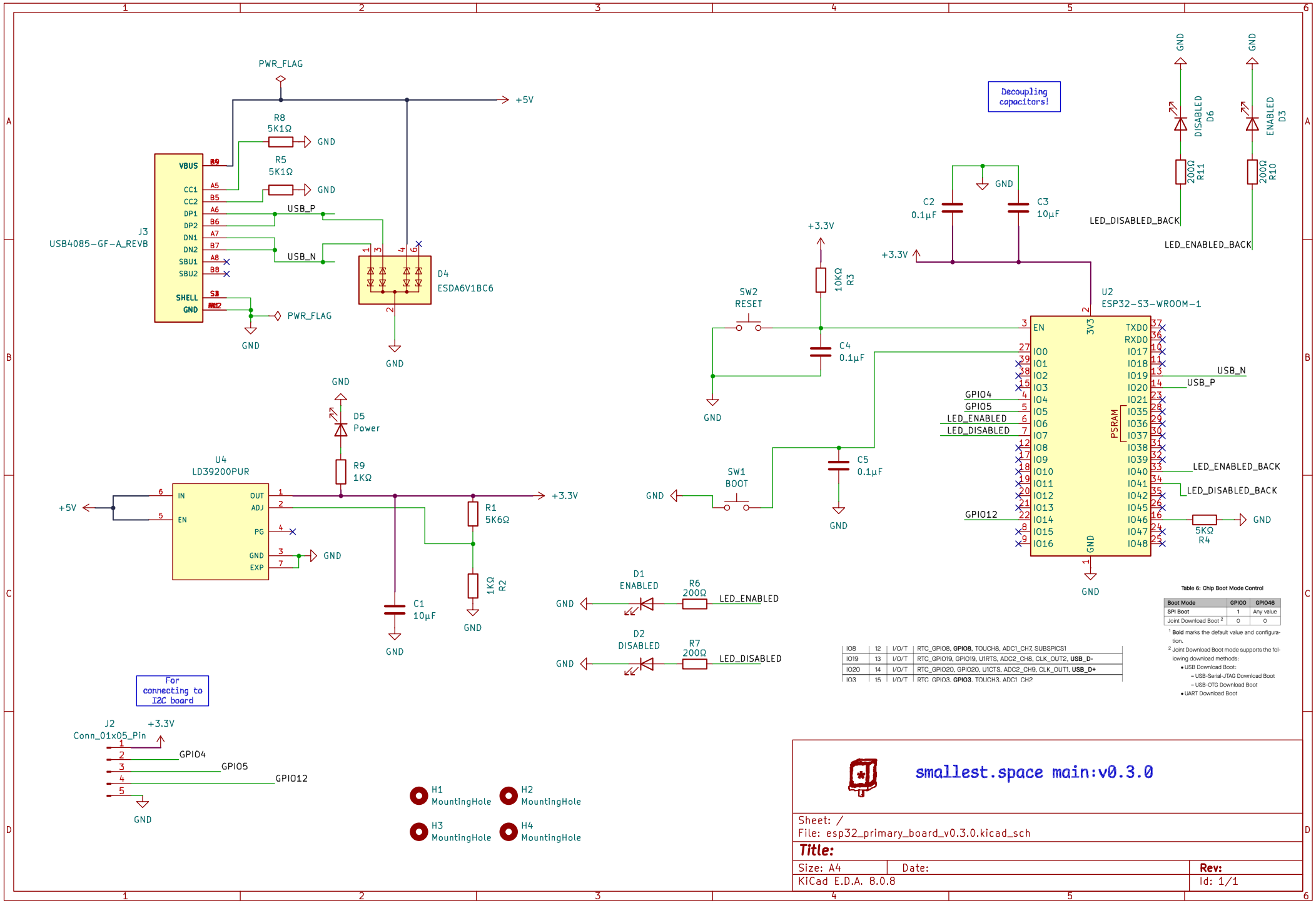

IO8	12	I/O/T	RTC_GPIO8, **GPIO8**, TOUCH8, ADC1_CH7, SUBSPICS1
IO19	13	I/O/T	RTC_GPIO19, GPIO19, U1RTS, ADC2_CH8, CLK_OUT2, **USB_D-**
IO20	14	I/O/T	RTC_GPIO20, GPIO20, U1CTS, ADC2_CH9, CLK_OUT1, **USB_D+**
IO3	15	I/O/T	RTC_GPIO3, **GPIO3**, TOUCH3, ADC1_CH2

Table 6: Chip Boot Mode Control

Boot Mode	GPIO0	GPIO46
SPI Boot	1	Any value
Joint Download Boot [2]	0	0

[1] **Bold** marks the default value and configuration.

[2] Joint Download Boot mode supports the following download methods:

- USB Download Boot:
  - USB-Serial-JTAG Download Boot
  - USB-OTG Download Boot
- UART Download Boot