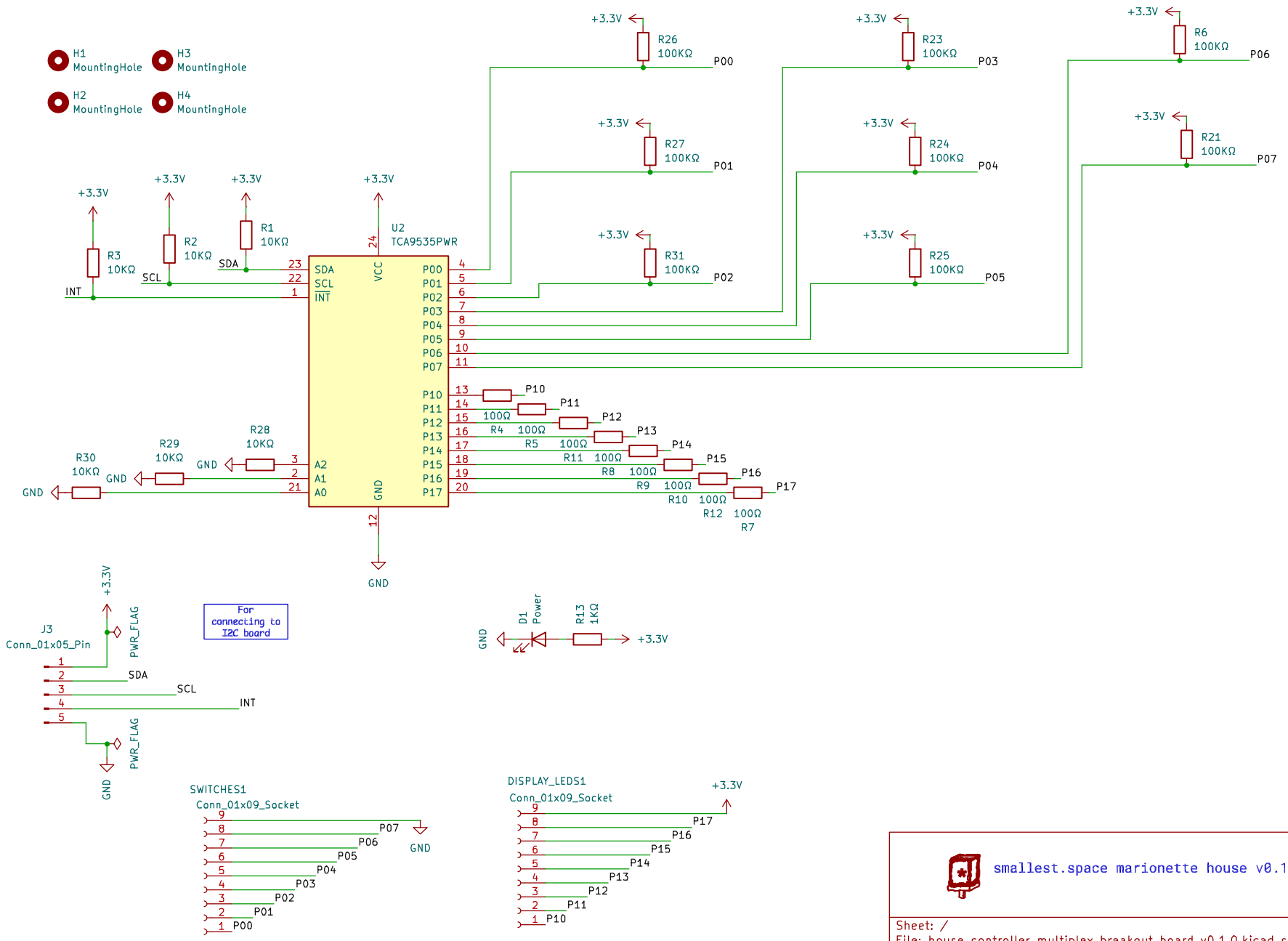

smallest.space marionette house v0.1.0

Sheet: /
File: house_controller_multiplex_breakout_board_v0.1.0.kicad_sch

Title:

Size: A4	Date:	**Rev:**
KiCad E.D.A. 8.0.8		Id: 1/1