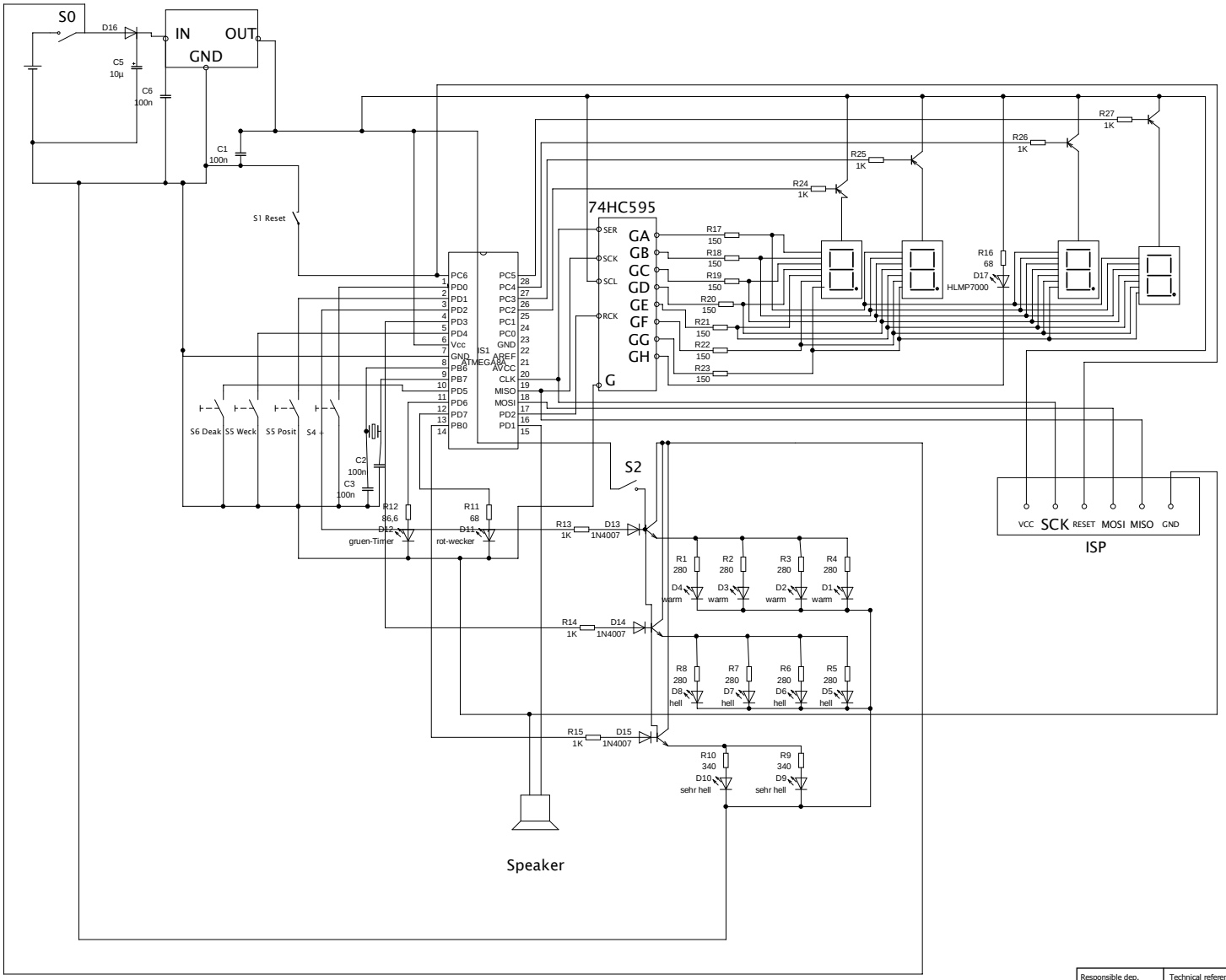


| Responsible dep. | Technical reference | Created | Approved |
|---|---|---|---|
| **Development** | **SL012** | **Kevin Lüdemann** | **Kevin Lüdemann** |
| | | Document type: **wiring Plan** | Document status: **develloping** |
| | | Title, supplementary title | **SL012** Rev. **2** |
| | | Date of issue: **11.09.20134** | Lang.: **Mindproductions** Sheet: 1/1 |

profiCAD