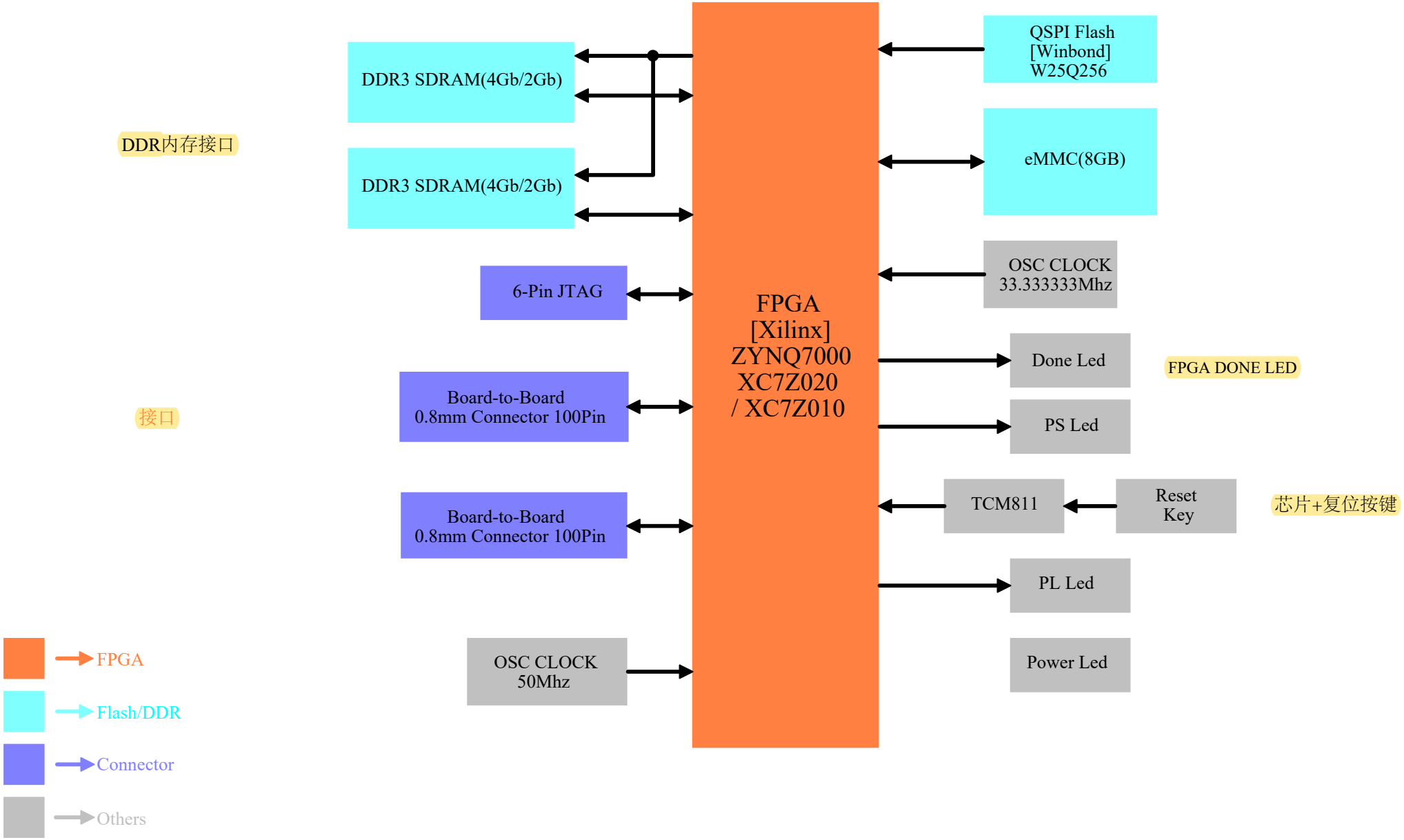

Design Name	ZYNQ-CORE	
Size A4	Page Name 01_Block Diagram	Rev 1.0
Date: Tuesday, April 23, 2024	Sheet 1 of 12	

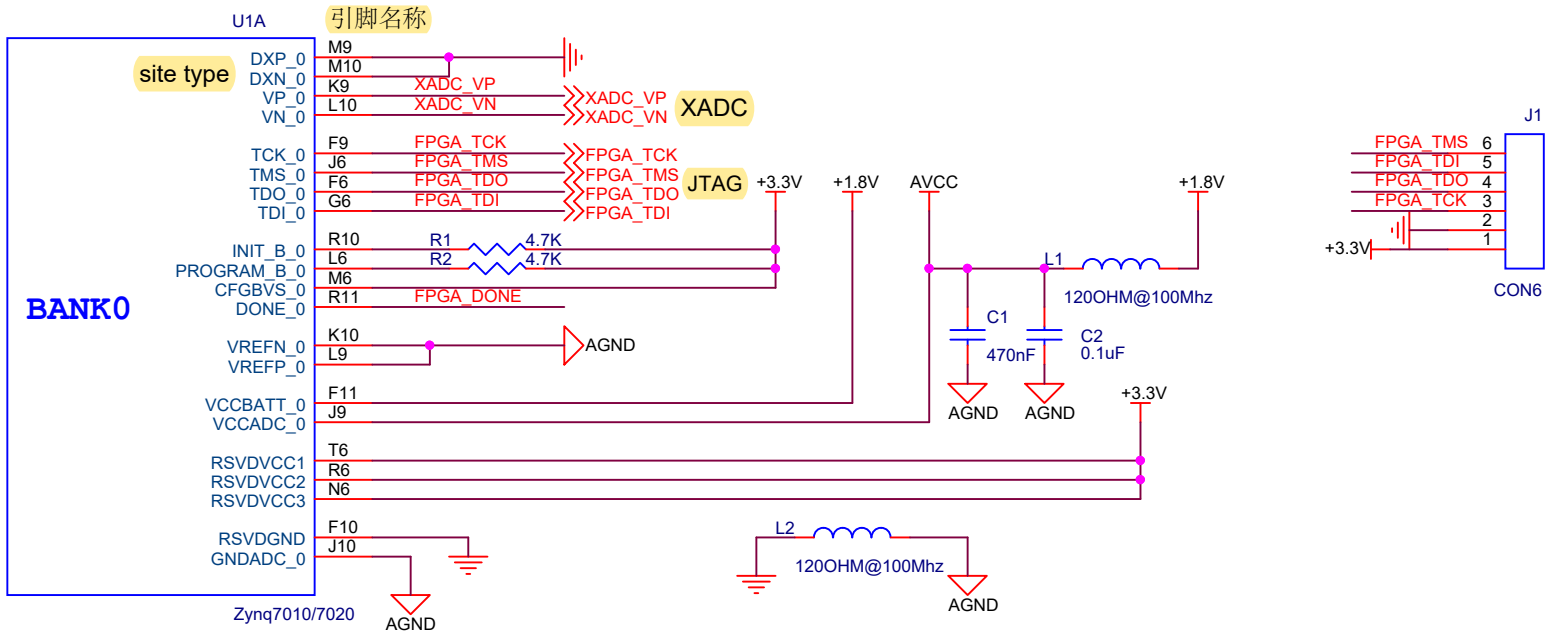

指示FPGA是否成功配置

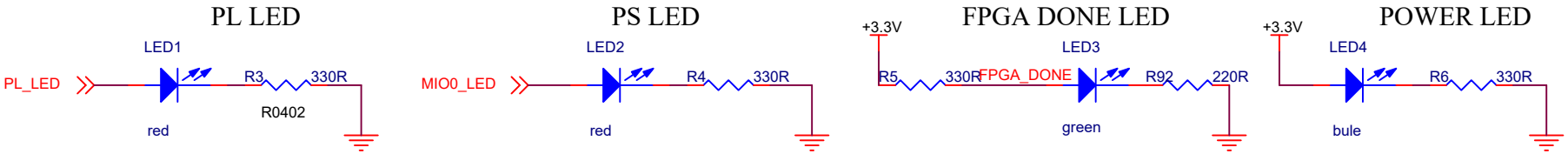

Design Name	ZYNQ-CORE	
Size A4	Page Name 02_FPGA Bank0	Rev 1.0
Date: Tuesday, April 23, 2024	Sheet 2 of 12	

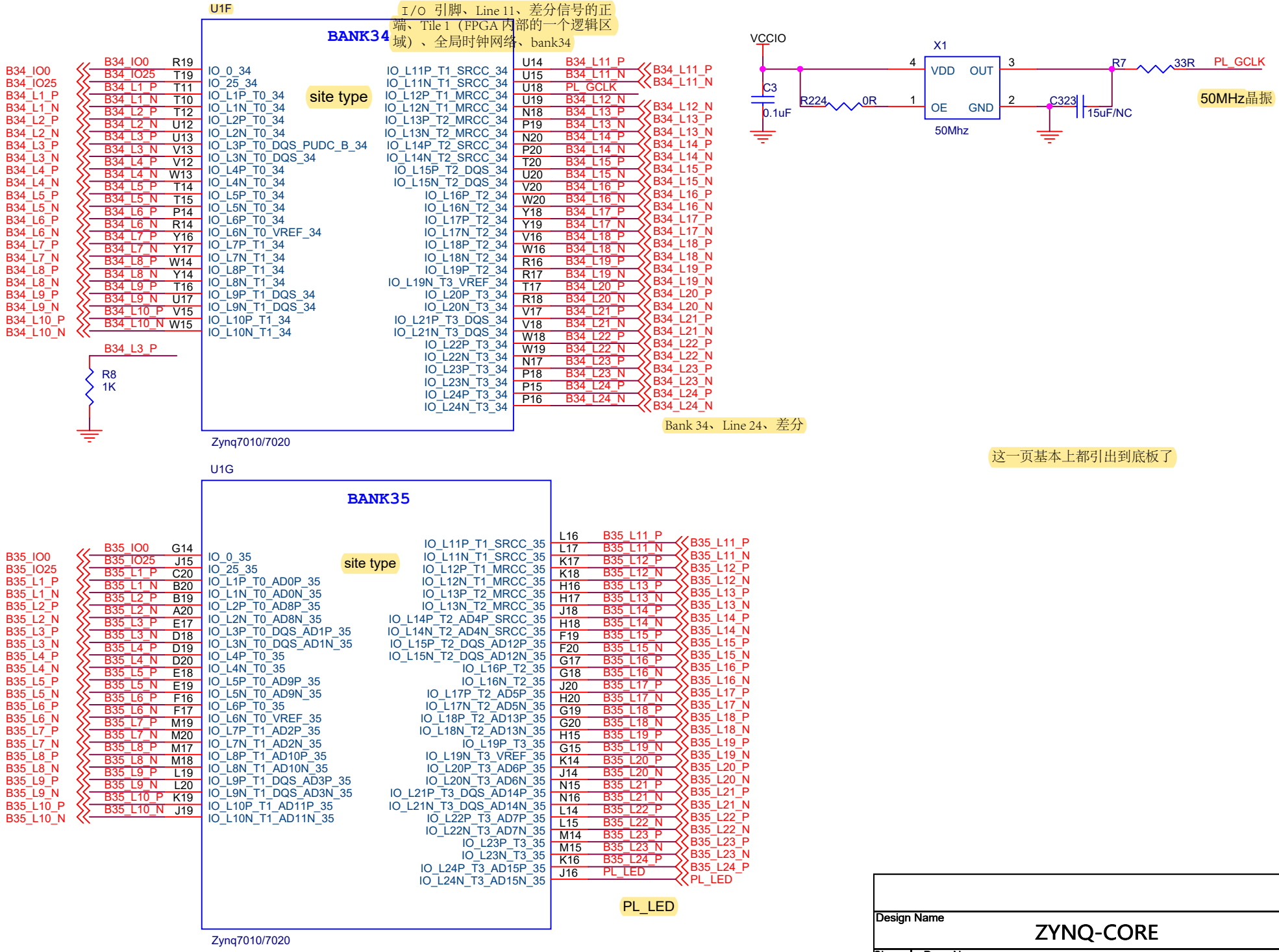

Design Name	ZYNQ-CORE		
Size A4	Page Name 03_FPGA Bank34,Bank35		Rev 1.0
Date: Thursday, May 16, 2024	Sheet 3 of 12		

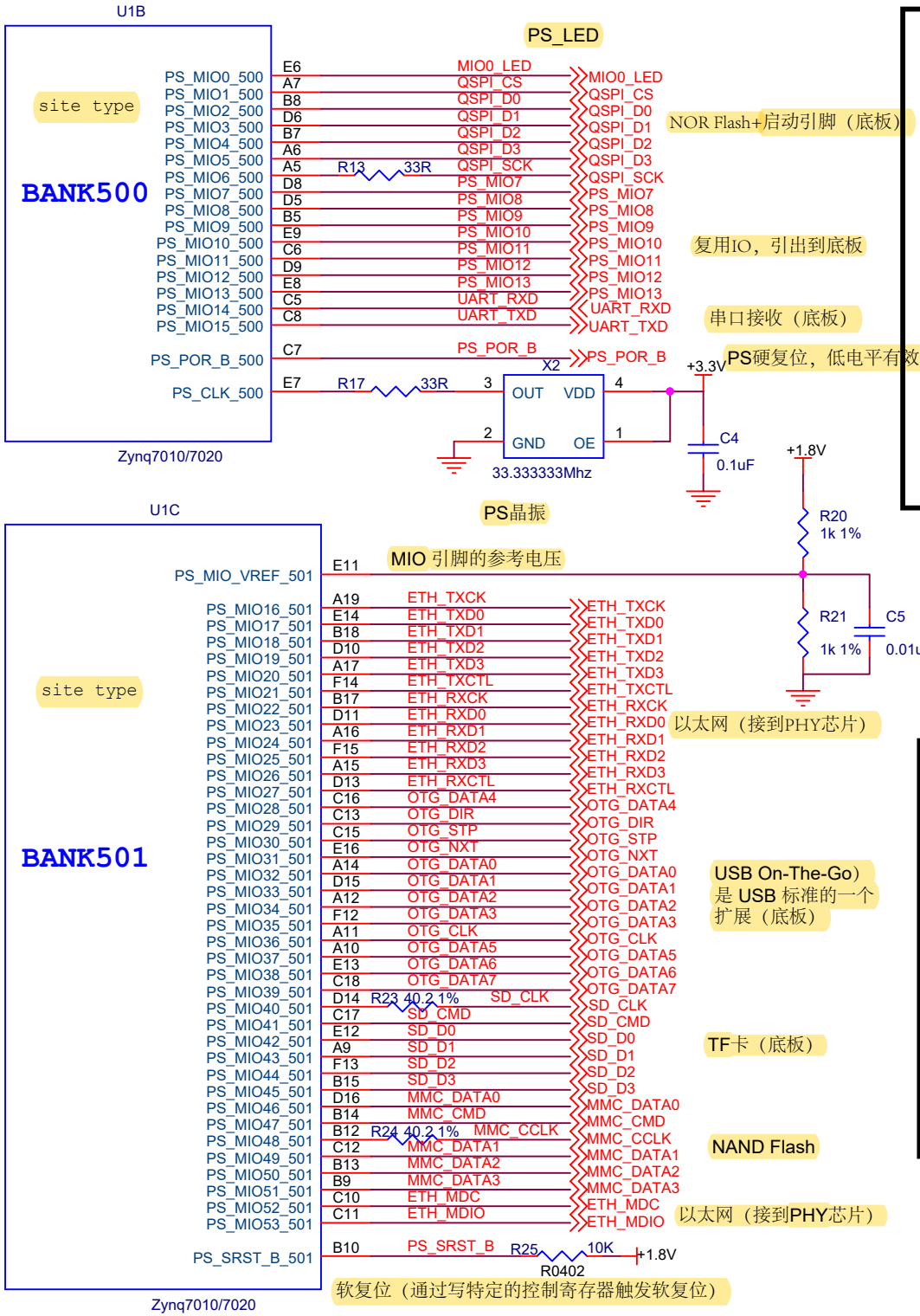

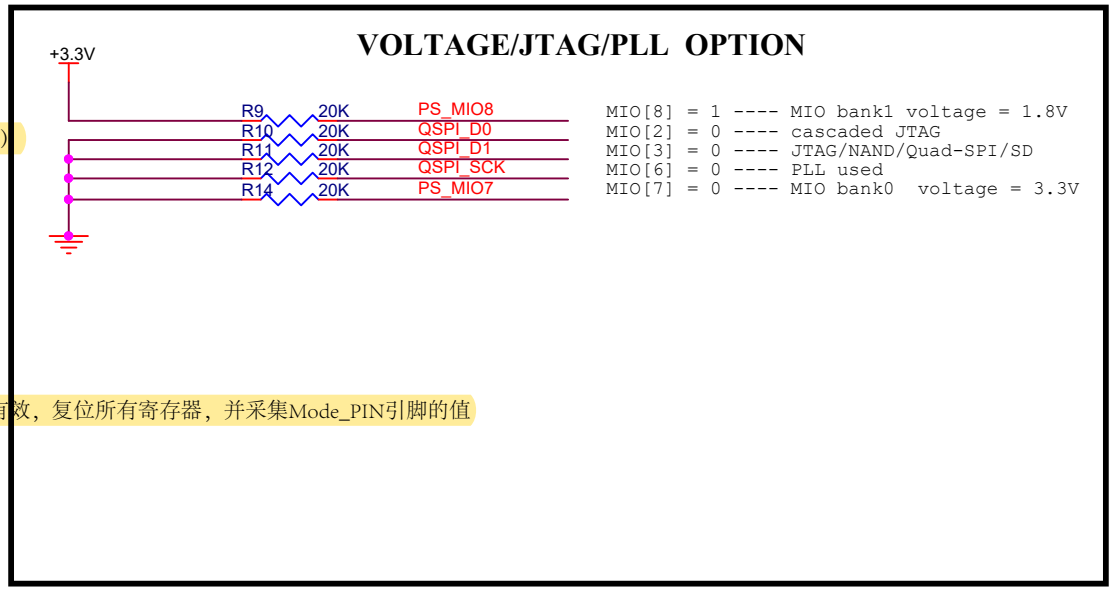

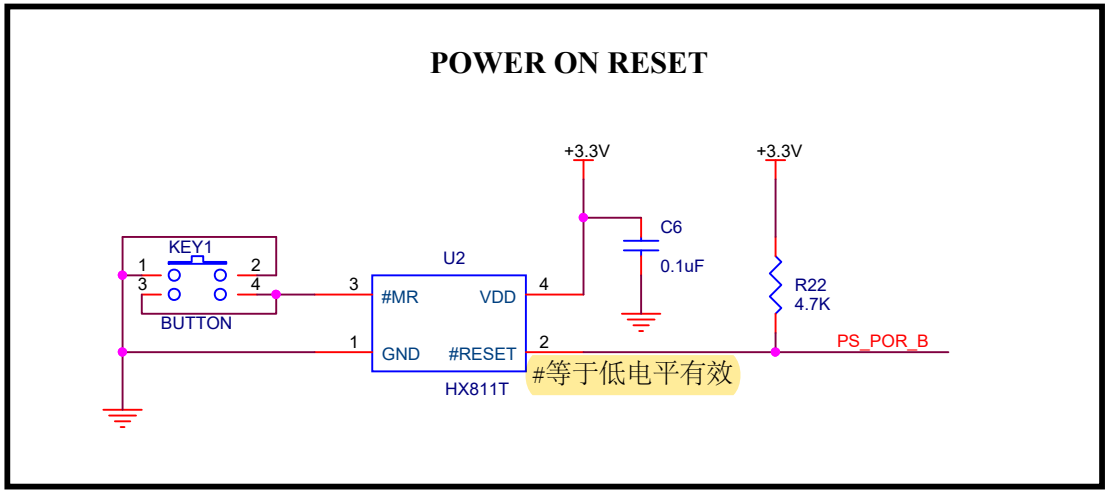

Design Name	ZYNQ-CORE	
Size A4	Page Name 04_FPGA Bank500,Bank501	Rev 1.0
Date: Tuesday, April 23, 2024	Sheet 4 of 12	

DDR引脚

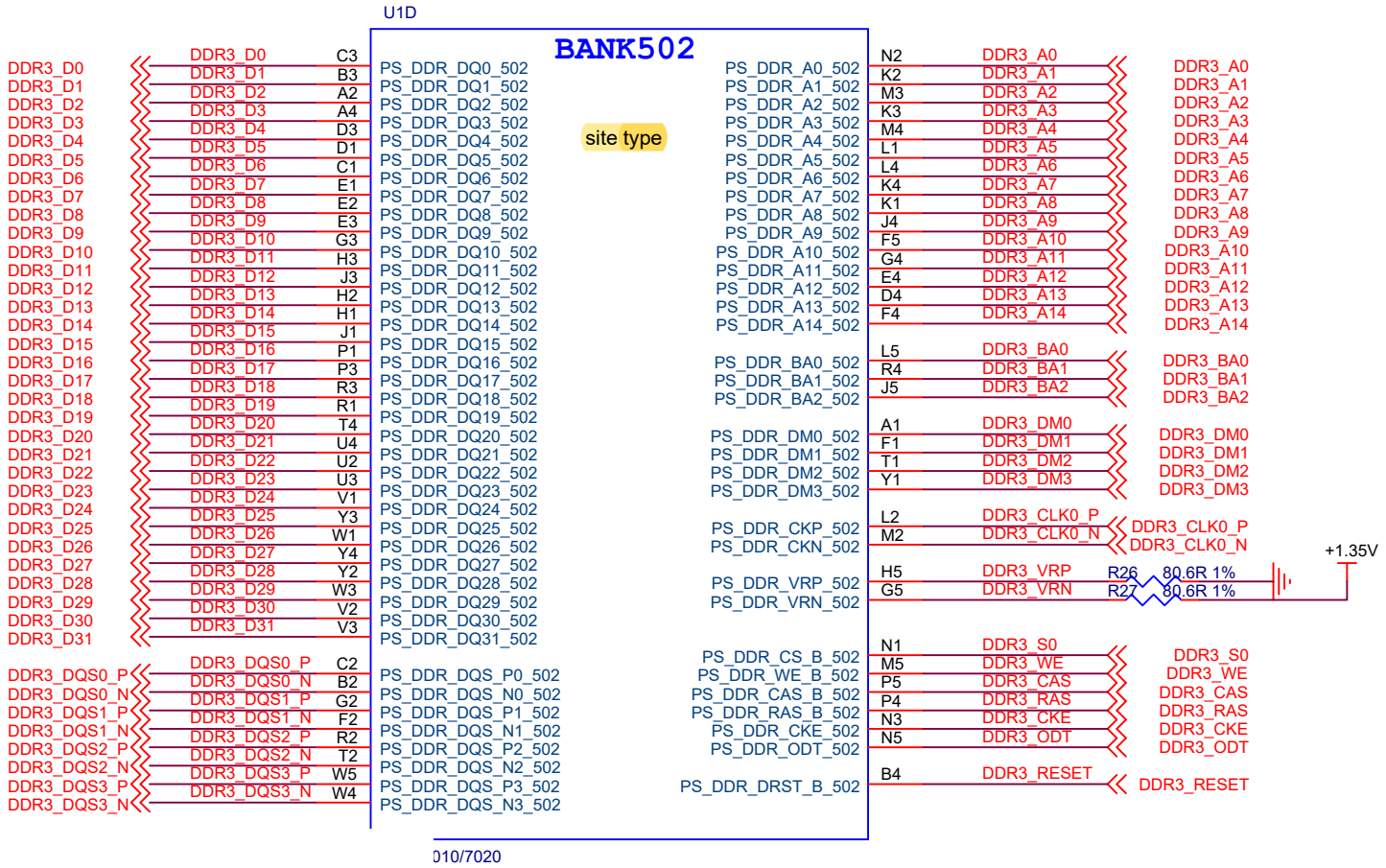

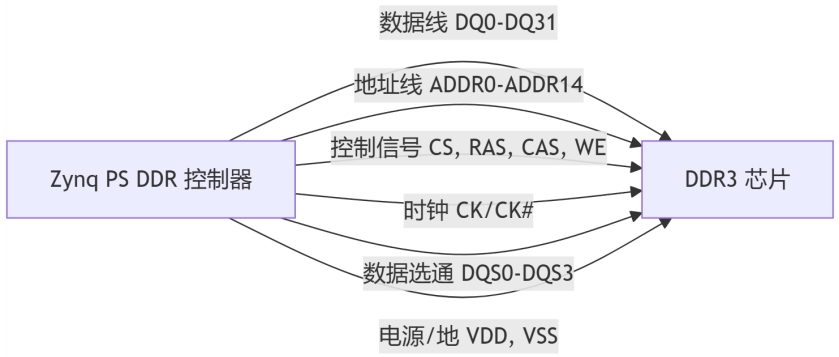

Design Name	ZYNQ-CORE	
Size A4	Page Name 05_FPGA Bank502	Rev 1.0
Date: Tuesday, April 23, 2024	Sheet 5 of 12	

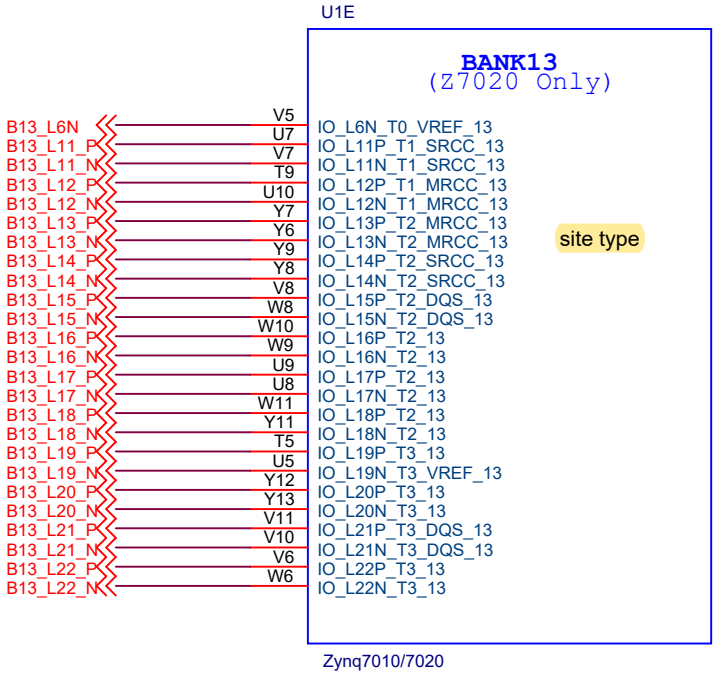

引出到底板

Design Name	ZYNQ-CORE		
Size A4	Page Name 06_Bank_13		Rev 1.0
Date: Tuesday, April 23, 2024	Sheet 6 of 12		

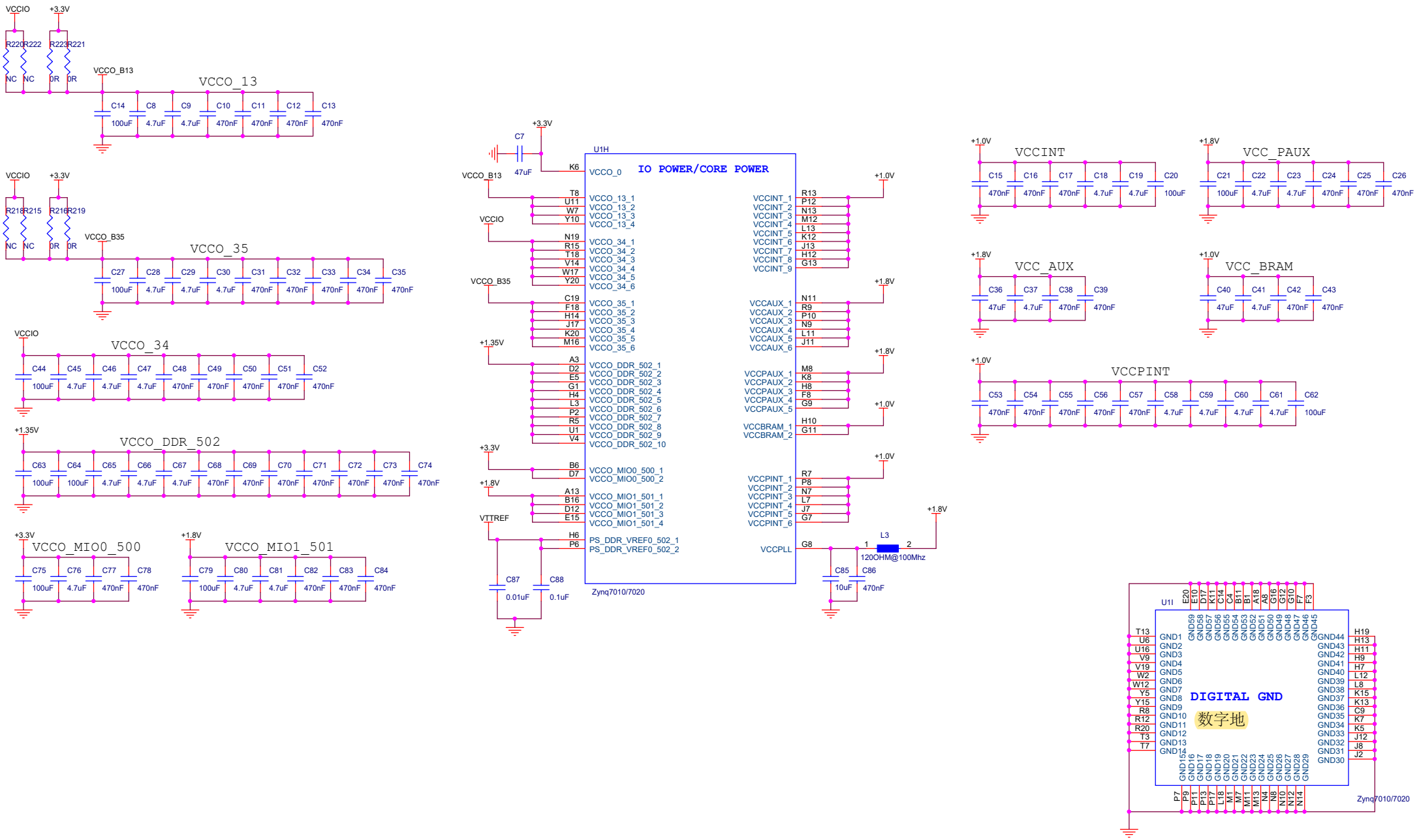

Design Name	ZYNQ-CORE	
Size A3	Page Name 07_FPGA_POWER	Rev 1.0
Date: Tuesday, April 23, 2024	Sheet 7 of 12	

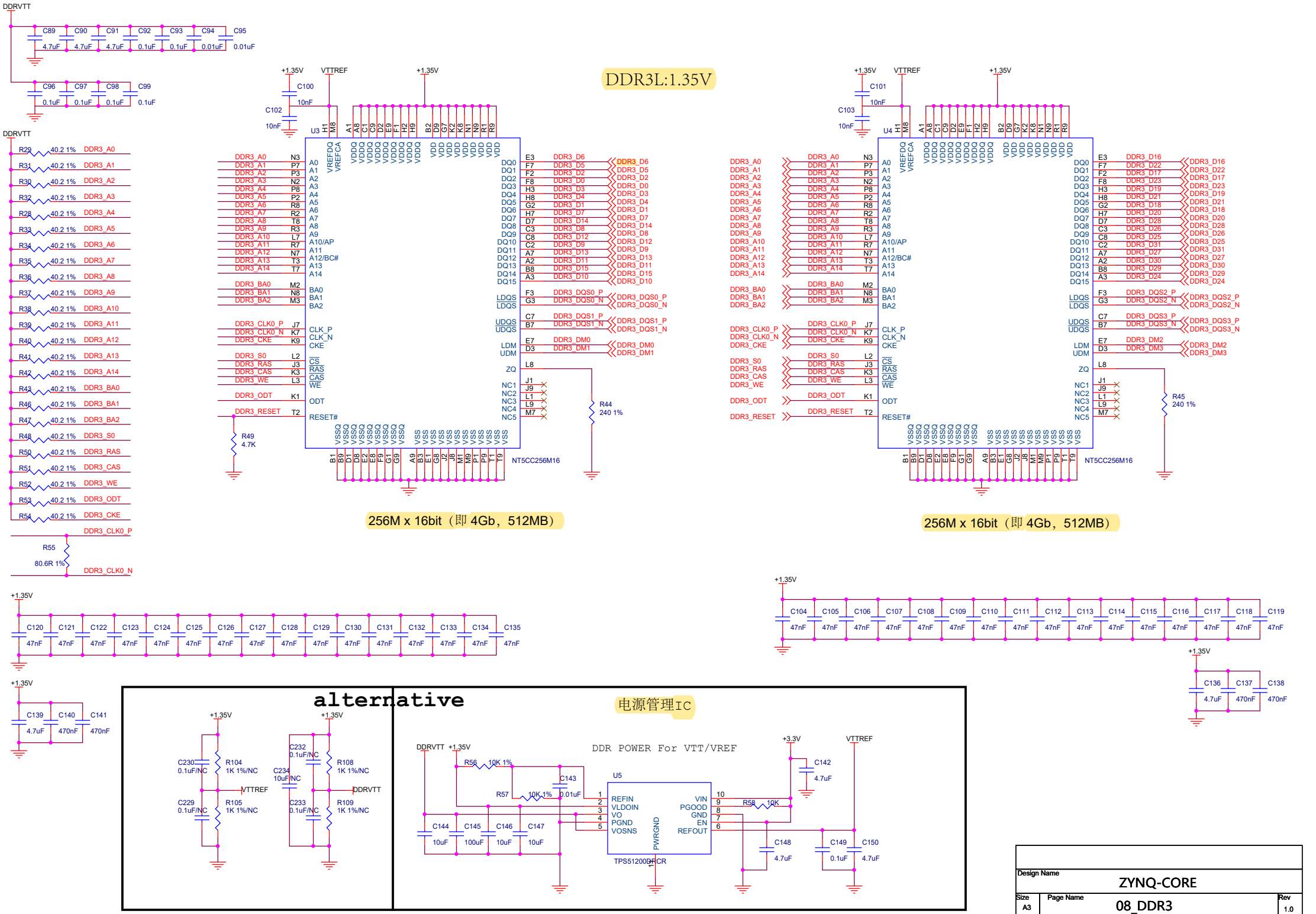
DDR3L:1.35V
256M x 16bit（即4Gb，512MB）
256M x 16bit（即4Gb，512MB）
NT5CC256M16
alternative
电源管理IC
DDR POWER For VTT/VREF
TPS51200DRCR
ZYNQ-CORE
08_DDR3
Tuesday, April 23, 2024

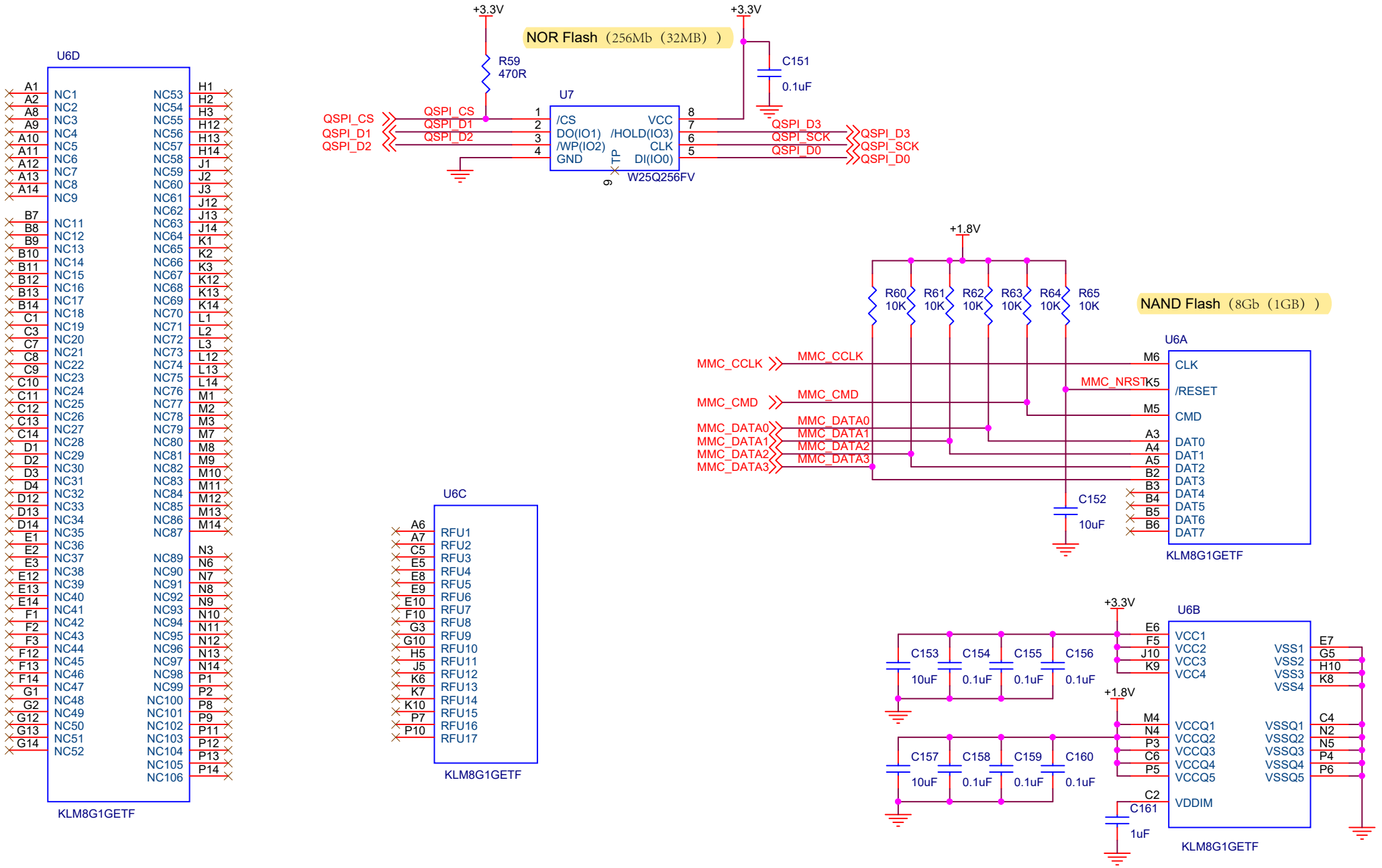

eMMC（嵌入式多媒体卡，embedded MultiMediaCard）

Design Name	ZYNQ-CORE	
Size A4	Page Name 09_eMMC	Rev 1.0
Date: Tuesday, April 23, 2024	Sheet 9 of 12	

Power On Sequnce:
1.0V -> 1.8V -> 1.35V -> 3.3V -> VCCIO

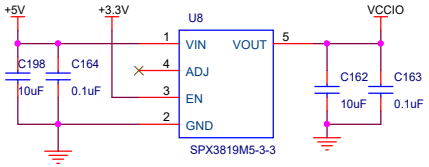

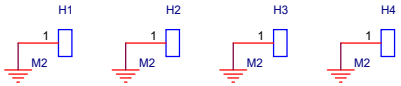

1.0V POWER@3A

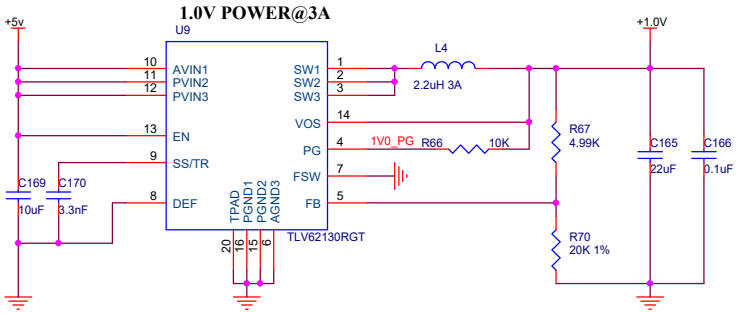

1.8V POWER@3A

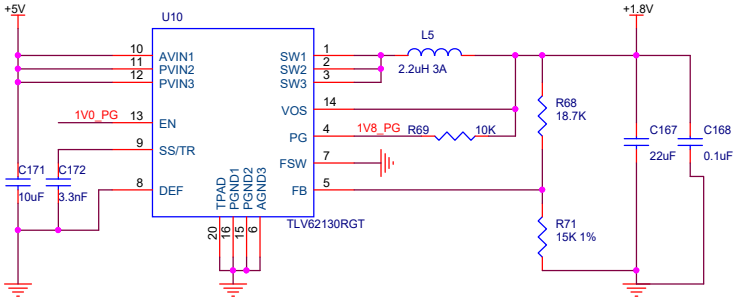

Vout=0.8*R1/R2+0.8

1.35V POWER@3A

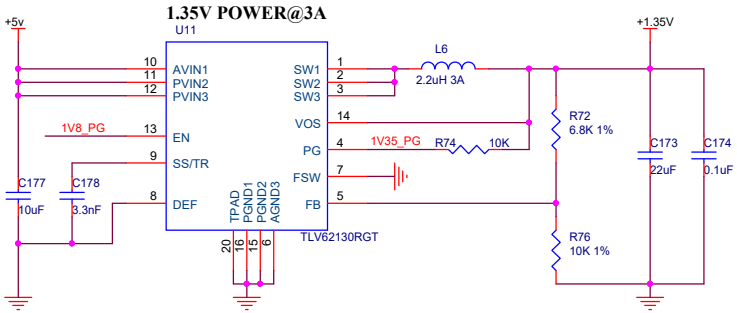

3.3V POWER@3A

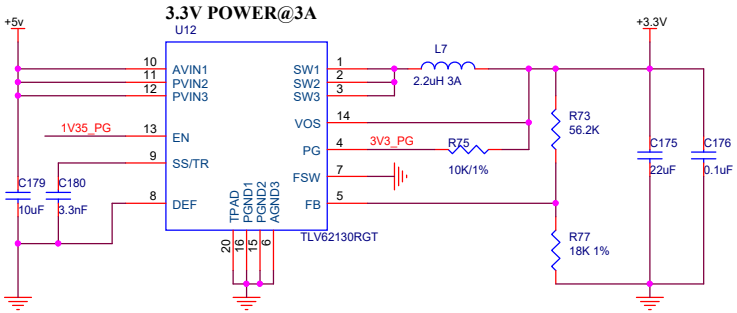

电源

Design Name	ZYNQ-CORE	
Size A3	Page Name 10_POWER	Rev 1.0
Date: Wednesday, June 19, 2024	Sheet 10 of 12	

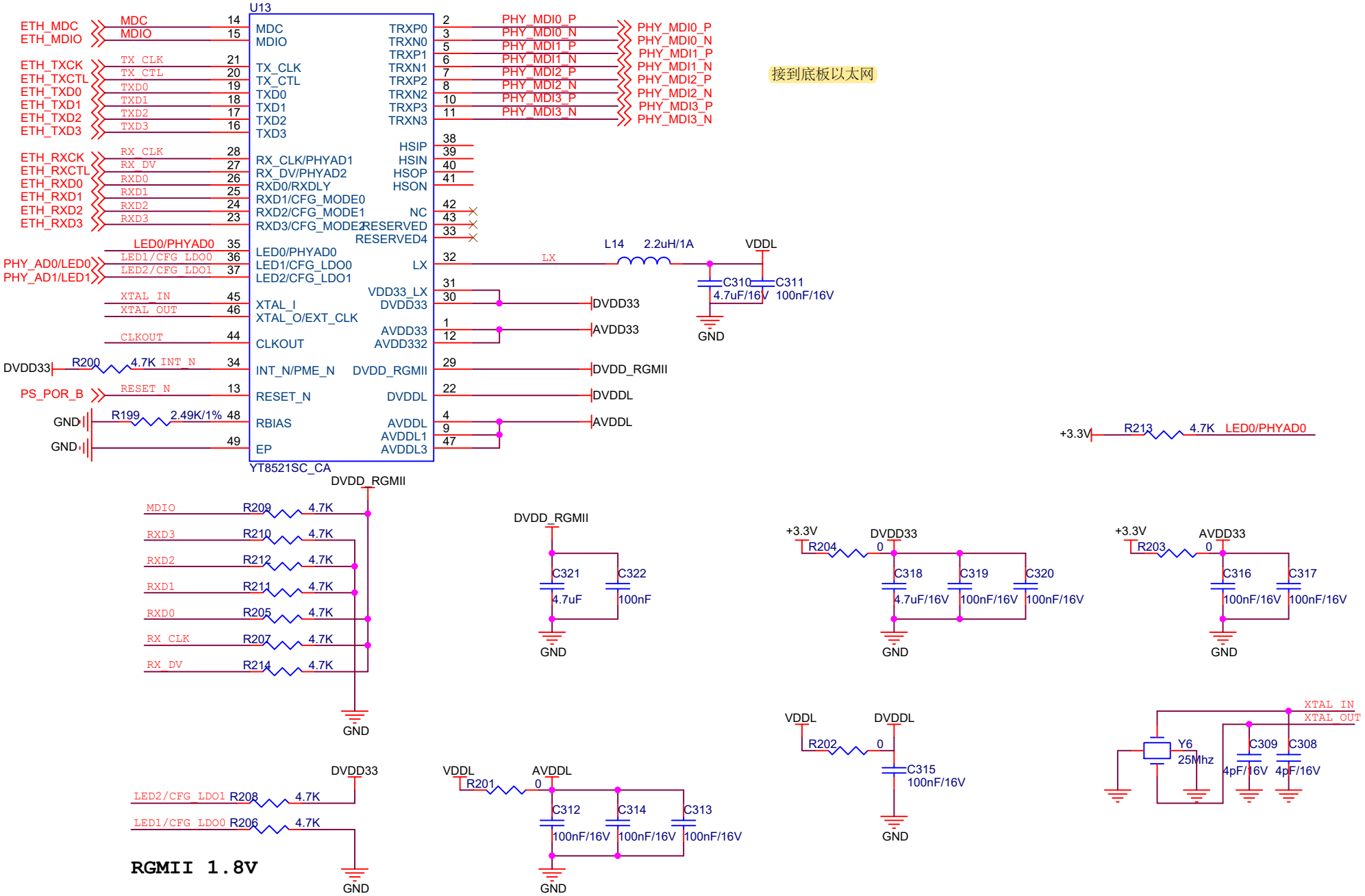

RGMII（Reduced Gigabit Media Independent Interface）是一种用于连接以太网MAC（媒体访问控制）和以太网PHY（物理层设备）的接口标准

Title	<Title>	
Size A4	Document Number <Doc>	Rev <RevCo
Date: Tuesday, April 23, 2024	Sheet 11 of 12	

核心板引出到底板的排针

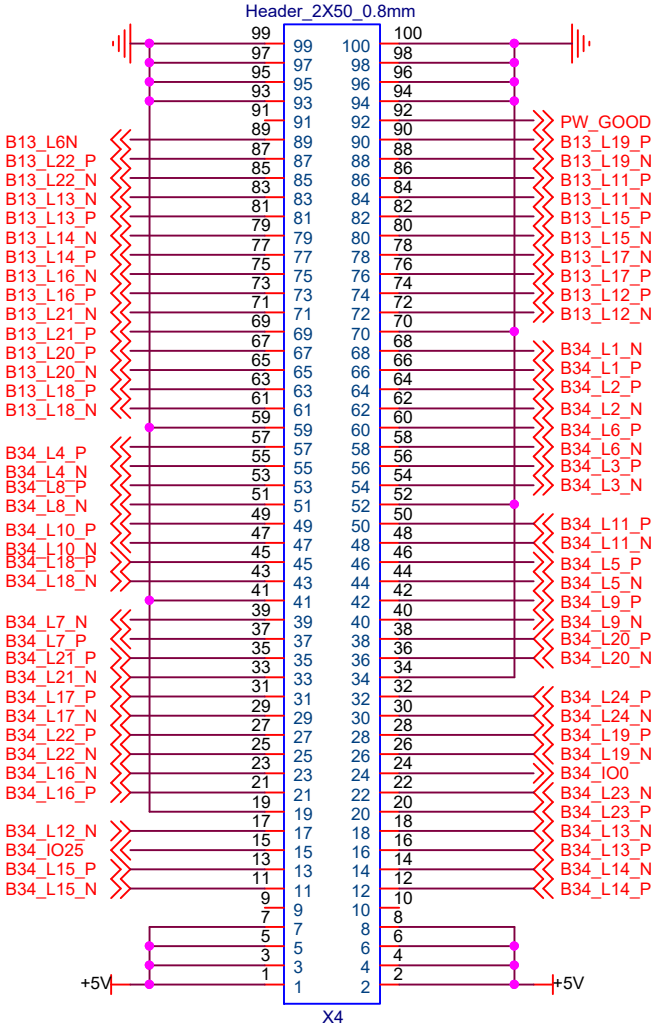

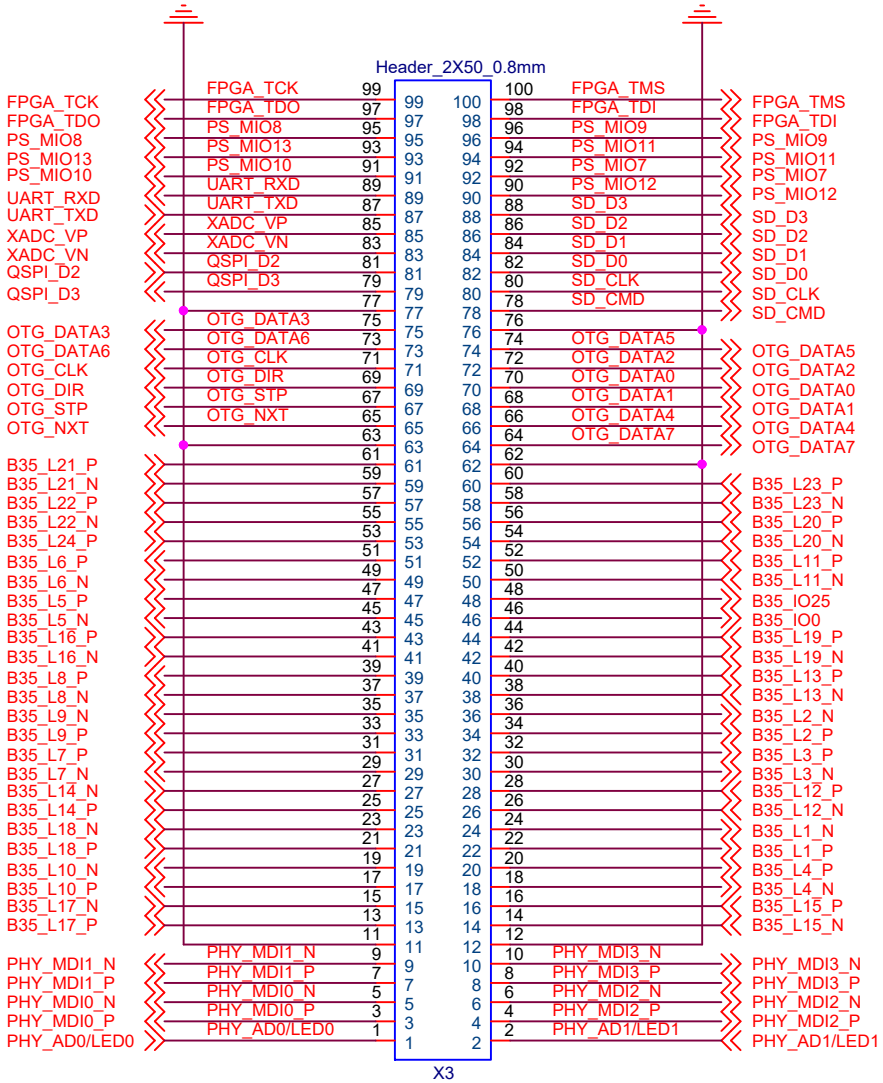

Design Name	ZYNQ-CORE	
Size A4	Page Name 12_CONNECTOR	Rev 1.0
Date: Friday, February 07, 2025	Sheet 12 of 12	