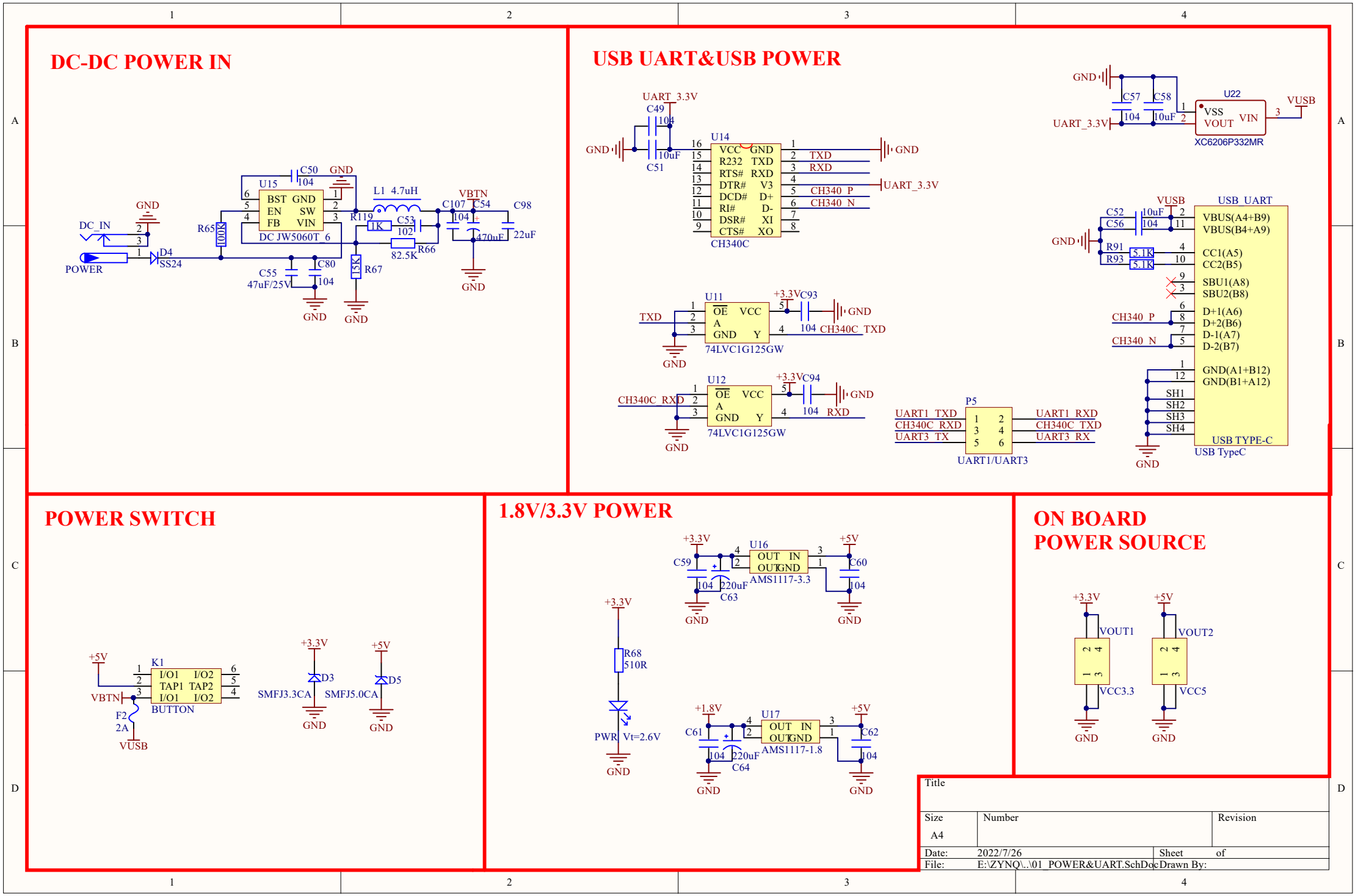

.SchDoc：Altium Designer 原理图文件的扩展名。

CORE_IO

核心板引出到底板的排针

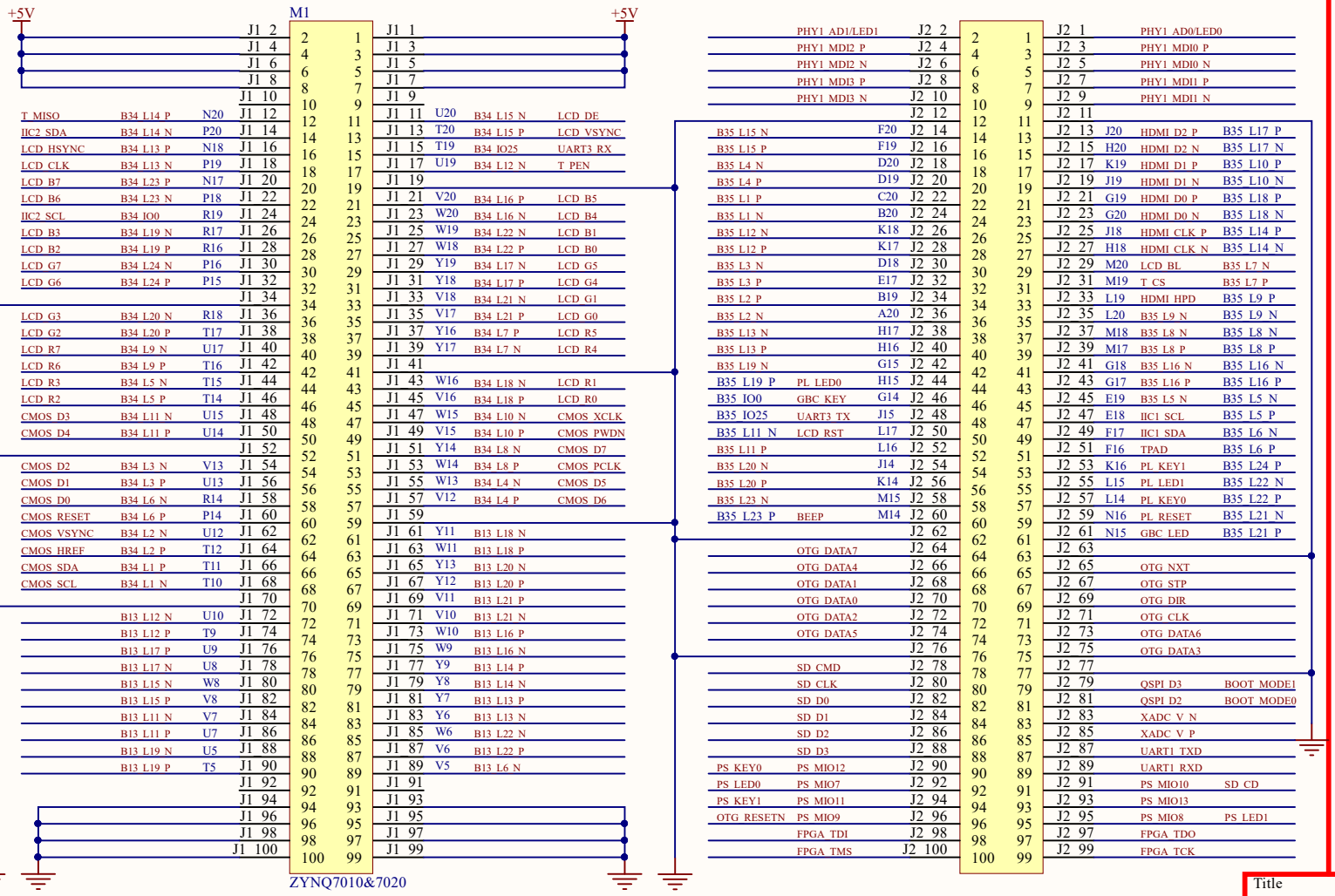

EXT_IO

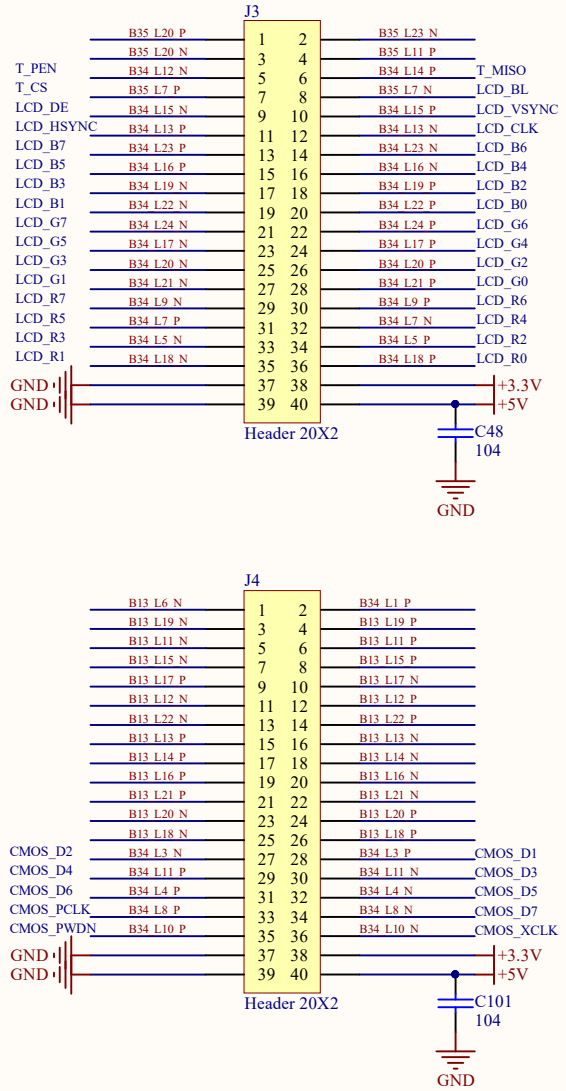

Title			
Size A4	Number		Revision
Date: 2022/7/26		Sheet of	
File: E:\ZYNQ\..\02_IO.SchDoc		Drawn By:	

BOOT OPTION

	MIO 4	MIO 5
BOOT_CFG	1	2
JTAG	ON	ON
NAND	OFF	ON
QSPI	ON	OFF
SD Card	OFF	OFF

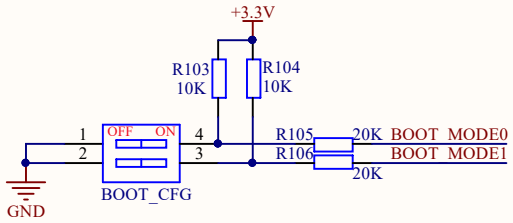

RGB LCD

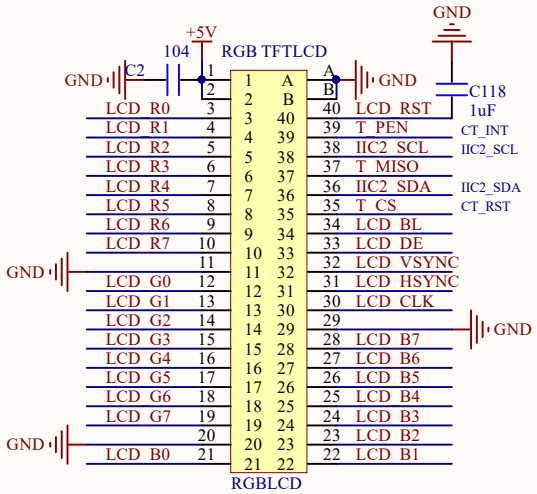

OLED&CAMERA

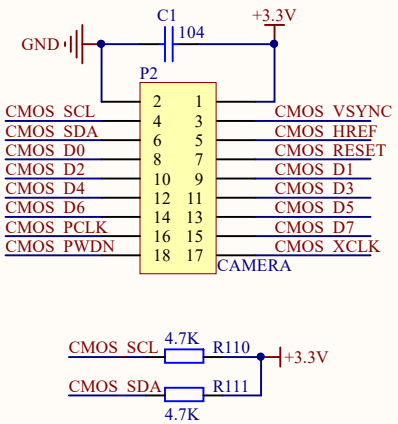

ATK MODULE

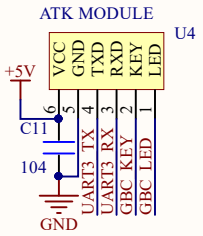

EEPROM

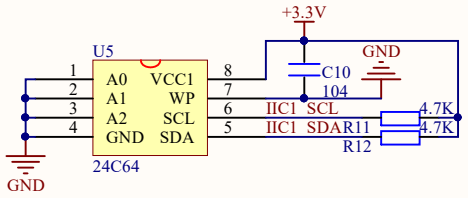

LED

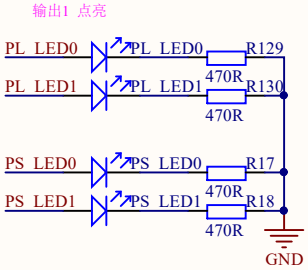

KEY

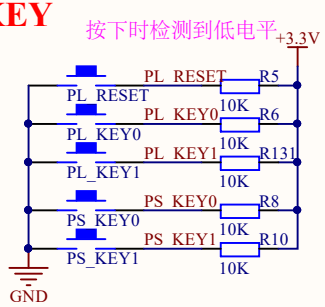

JTAG

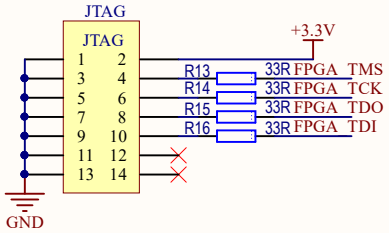

RTC

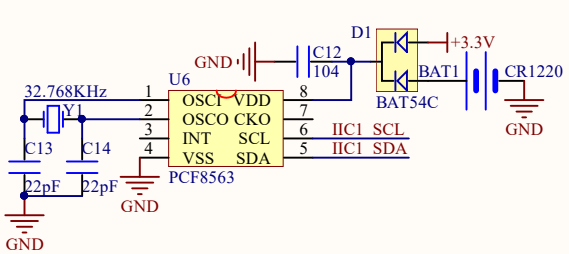

TOUCH KEY

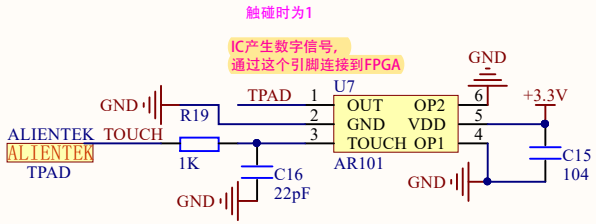

BEEP

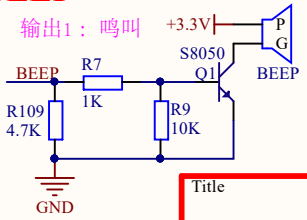

Title		
Size A4	Number	Revision
Date: 2022/7/26		Sheet of
File: E:\ZYNQ\..\03_DEVICE.SchDoc		Drawn By:

ETHERNET(PS)

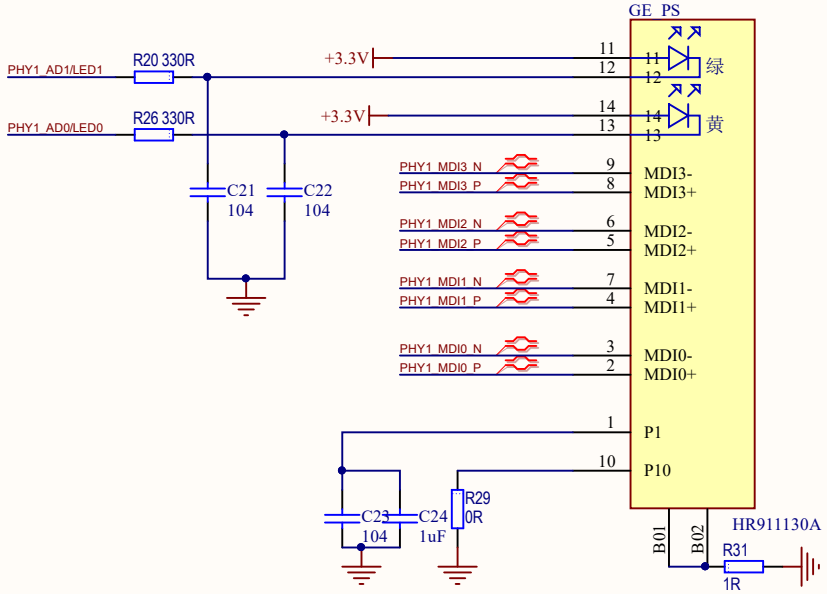

SD CARD

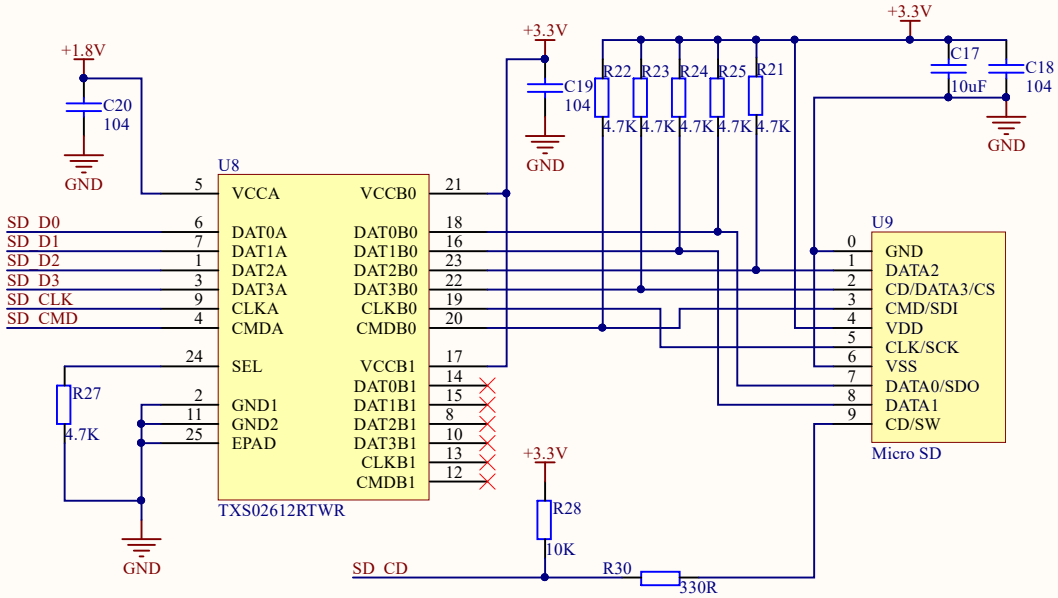

EXT_IO

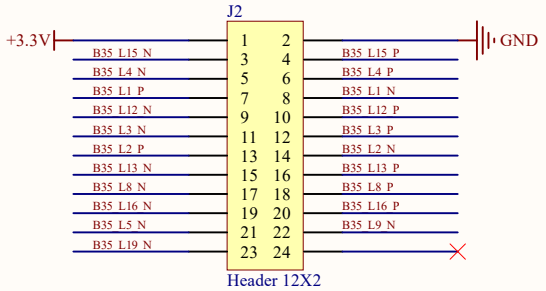

Title		
Size A4	Number	Revision
Date: 2022/7/26	Sheet of	
File: E:\ZYNQ\..\04_ETH&SD&EXT.SchDoc	Drawn By:	

HDMI

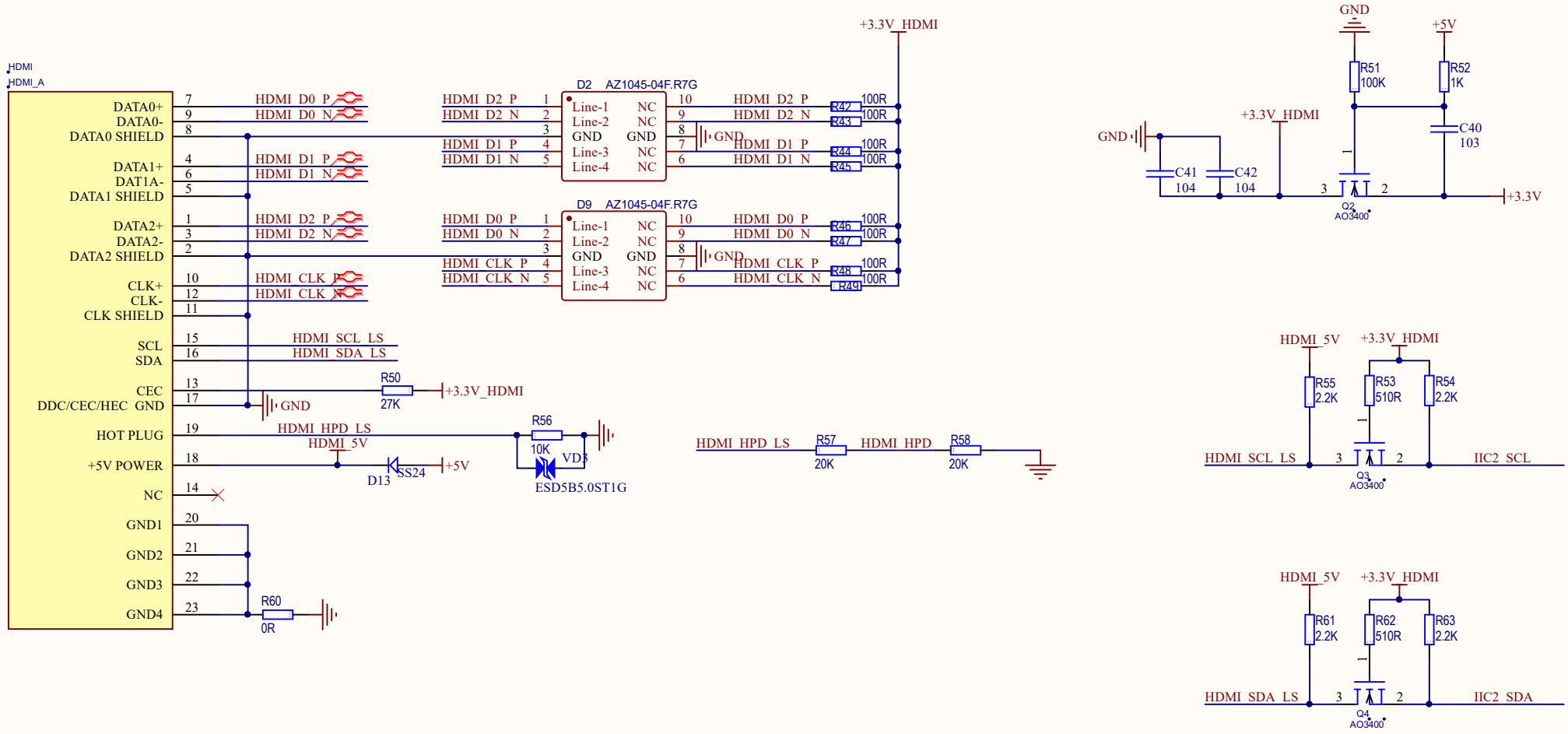

Title		
Size A4	Number	Revision
Date: 2022/7/26		Sheet of
File: E:\ZYNQ\..\05_HDMI.SchDoc		Drawn By:

USB OTG

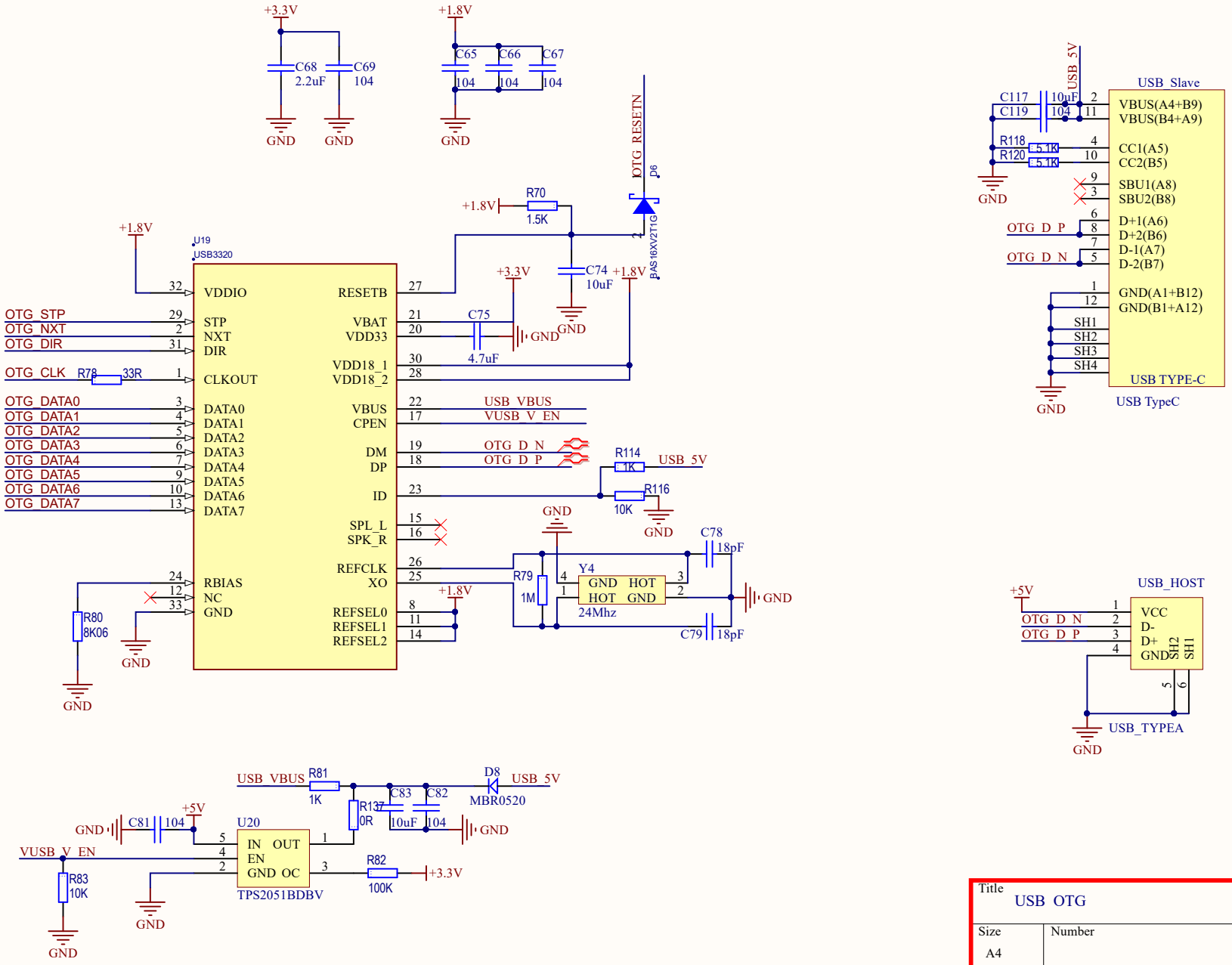

Title	USB OTG		
Size A4	Number	V1.0	Revision
Date: 2022/7/26		Sheet of	
File: E:\ZYNQ\..\06_USB.SchDoc		Drawn By:	