EARTHNET

以太网

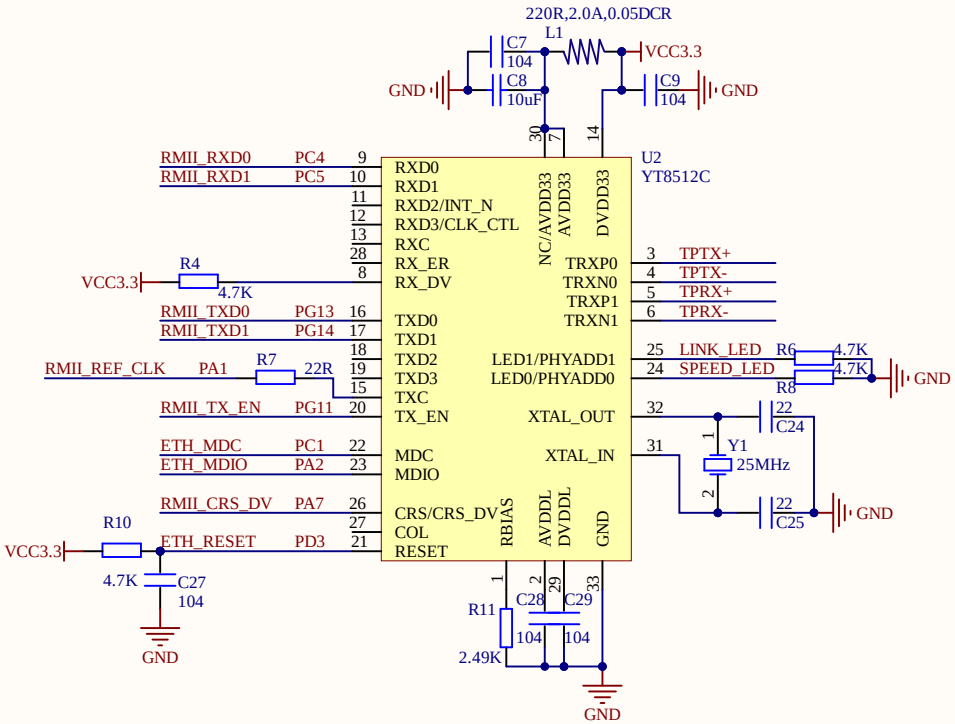

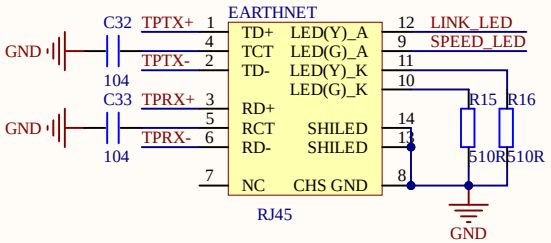

I2S DAC&ADC

数模转换

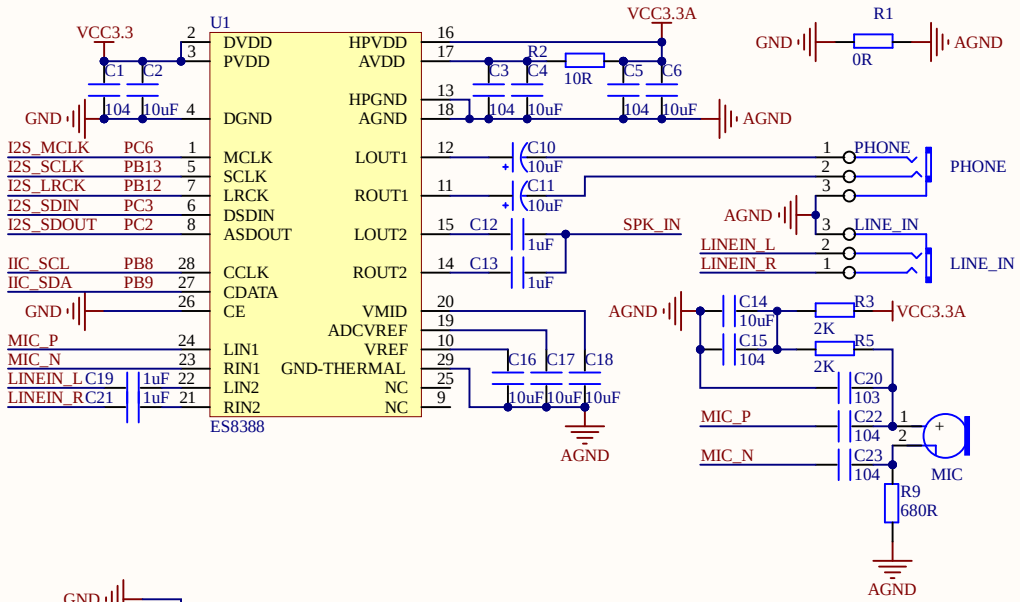

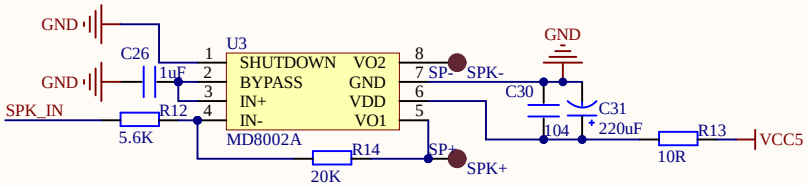

SPK+和SPK-连接开发板自带的喇叭，在开发板底部。

PWM DAC/AUDIO

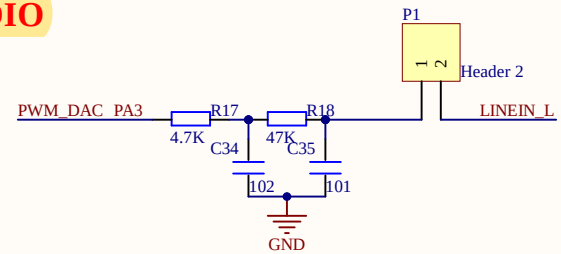

Title: Explorer STM32F407 Board		Cannot open file F:\protel study\元件库\正点原子_竖_NEW.bmp
Author: ATOM@ALIENTEK	Size: A4	
Date: 2023/5/25	File: AUDIO&ETHNET.SchDoc	
Revision: V3.4	Version:	

MCU

U14A

引脚	网络	管脚	编号
唤醒	WK_UP	PA0	34
	RMII_REF_CLK	PA1	35
以太网	ETH_MDIO	USART2_TX	PA2	36
	PWM_DAC	USART2_RX	PA3	37
	STM_DAC	DCMI_HREF	PA4	40
	STM_ADC	PA5	41
	DCMI_PCLK	PA6	42
	RMII_CRS_DV	PA7	43
遥控	REMOTE_IN	DCMI__XCLK	PA8	100
串口1	USART1_TX	PA9	101
	USART1_RX	PA10	102
USB	USB_D-	PA11	103
	USB_D+	PA12	104
	JTMS	PA13	105
JTAG	JTCK	PA14	109
	USB_PWR	JTDI	PA15	110
lcd	T_SCK	PB0	46
	T_PEN	PB1	47
	T_MISO	BOOT1	PB2	48
Flash	SPI1_SCK	JTDO	PB3	133
JTAG	SPI1_MISO	JTRST	PB4	134
	SPI1_MOSI	PB5	135
	DCMI_D5	PB6	136
三轴磁力计、EEPROM	DCMI_VSYNC	PB7	137
	IIC_SCL	PB8	139
	IIC_SDA	PB9	140
串口3	USART3_TX	PB10	69
	USART3_RX	PB11	70
数模转换	I2S_LRCK	PB12	73
	I2S_SCLK	PB13	74
flash	F_CS	PB14	75
lcd	LCD_BL	PB15	76
lcd	GBC_LED	3D_INT	PC0	26
以太网	ETH_MDC	PC1	27
数模转换	I2S_SDOUT	PC2	28
	I2S_SDIN	PC3	29
以太网	RMII_RXD0	PC4	44
	RMII_RXD1	PC5	45
	I2S_MCLK	DCMI_D0	PC6	96
	DCMI_D1	PC7	97
sd卡	SDIO_D0	DCMI_D2	PC8	98
	SDIO_D1	DCMI_D3	PC9	99
	SDIO_D2	PC10	111
	SDIO_D3	DCMI_D4	PC11	112
	SDIO_SCK	PC12	113
	T_CS	PC13	7
			8
			9

管脚	网络	编号	网络
PA0-WKUP/U2_CTS/U4_TX/ETH_MII_CRS/TIM2_CH1_ETR/TIM5_CH1/TIM8_ETR/ADC123_IN0			
PA1/U2_RTS/U4_RX/ETH_RMII_REF_CLK/ETH_MII_RX_CLK/TIM2_CH2/TIM5_CH2/ADC123_IN1			
PA2/U2_TX/TIM2_CH3/TIM5_CH3/TIM9_CH1/ETH_MDIO/ADC123_IN2			
PA3/U2_RX/TIM2_CH4/TIM5_CH4/TIM9_CH2/OTG_HS_ULPI_D0/ETH_MII_COL/ADC123_IN3			
PA4/SPI1_NSS/U2_CK/DCMI_HSYNC/OTG_HS_SOF/I2S3_WS/DAC1_OUT/ADC12_IN4	BOOT0	138	BOOT0 启动模式
PA5/SPI1_SCK/OTG_HS_ULPI_CK/TIM2_CH1_ETR/TIM8_CH1N/DAC2_OUT/ADC12_IN5			
PA6/SPI1_MISO/TIM1_BKIN/TIM3_CH1/TIM8_BKIN/TIM13_CH1/DCMI_PIXCLK/ADC12_IN6			
PA7/SPI1_MOSI/TIM1_CH1N/TIM3_CH2/TIM8_CH1N/TIM14_CH1/ETH_MII_RX_DV/ETH_RMII_CRS_DV/ADC12_IN7	VSS	130	
PA8/TIM1_CH1/U1_CK/I2C3_SCL/MCO1/OTG_FS_SOF	VSS	120	
PA9/TIM1_CH2/U1_TX/I2C3_SMBA/OTG_FS_VBUS/DCMI_D0	VSS	107	
PA10/TIM1_CH3/U1_RX/OTG_FS_ID/DCMI_D1	VSS	94	
PA11/TIM1_CH4/U1_CTS/CAN1_RX/OTG_FS_DM	VSS	83	GND
PA12/TIM1_ETR/U1_RTS/CAN1_TX/OTG_FS_DP	VSS	61	
PA13/JTMS_SWDIO	VSS	51	
PA14/JTCK_SWCLK	VSS	38	
PA15/JTDI/SPI1_NSS/SPI3_NSS/TIM2_CH1_ETR/I2S3_WS	VSS	16	
PB0/TIM1_CH2N/TIM3_CH3/TIM8_CH2N/OTG_HS_ULPI_D1/ETH_MII_RXD2/ADC12_IN8	VDD	144	
PB1/TIM1_CH3N/TIM3_CH4/TIM8_CH3N/OTG_HS_INTN/ETH_MII_RXD3/ADC12_IN9	VDD	131	
PB2/BOOT1	VDD	121	
PB3/JTDO/TRACESWO/TIM2_CH2/SPI1_SCK/SPI3_SCK/I2S3_CK	VDD	108	
PB4/JNTRST/TIM3_CH1/SPI1_MISO/SPI3_MISO/I2S3ext_SD	VDD	95	
PB5/TIM3_CH2/SPI1_MOSI/SPI3_MOSI/CAN2_RX/I2C1_SMBA/OTG_HS_ULPI_D7/ETH_PPS_OUT/DCMI_D10/I2S3_SD	VDD	84	VCC3.3M
PB6/TIM4_CH1/U1_TX/CAN2_TX/I2C1_SCL/DCMI_D5	VDD	72	
PB7/TIM4_CH2/U1_RX/FSMC_NL/I2C1_SDA/DCMI_VSYNC	VDD	62	
PB8/TIM4_CH3/TIM10_CH1/CAN1_RX/SDIO_D4/ETH_MII_TXD3/I2C1_SCL/DCMI_D6	VDD	39	
PB9/TIM4_CH4/TIM11_CH1/CAN1_TX/SDIO_D5/SPI2_NSS/I2C1_SDA/DCMI_D7/I2S2_WS	VDD	52	
PB10/SPI2_SCK/TIM2_CH3/U3_TX/I2C2_SCL/OTG_HS_ULPI_D3/I2S2_CK	VDD	17	
PB11/TIM2_CH4/U3_RX/I2C2_SDA/HS_ULPI_D4/ETH_MII_TX_EN/ETH_RMII_TX_EN	VDD	30	
PB12/SPI2_NSS/TIM1_BKIN/U3_CK/CAN2_RX/I2C2_SMBA/OTG_HS_ULPI_D5/OTG_HS_ID/ETH_MII_TXD0/ETH_RMII_TXD0/I2S2_WS			
PB13/SPI2_SCK/TIM1_CH1N/U3_CTS/CAN2_TX/OTG_HS_ULPI_D6/OTG_HS_VBUS/ETH_MII_TXD1/ETH_RMII_TXD1/I2S2_CK			
PB14/SPI2_MISO/TIM1_CH2N/TIM8_CH2N/TIM12_CH1/U3_RTS/OTG_HS_DM/I2S2ext_SD			
PB15/SPI2_MOSI/TIM1_CH3N/TIM8_CH3N/TIM12_CH2/OTG_HS_DP/I2S2_SD			
	PH0-OSC_IN	23	8MHz
	PH1-OSC_OUT	24	
PC0/OTG_HS_ULPI_STP/ADC123_IN10			
PC1/ETH_MDC/ADC123_IN11	NRST	25	RESET
PC2/SPI2_MISO/OTG_HS_ULPI_DIR/ETH_MII_TXD2/I2S2ext_SD/ADC123_IN12			
PC3/SPI2_MOSI/OTG_HS_ULPI_NXT/ETH_MII_TX_CLK/I2S2_SD/ADC123_IN13	VBAT	6	VBAT
PC4/ETH_MII_RXD0/ETH_RMII_RXD0/ADC12_IN14			
PC5/ETH_MII_RXD1/ETH_RMII_RXD1/ADC12_IN15	Vref+	32	VREF+ 参考电压
PC6/TIM3_CH1/TIM8_CH1/U6_TX/SDIO_D6/DCMI_D0/I2S2_MCK			
PC7/TIM3_CH2/TIM8_CH2/U6_RX/SDIO_D7/DCMI_D1/I2S3_MCK	Vcap_1	71	
PC8/TIM3_CH3/TIM8_CH3/U6_CK/SDIO_D0/DCMI_D2			
PC9/TIM3_CH4/TIM8_CH4/I2C3_SDA/SDIO_D1/DCMI_D3/MCO2/I2S_CKIN	Vcap_2	106	
PC10/SPI3_SCK/U3_TX/U4_TX/SDIO_D2/DCMI_D8/I2S3_CK			
PC11/SPI3_MISO/U3_RX/U4_RX/SDIO_D3/DCMI_D4/I2S3ext_SD	VDDA	33	VDDA
PC12/SPI3_MOSI/U3_CK/U5_TX/SDIO_CK/DCMI_D9/I2S3_SD			
PC13/RTC_AF1	VSSA	31	
PC14-OSC32_IN			
PC15-OSC32_OUT	PDR_ON	143	

STM32F407ZGT6

Power Down Reset

RESET

VCC3.3, R51 10K, RESET, C65 104, GND

VREF

参考电压 已连接VDDA，看开发板跳线帽

P6 VREF_SEL, VREF+, VDDA, C66 225, GND

VBAT

VCC3.3M, D4 1N4148, D5 1N4148, VBAT, C73 104, BAT 电池, GND

C74 10, Y3 32.768K, C75 10, GND

VCC3.3 VCC3.3M, 0R R56, 0R R57

VCC3.3M, C76 C77 C78 C79 C80 C81 C82 C83 C84 C85 C86 C87, 104 104 104 104 104 104 104 104 104 104 104 104, GND

R55，默认焊接
R54，不焊接

R56/R57是为了维修方便而增加的2个电阻，大家实际设计电路板时候，可以不加这两个电阻.VCC3.3M直接连接3.3V即可.

Title: Explorer STM32F407 Board	
Author: ATOM@ALIENTEK	Size: A4
Date: 2023/5/25	File: CORE_ABC.SchDoc
Revision: V3.4	Version:

Cannot open file F:\protel study\元件库\正点原子_竖_NEW.bmp

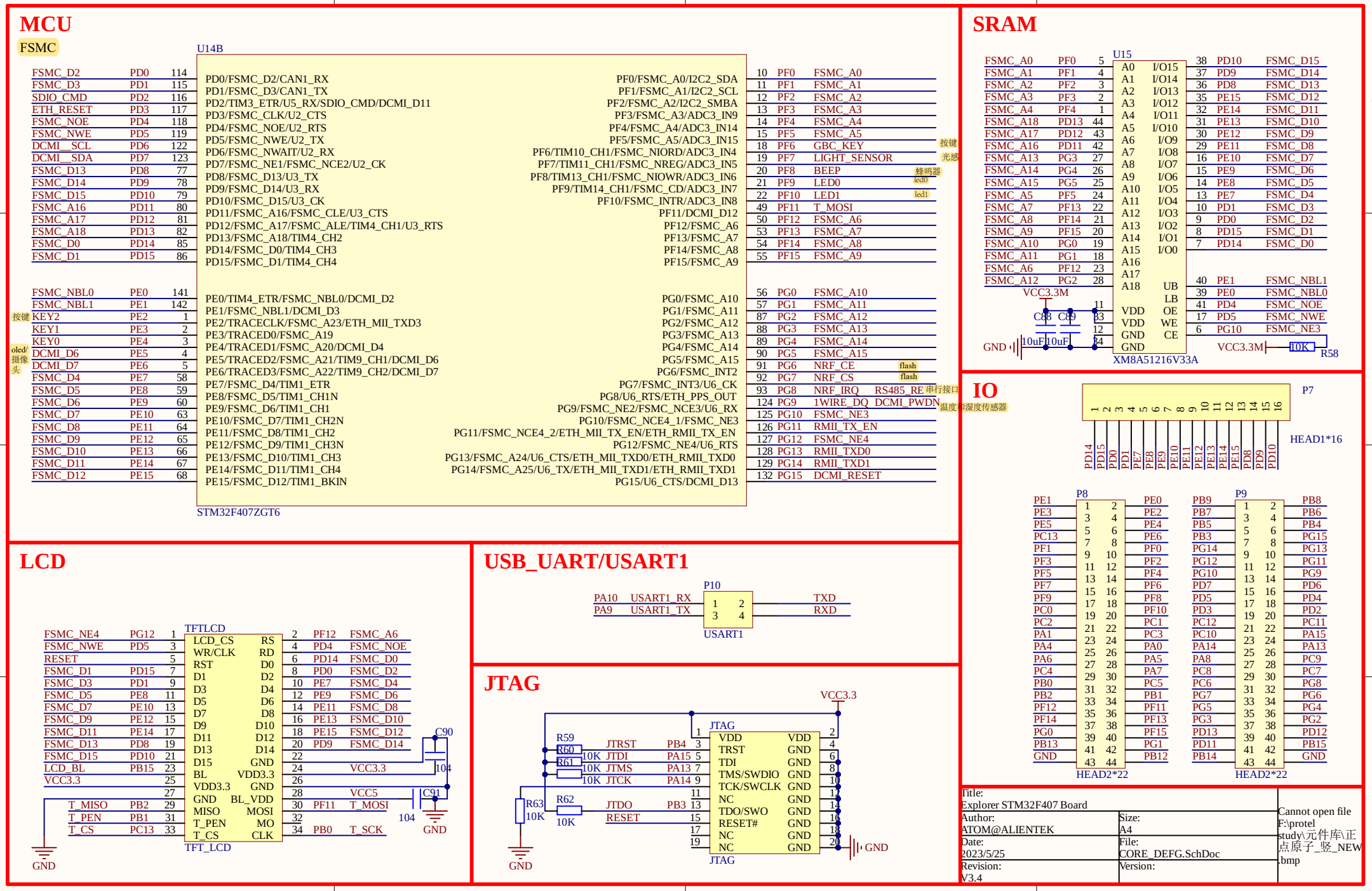
MCU
FSMC
U14B
STM32F407ZGT6
SRAM
U15
XM8A51216V33A
VCC3.3M
GND
IO
P7
HEAD1*16
P8
P9
HEAD2*22
LCD
TFTLCD
TFT_LCD
USB_UART/USART1
P10
USART1
JTAG
VCC3.3
Title:
Explorer STM32F407 Board
Author:
ATOM@ALIENTEK
Size:
A4
Date:
2023/5/25
File:
CORE_DEFG.SchDoc
Revision:
V3.4
Version:
Cannot open file F:\protel study\元件库\正点原子_竖_NEW.bmp

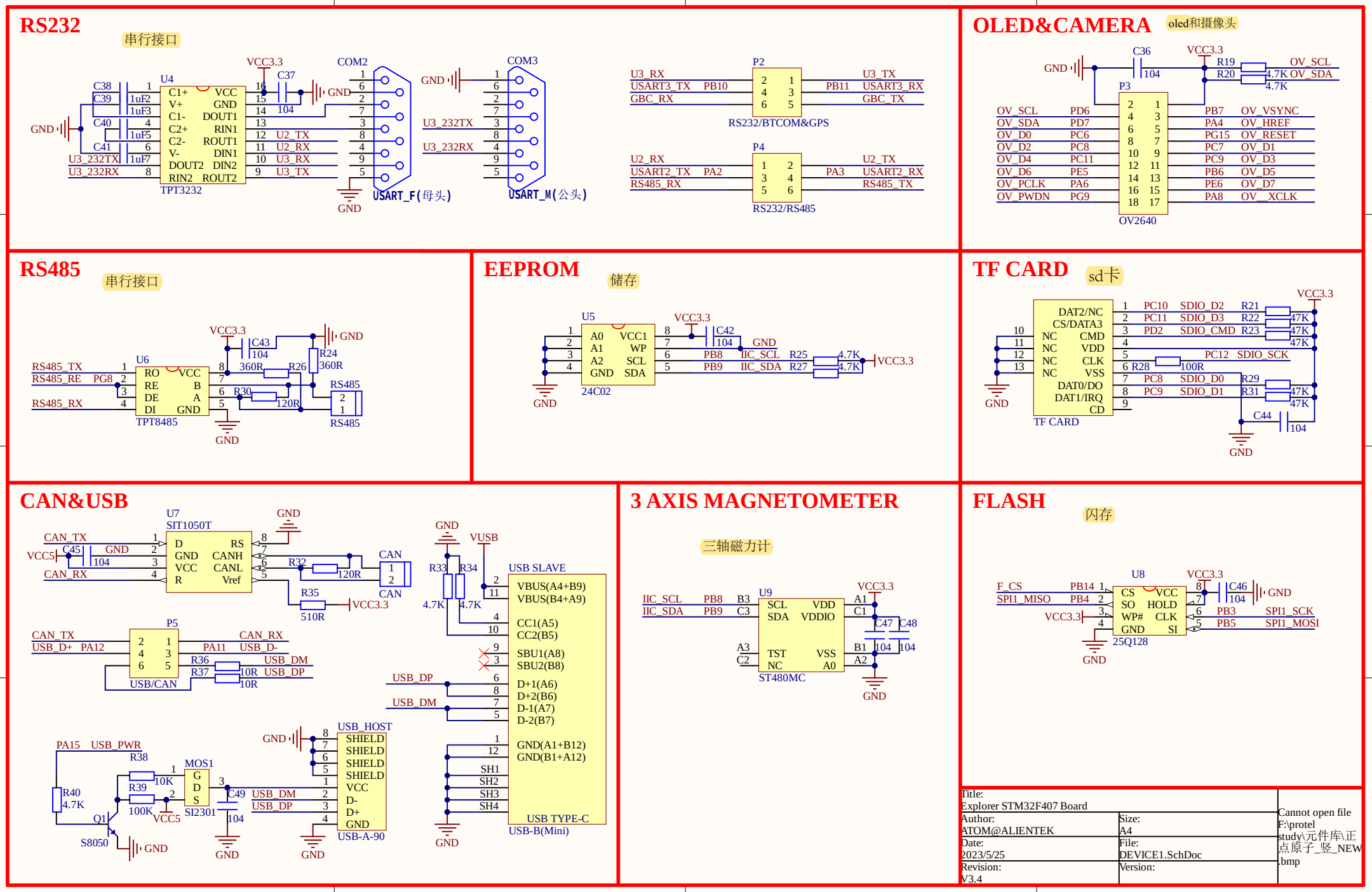
RS232
串行接口
U4
TPT3232
VCC3.3
COM2
COM3
USART_F(母头)
USART_M(公头)
U3_232TX
U3_232RX
U2_TX
U2_RX
U3_TX
U3_RX
P2
RS232/BTCOM&GPS
P4
RS232/RS485
OLED&CAMERA
oled和摄像头
P3
OV2640
OV_SCL
OV_SDA
OV_D0
OV_D2
OV_D4
OV_D6
OV_PCLK
OV_PWDN
OV_VSYNC
OV_HREF
OV_RESET
OV_D1
OV_D3
OV_D5
OV_D7
OV_XCLK
RS485
串行接口
U6
TPT8485
RS485_TX
RS485_RX
EEPROM
储存
U5
24C02
IIC_SCL
IIC_SDA
TF CARD
sd卡
SDIO_D2
SDIO_CMD
SDIO_SCK
SDIO_D0
SDIO_D1
CAN&USB
U7
SIT1050T
CAN_TX
CAN_RX
CAN
P5
USB/CAN
USB_D+
USB_D-
USB_DM
USB_DP
USB_HOST
USB-A-90
USB SLAVE
USB TYPE-C
USB-B(Mini)
MOS1
SI2301
S8050
PA15
USB_PWR
3 AXIS MAGNETOMETER
三轴磁力计
U9
ST480MC
FLASH
闪存
U8
25Q128
F_CS
SPI1_MISO
SPI1_SCK
SPI1_MOSI
Title:
Explorer STM32F407 Board
Author:
ATOM@ALIENTEK
Size:
A4
Date:
2023/5/25
File:
DEVICE1.SchDoc
Revision:
V3.4
Version:
Cannot open file F:\protel study\元件库\正点原子_竖_NEW.bmp

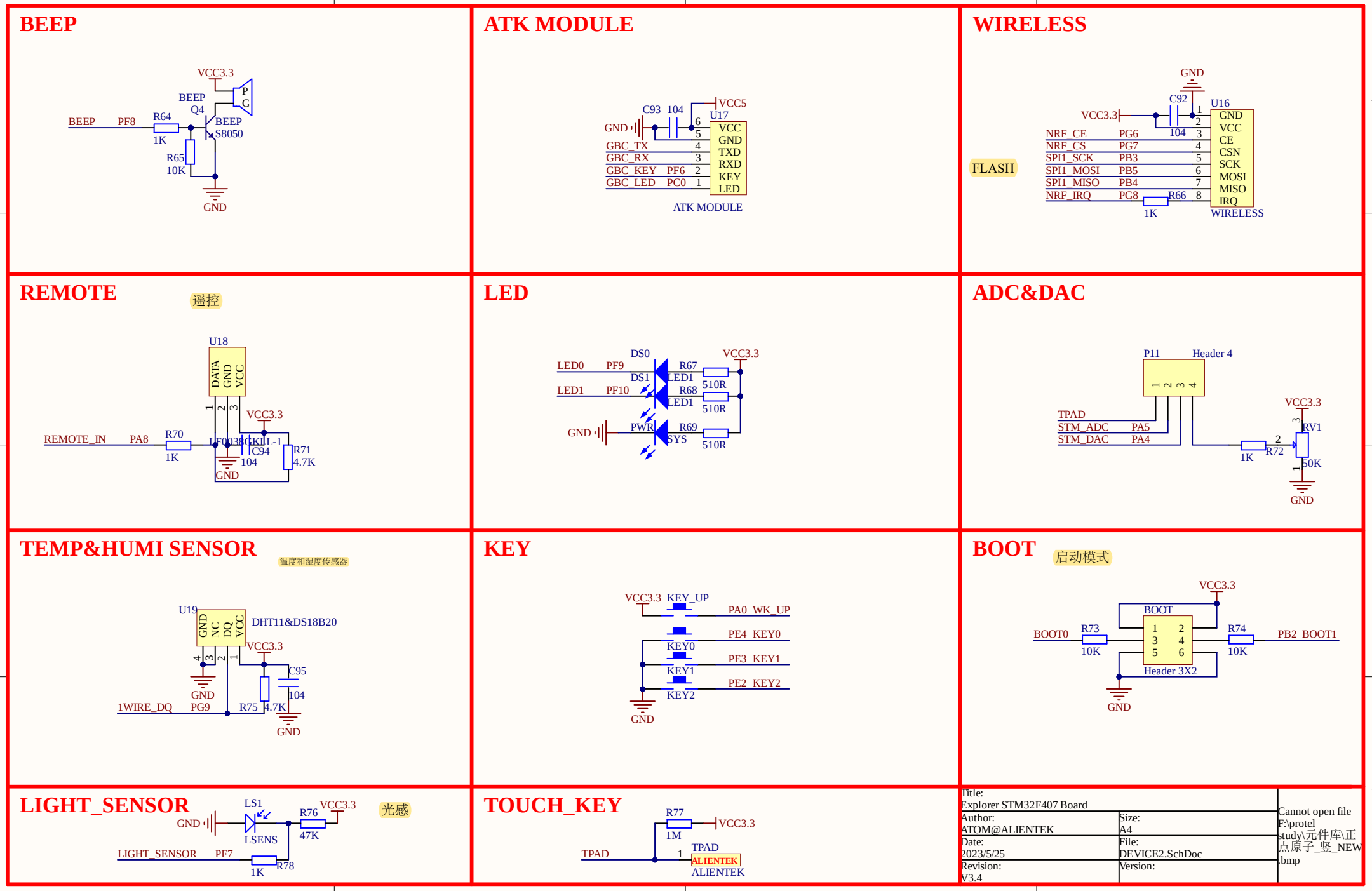
BEEP
VCC3.3
BEEP
Q4
P
G
BEEP
PF8
R64
1K
BEEP
S8050
R65
10K
GND
ATK MODULE
C93
104
VCC5
U17
GND
GBC_TX
GBC_RX
GBC_KEY PF6
GBC_LED PC0
VCC
GND
TXD
RXD
KEY
LED
ATK MODULE
WIRELESS
GND
C92
U16
VCC3.3
104
NRF_CE PG6
NRF_CS PG7
SPI1_SCK PB3
SPI1_MOSI PB5
SPI1_MISO PB4
NRF_IRQ PG8
R66
1K
GND
VCC
CE
CSN
SCK
MOSI
MISO
IRQ
WIRELESS
FLASH
REMOTE
遥控
U18
DATA
GND
VCC
VCC3.3
REMOTE_IN
PA8
R70
1K
IR0038CKIL-1
C94
104
R71
4.7K
GND
LED
DS0
VCC3.3
LED0
PF9
R67
DS1
LED1
510R
LED1
PF10
R68
LED1
510R
GND
PWR
R69
SYS
510R
ADC&DAC
P11
Header 4
TPAD
STM_ADC PA5
STM_DAC PA4
VCC3.3
RV1
1K
R72
50K
GND
TEMP&HUMI SENSOR
温度和湿度传感器
U19
GND
NC
DQ
VCC
DHT11&DS18B20
VCC3.3
C95
104
GND
1WIRE_DQ
PG9
R75
4.7K
GND
KEY
VCC3.3
KEY_UP
PA0 WK_UP
PE4 KEY0
KEY0
PE3 KEY1
KEY1
PE2 KEY2
KEY2
GND
BOOT
启动模式
VCC3.3
BOOT
BOOT0
R73
10K
R74
10K
PB2 BOOT1
Header 3X2
GND
LIGHT_SENSOR
LS1
VCC3.3
光感
GND
R76
47K
LSENS
LIGHT_SENSOR
PF7
R78
1K
TOUCH_KEY
R77
VCC3.3
1M
TPAD
TPAD
ALIENTEK
ALIENTEK
Title:
Explorer STM32F407 Board
Author:
ATOM@ALIENTEK
Size:
A4
Date:
2023/5/25
File:
DEVICE2.SchDoc
Revision:
V3.4
Version:
Cannot open file
F:\protel
study\元件库\正
点原子_竖_NEW
.bmp

电源

DC POWER IN

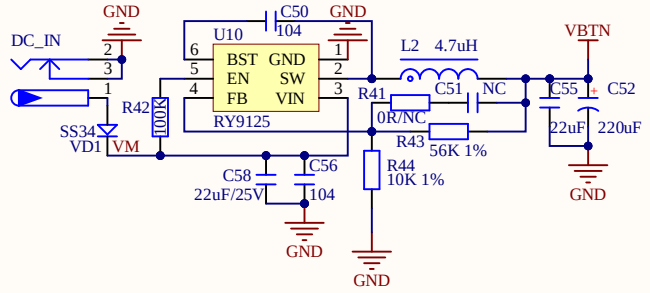

3.3V & POWER SWITCH

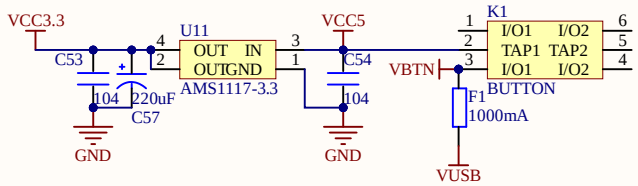

ANALOG POWER

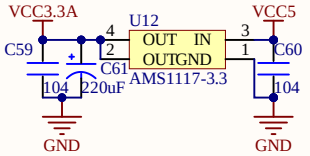

ON BOARD POWER SOURCE

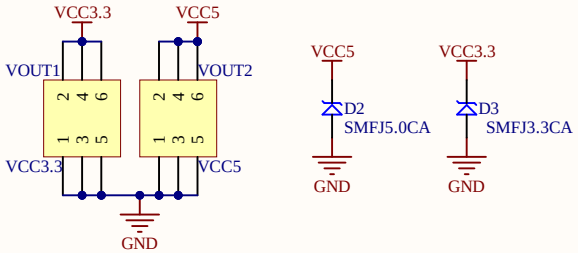

USB USART&USB POWER

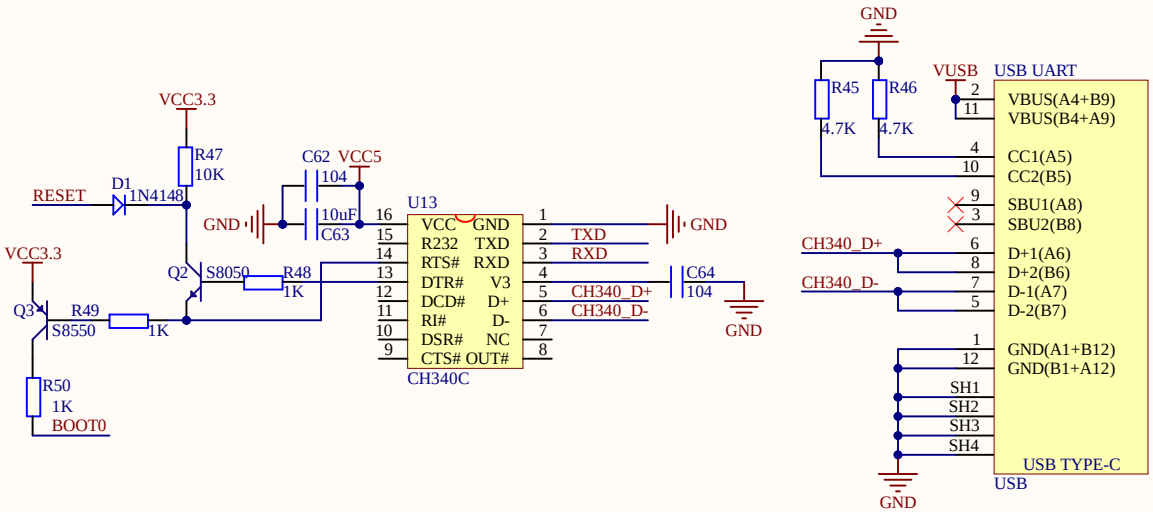

Title: Explorer STM32F407 Board		Cannot open file F:\protel study\元件库\正点原子_竖_NEW.bmp
Author: ATOM@ALIENTEK	Size: A4	
Date: 2023/5/25	File: POWER&USB_USART.SchDoc	
Revision: V3.4	Version:	

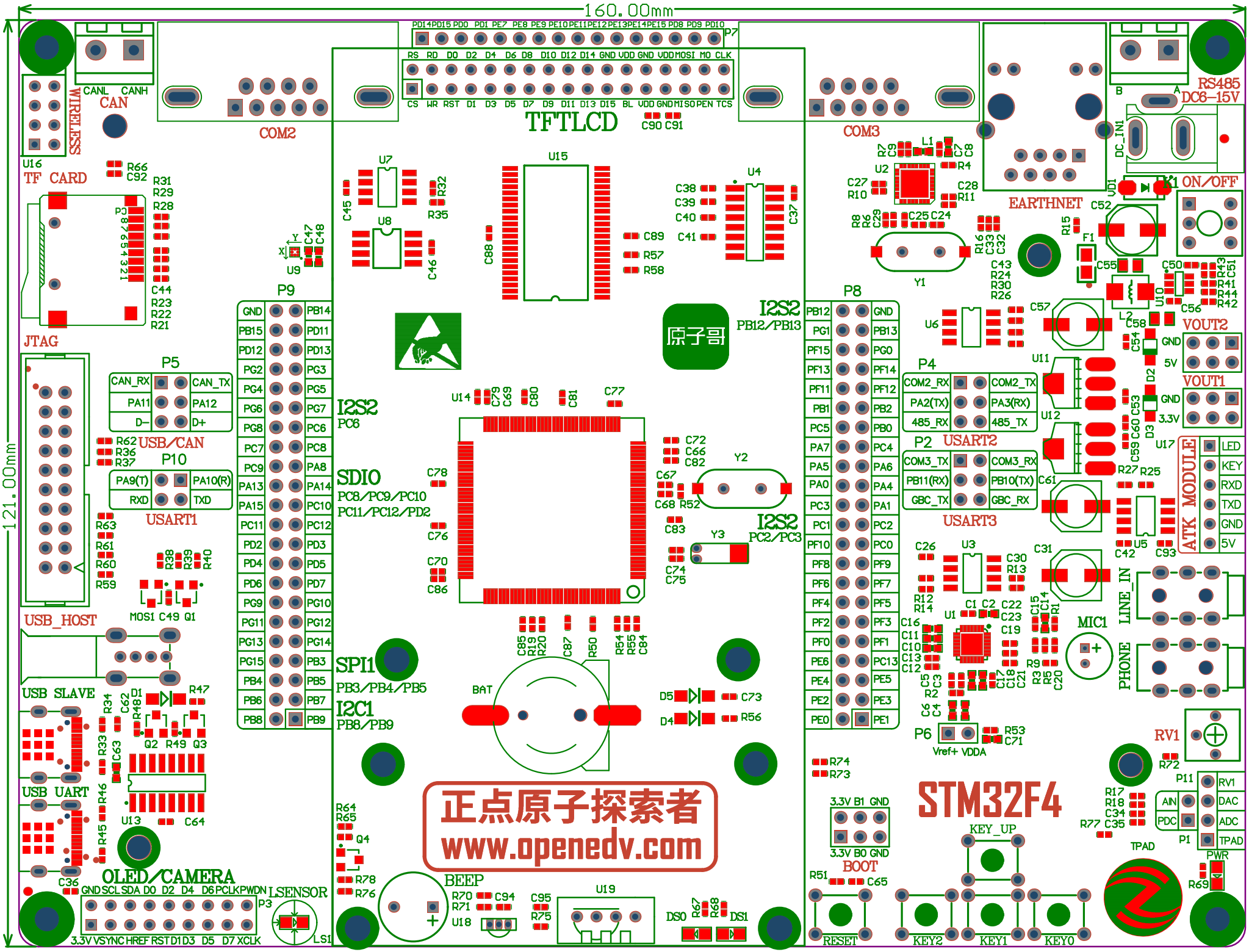
160.00mm
121.00mm
TFTLCD
P7
COM2
COM3
CAN
CANL CANH
WIRELESS
U16
TF CARD
JTAG
P5
CAN_RX CAN_TX
PA11 PA12
D- D+
USB/CAN
P10
PA9(T) PA10(R)
RXD TXD
USART1
USB_HOST
USB SLAVE
USB UART
OLED/CAMERA
P3
LSENSOR
LS1
P9
I2S2
PB12/PB13
I2S2
PC6
SDIO
PC8/PC9/PC10
PC11/PC12/PD2
I2S2
PC2/PC3
SPI1
PB3/PB4/PB5
I2C1
PB8/PB9
BAT
BEEP
U19
DS0 DS1
STM32F4
正点原子探索者
www.openedv.com
P8
P4
COM2_RX COM2_TX
PA2(TX) PA3(RX)
485_RX 485_TX
P2 USART2
COM3_TX COM3_RX
PB11(RX) PB10(TX)
GBC_TX GBC_RX
USART3
P6
Vref+ VDDA
3.3V B1 GND
3.3V B0 GND
BOOT
RESET
KEY_UP
KEY2 KEY1 KEY0
EARTHNET
RS485
DC6-15V
ON/OFF
VOUT2
VOUT1
ATK MODULE
LED
KEY
RXD
TXD
GND
5V
LINE_IN
PHONE
MIC1
RV1
P11
RV1
DAC
ADC
TPAD
AIN
PDC
P1
TPAD
PWR