8088_processor

This page contains the 8088 procesor, clock chip, and PIC. It also contains the logic needed to latch addresses and buffer the data bus.

File: 8088_processor.kicad_sch

8088_memory

This page contains the SRAM modules and EEPROM for storing the BIOS. It also contains the selection logic to activate the appropriate chip given the input address.

File: 8088_memory.kicad_sch

8088_io_timer

This page contains the peripheral selection logic as well as the IO devices.

File: 8088_io_timer.kicad_sch

8088_aux_io

This page contains additional copies of the IO devices.

File: 8088_aux_io.kicad_sch

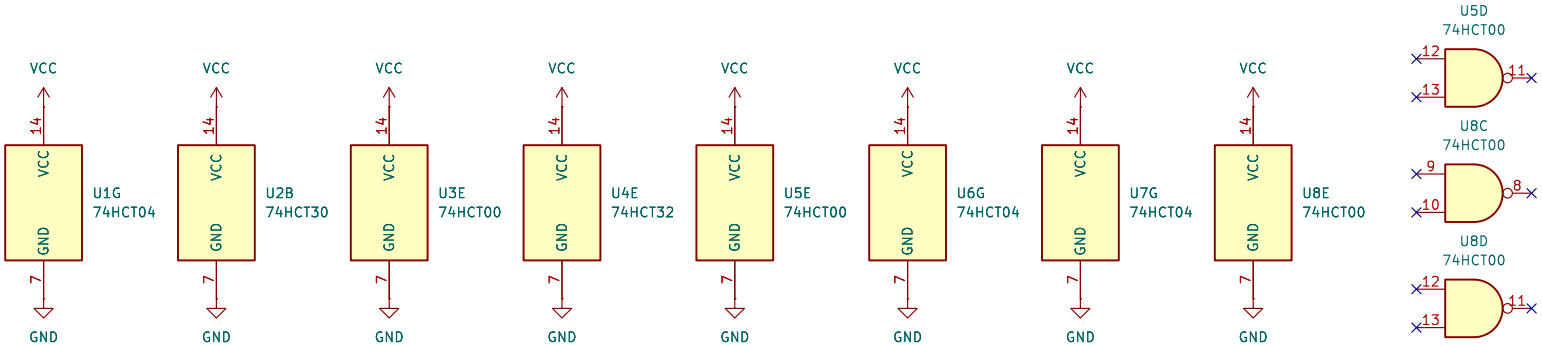

Author: Kevin Angstadt
St. Lawrence University

Sheet: /
File: 8088_breadboard_computer.kicad_sch

Title: 8088 Breadboard Computer

Size: A	Date: 2024-11-13	**Rev: A**
KiCad E.D.A. 8.0.6		Id: 1/5

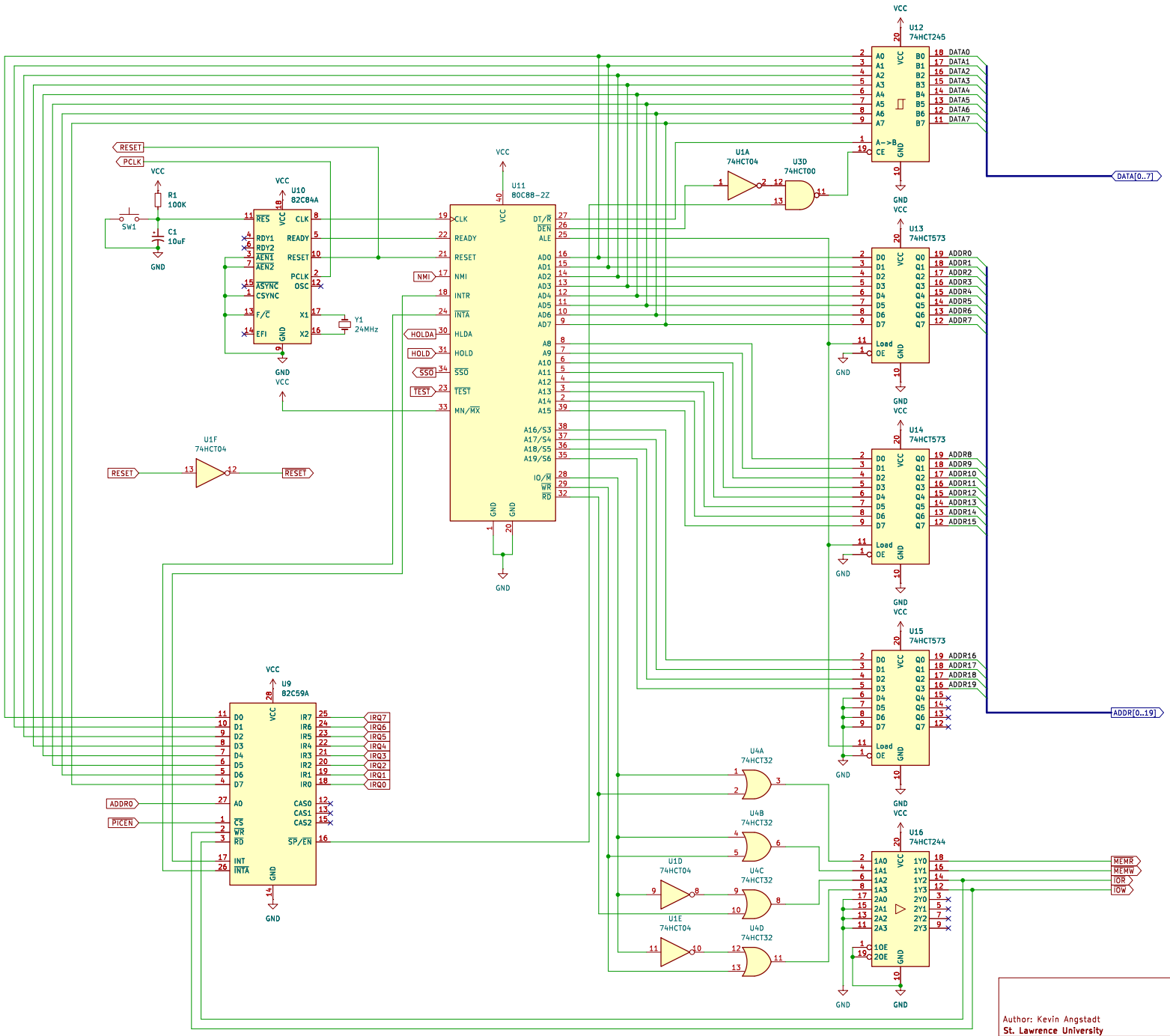

Author: Kevin Angstadt
St. Lawrence University
Sheet: /8088_processor/
File: 8088_processor.kicad_sch

Title: 8088 Breadboard Computer

Size: User	Date: 2024-11-13	Rev: A
KiCad E.D.A. 8.0.6		Id: 2/5

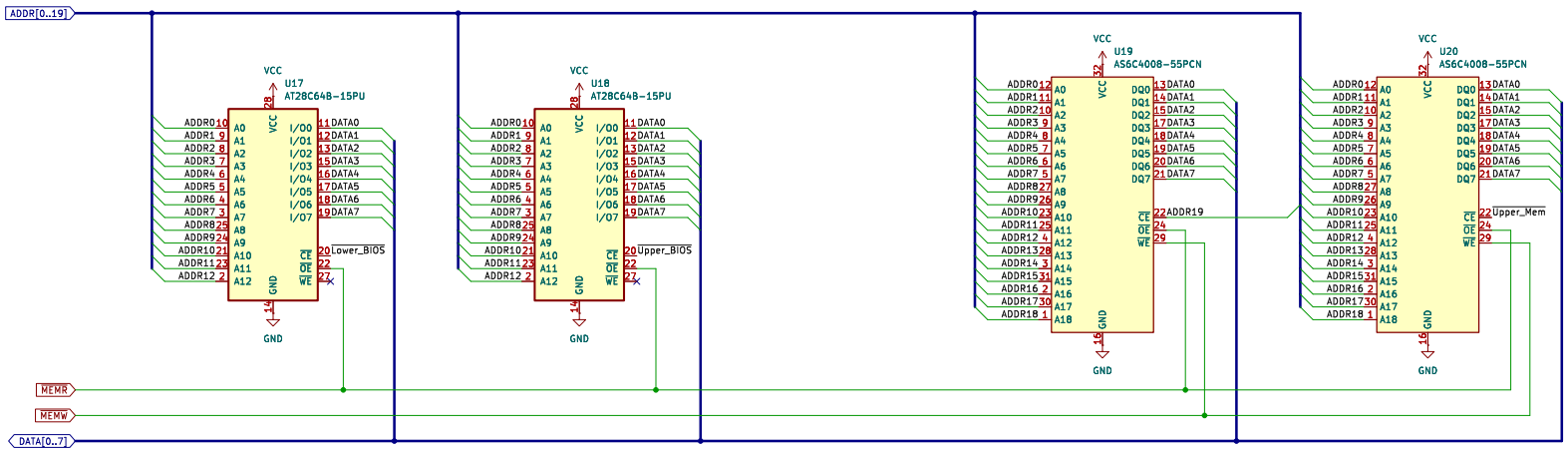

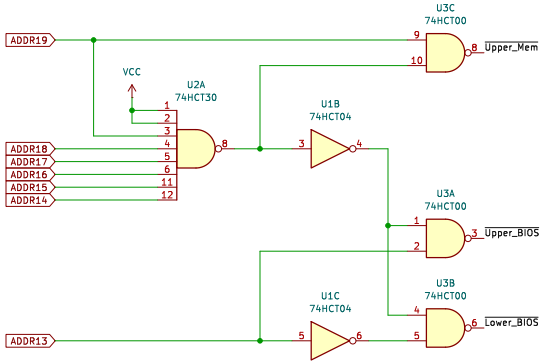

Author: Kevin Angstadt
St. Lawrence University

Sheet: /8088_memory/
File: 8088_memory.kicad_sch

Title: 8088 Breadboard Computer

Size: User	Date: 2024-11-13	Rev: A
KiCad E.D.A. 8.0.6		Id: 3/5

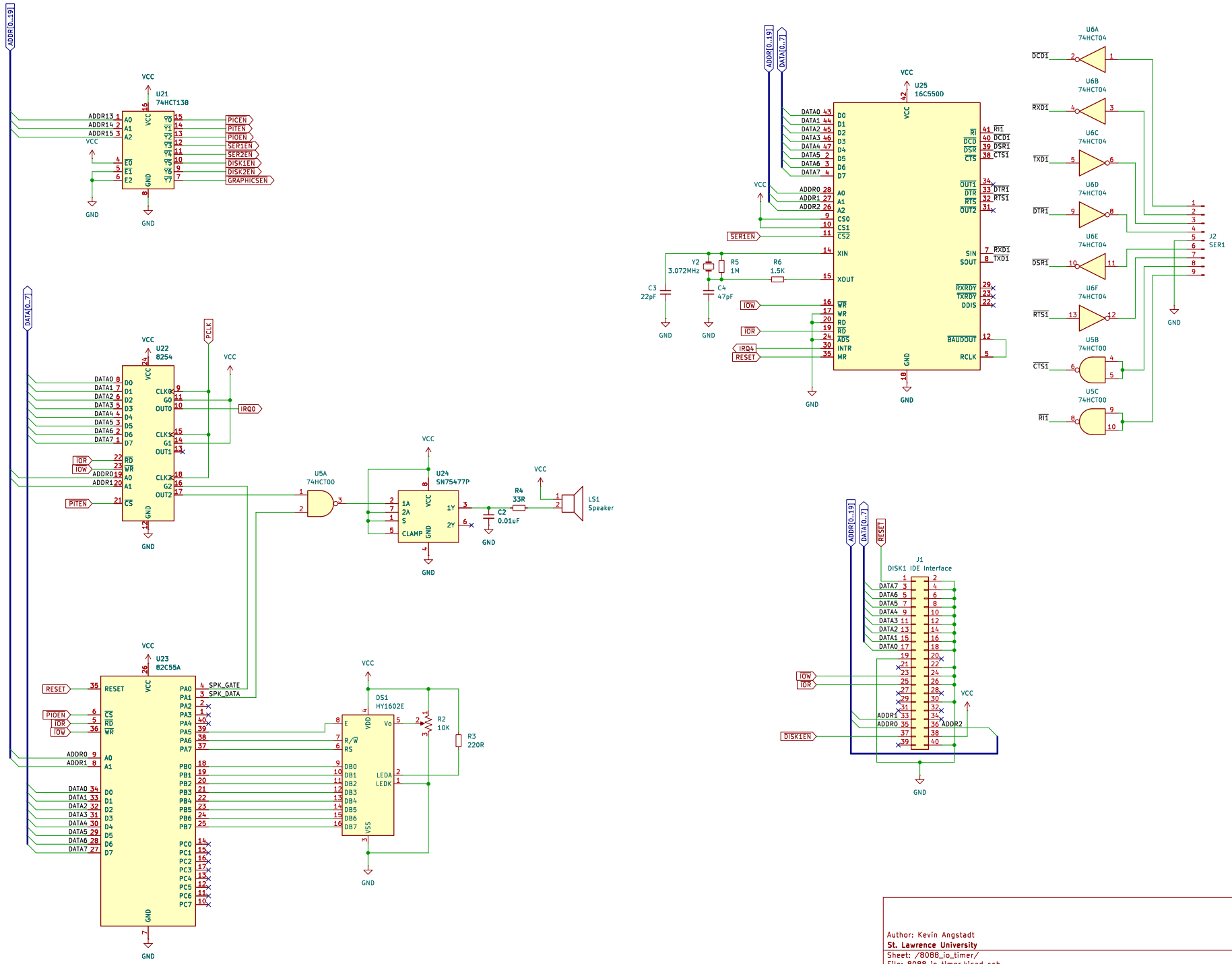

Author: Kevin Angstadt
St. Lawrence University
Sheet: /8088_io_timer/
File: 8088_io_timer.kicad_sch

Title: 8088 Breadboard Computer

Size: User	Date: 2024-11-13	**Rev: A**
KiCad E.D.A. 8.0.6		Id: 4/5

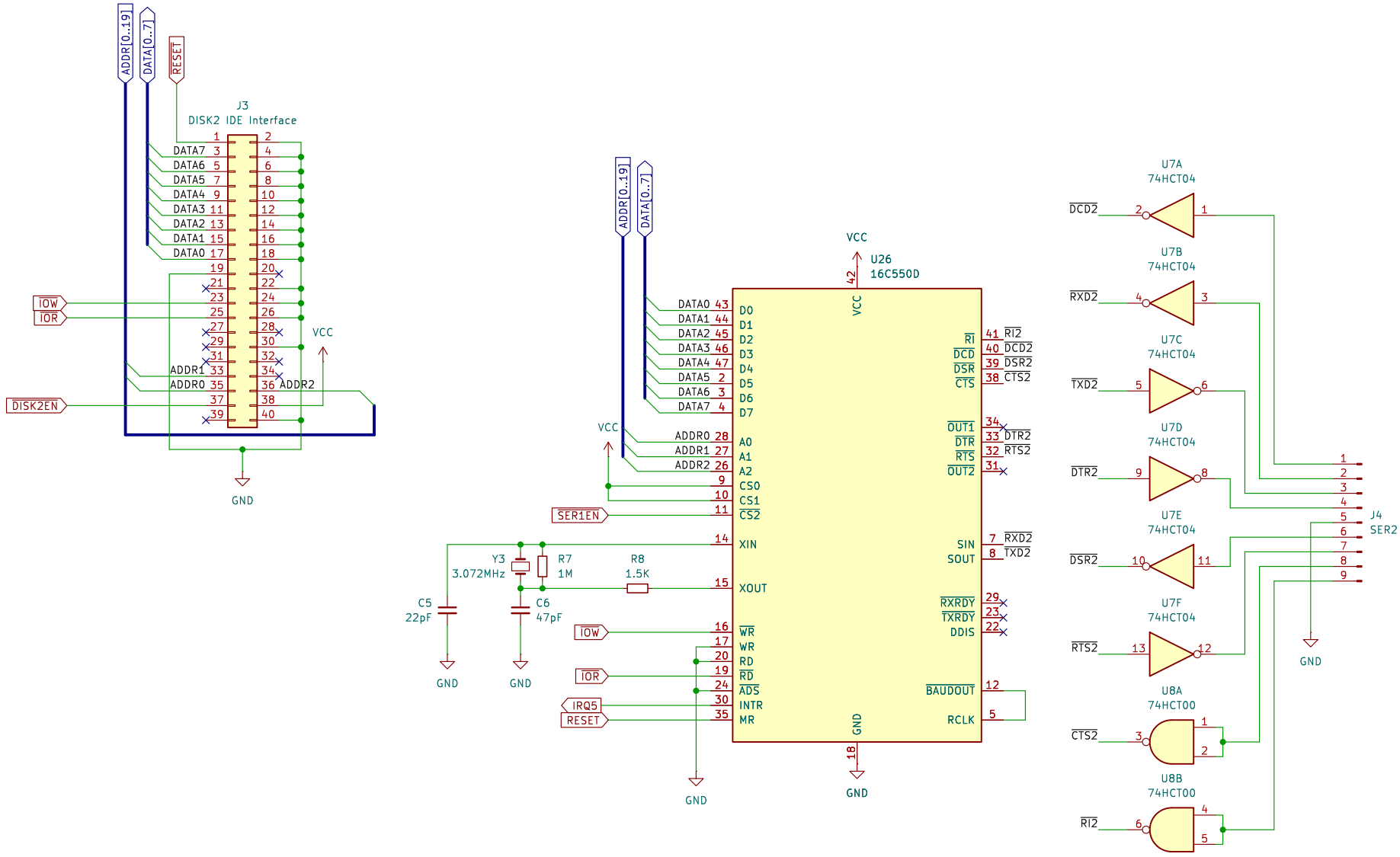

Author: Kevin Angstadt
St. Lawrence University
Sheet: /8088_aux_io/
File: 8088_aux_io.kicad_sch

Title: 8088 Breadboard Computer

Size: A	Date: 2024-11-13	**Rev: A**
KiCad E.D.A. 8.0.6		Id: 5/5