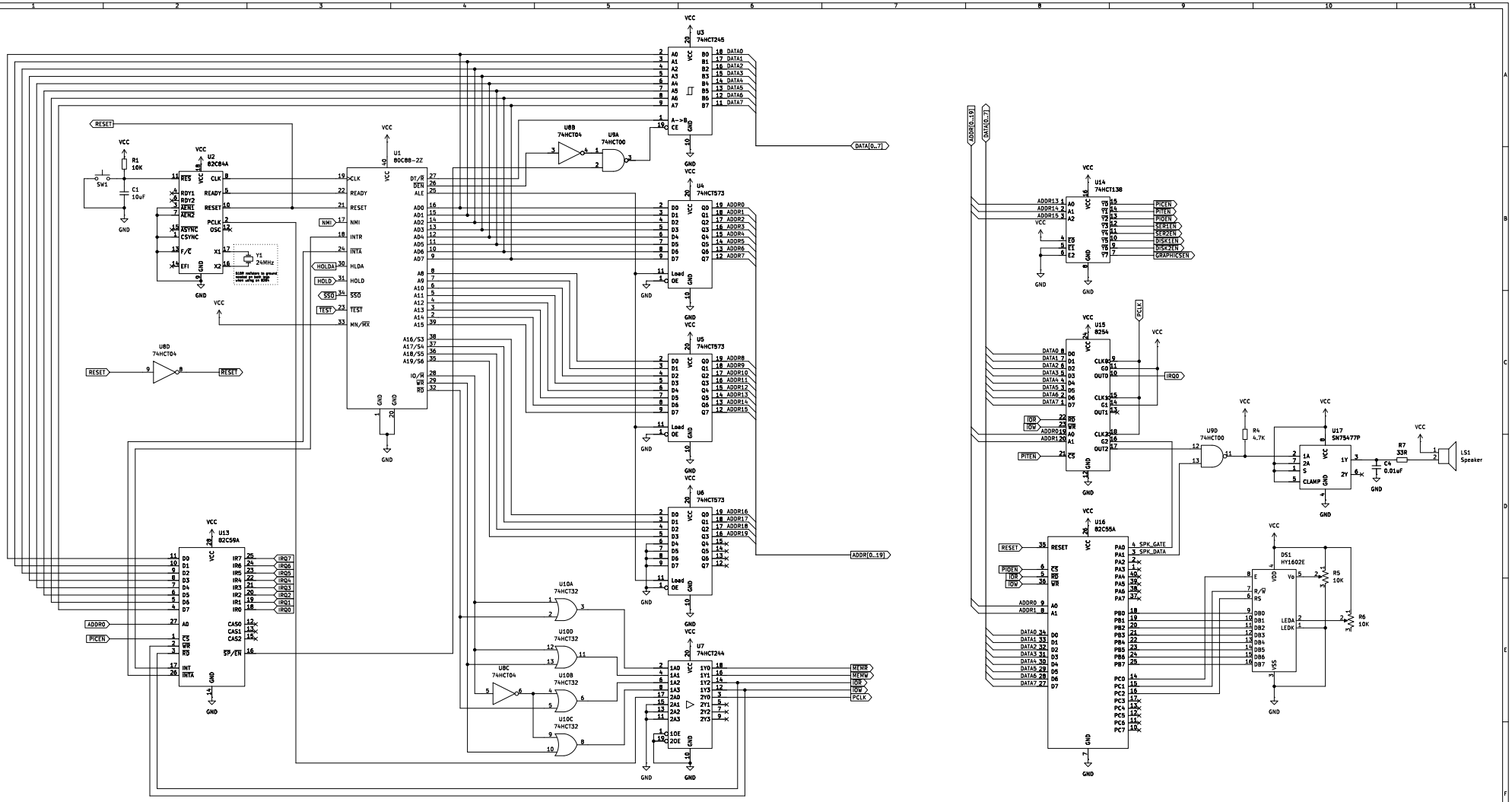

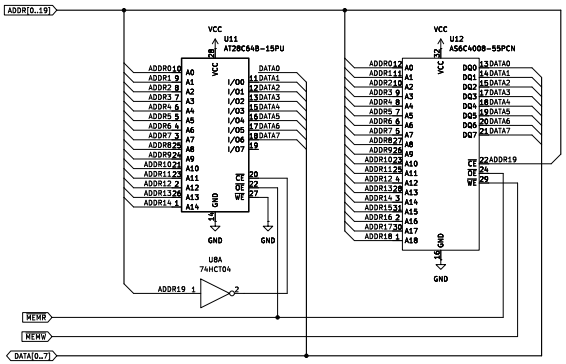

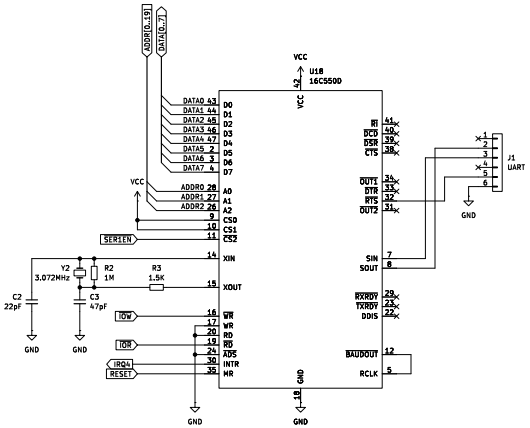

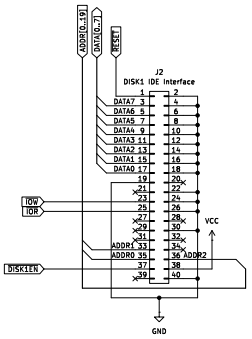

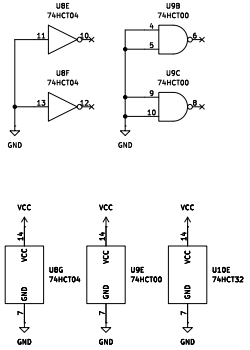

Author: Kevin Angstadt
St. Lawrence University

Sheet: /
File: ARC86-512.kicad_sch

Title: ARC86-512 Breadboard Computer

Size: C	Date: 2025-01-29	Rev: A
KiCad E.D.A. 8.0.8		Id: 1/1