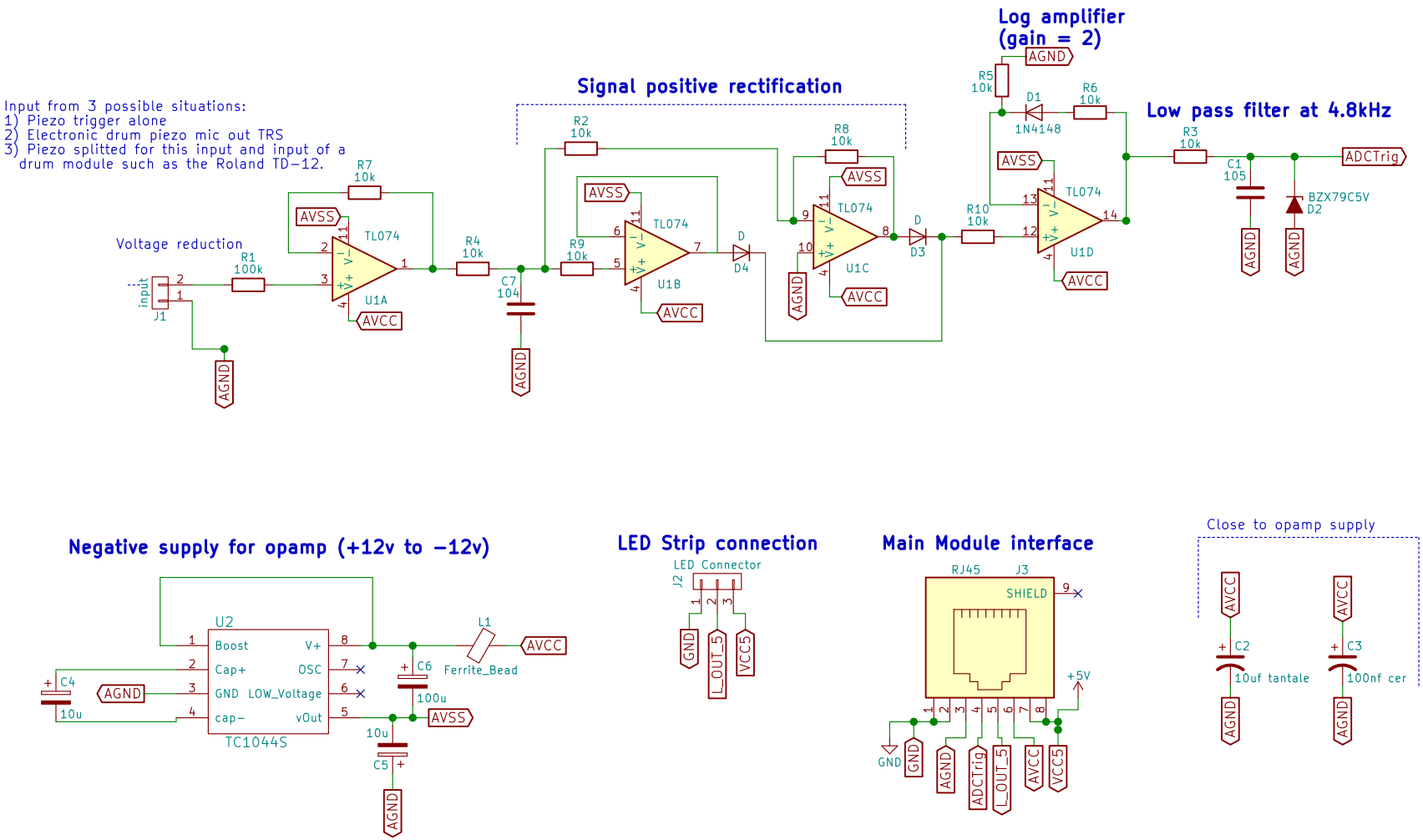

Litioo

Sheet: /

File: ec-dlm-tr04.sch

Title: LITDLM-TR05

Size: USLetter	Date: 2019-02-18	Rev: 8
KiCad E.D.A. kicad 4.0.6		Id: 1/1