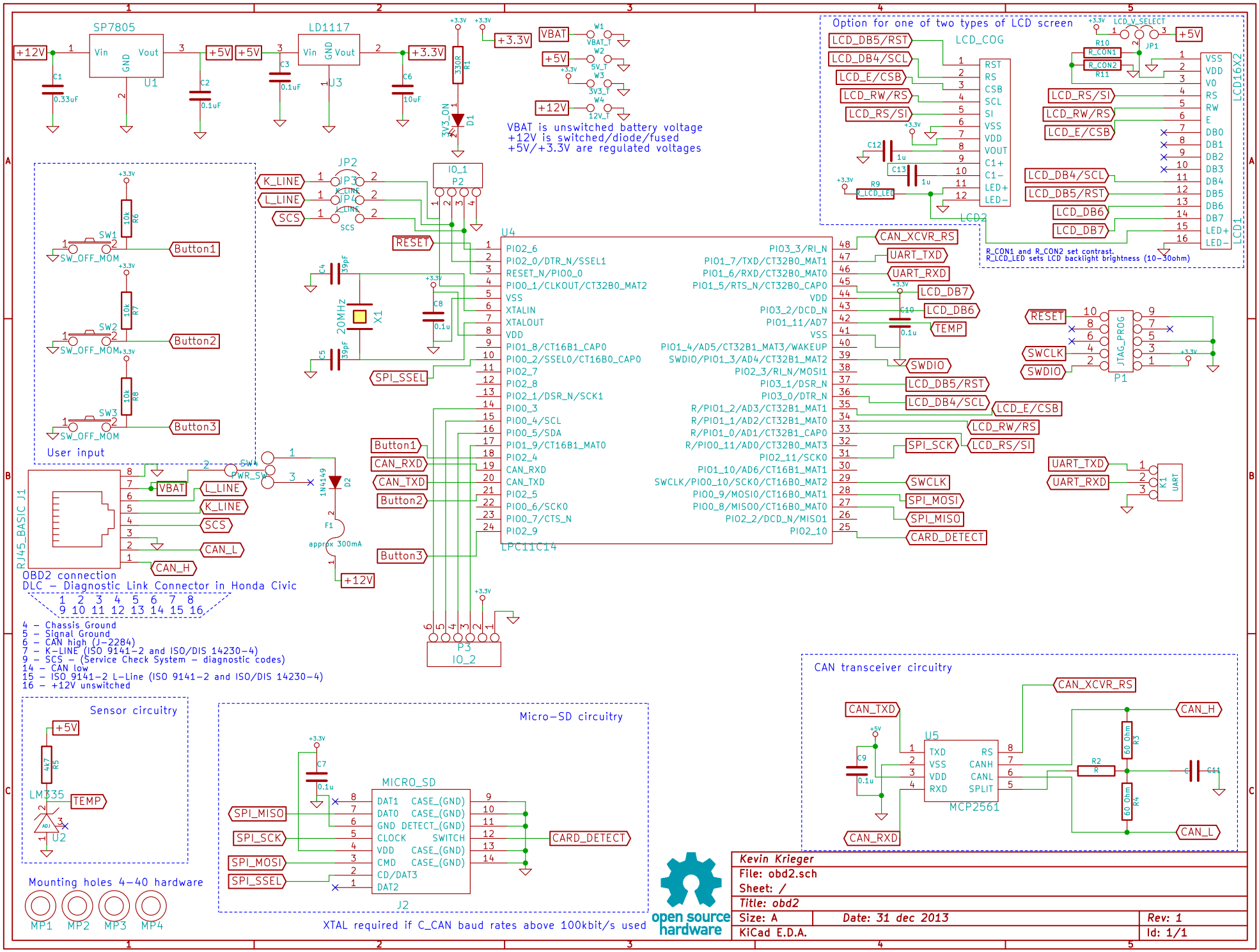
SP7805
U1
LD1117
U3
+12V
+5V
+3.3V
VBAT
VBAT is unswitched battery voltage
+12V is switched/diode/fused
+5V/+3.3V are regulated voltages
Option for one of two types of LCD screen
LCD_COG
LCD2
LCD16X2
LCD1
R_CON1 and R_CON2 set contrast.
R_LCD_LED sets LCD backlight brightness (10-30ohm)
User input
Button1
Button2
Button3
SW_OFF_MOM
JP2
JP3
JP4
K_LINE
L_LINE
SCS
RESET
U4
LPC11C14
20MHz
X1
SPI_SSEL
CAN_XCVR_RS
UART_TXD
UART_RXD
LCD_DB7
LCD_DB6
TEMP
SWDIO
LCD_DB5/RST
LCD_DB4/SCL
LCD_E/CSB
LCD_RW/RS
LCD_RS/SI
SPI_SCK
SWCLK
SPI_MOSI
SPI_MISO
CARD_DETECT
JTAG_PROG
P1
K1
UART
RJ45_BASIC J1
VBAT
L_LINE
K_LINE
SCS
CAN_L
CAN_H
PWR_SW
1N4149
F1
approx 300mA
OBD2 connection
DLC – Diagnostic Link Connector in Honda Civic
1 2 3 4 5 6 7 8
9 10 11 12 13 14 15 16
4 – Chassis Ground
5 – Signal Ground
6 – CAN high (J-2284)
7 – K-LINE (ISO 9141-2 and ISO/DIS 14230-4)
9 – SCS – (Service Check System – diagnostic codes)
14 – CAN low
15 – ISO 9141-2 L-Line (ISO 9141-2 and ISO/DIS 14230-4)
16 – +12V unswitched
Sensor circuitry
LM335
U2
Micro-SD circuitry
MICRO_SD
J2
CARD_DETECT
XTAL required if C_CAN baud rates above 100kbit/s used
CAN transceiver circuitry
U5
MCP2561
CAN_TXD
CAN_RXD
CAN_XCVR_RS
CAN_H
CAN_L
Mounting holes 4-40 hardware
MP1
MP2
MP3
MP4
open source hardware
Kevin Krieger
File: obd2.sch
Sheet: /
Title: obd2
Size: A
Date: 31 dec 2013
Rev: 1
KiCad E.D.A.
Id: 1/1