Chapter 12 Discussion
Rigid Body Rotation

Name: Kevin Lee

1. Is the center of mass of this dumbbell at point 1, 2, or 3? Explain.

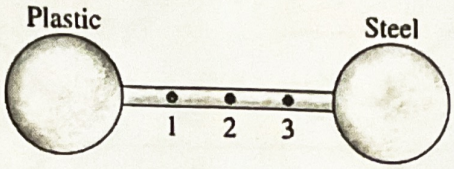

3, because center of mass is $x_{cm} = \frac{m_A x_A + m_B x_B}{m_A + m_B} = \frac{m_A x_A + m_B x_B}{M}$

Since steel has larger mass center of mass will be closer to steel

2. Mark the center of mass of this uniform object with an X.

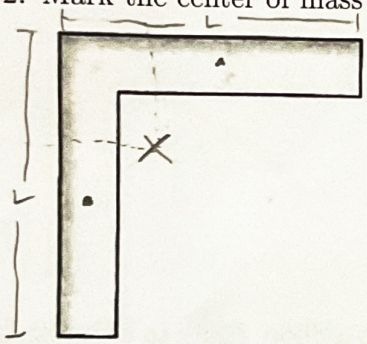

$$X = \frac{m_1 x_1 + m_2 x_2}{m_1 + m_2}$$

$$\frac{m\frac{L}{2} + m(0)}{2m} = \frac{L}{4}$$

Y is also same, $\frac{L}{4}$

3. The figure shows four equal-mass bars rotating about their center with lengths and angular speeds shown. Rank in order, from largest to smallest, their:

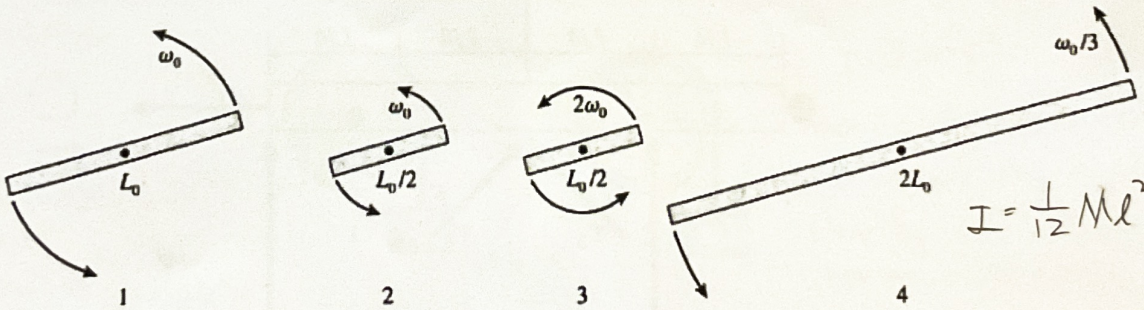

$I = \frac{1}{12} M l^2$

$I = \frac{M}{12} l^2$

(a) moments of inertia I_1 to I_4.

$I_1 = \frac{1}{12} M L_0^2$, $I_2 = \frac{1}{12} M L_0^2/4$ $I_3 = \frac{1}{12} M L_0^2/4$ $I_4 = \frac{1}{12} M 4L_0^2$ $I_4 > I_1 > I_2 = I_3$

$K = \frac{1}{2} I \omega^2$

(b) kinetic energies K_1 to K_4.

$K_1 = \frac{1}{2}(\frac{1}{12} M)\omega_0^2$, $K_2 = \frac{1}{2}(\frac{1}{48} M)\omega_0^2$, $K_3 = \frac{1}{2}(\frac{1}{48} M)4\omega_0^2$, $K_4 = \frac{1}{2}(\frac{1}{3} M)\frac{\omega_0^2}{9}$ $K_1 = K_3 > K_4 > K_2$

24 96 54

(c) angular momenta L_1 to L_4.

$L = I \cdot \omega$

$L_1 = (\frac{1}{12} M)\omega_0$, $L_2 = (\frac{1}{48} M)\omega_0$, $L_3 = (\frac{1}{48} M)2\omega_0$, $L_4 = (\frac{1}{3} M)\frac{\omega_0}{3}$

12 8 24 9

$L_4 > L_1 > L_3 > L_2$

4. Five forces are applied to a door. For each, determine if the torque about the hinge is positive (+), negative (−), or zero (0).

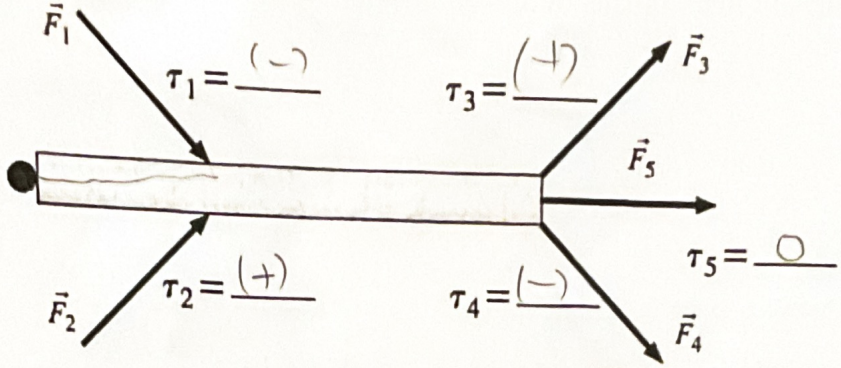

5. Six forces, each of magnitude either F or $2F$, are applied to a door. Rank in order, from largest to smallest, the six torques τ_1 to τ_6 about the hinge.

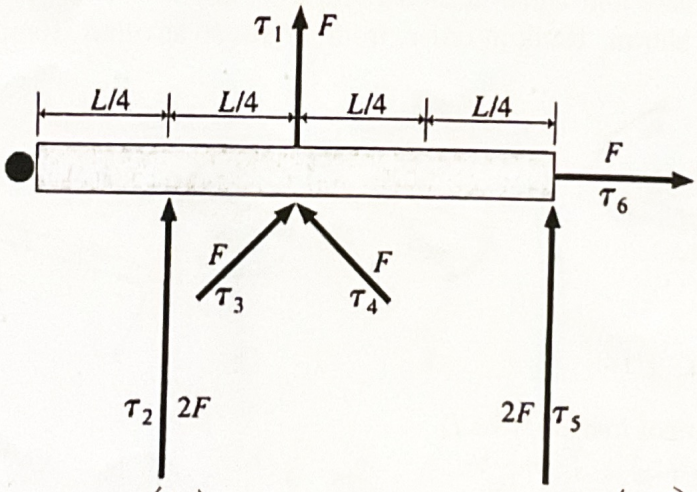

$T = RF\sin\theta$

$T_1 = \left(\frac{L}{2}\right)F \sin 90^\circ = \frac{LF}{2}$

$T_2 = \left(\frac{L}{4}\right)2F \sin 90^\circ = \frac{LF}{2}$

$T_3 = \left(\frac{L}{2}\right)F \sin 45^\circ$

$T_4 = \frac{L}{2}F \sin 45^\circ$

$T_5 = L(2F)\sin 90^\circ = 2LF$

$T_6 = L(F)\sin 180^\circ = 0$

$T_5 > T_1 = T_2 > T_3 = T_4 > T_6$

6. Three forces act on the 2.0 m long uniform beam shown.

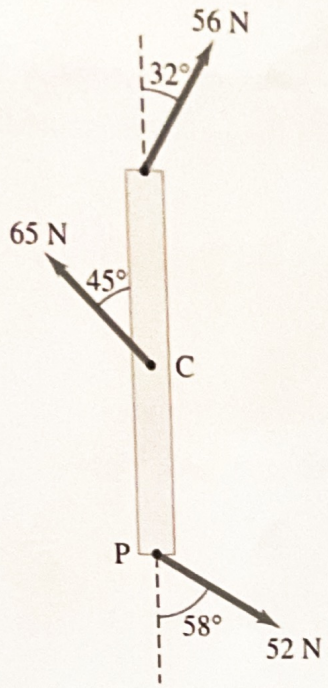

(a) Calculate the net torque about point C (the CM).

$\Sigma \tau_z = (1.0)(52N)\sin 58° + 0 - (1.0)(56N)\sin 32°$

$= 44.1 + 0 - 29.7$

$= 14.4$

(b) Calculate the net torque about point P at one end.

$\Sigma \tau_z = 0 + (1.0)(65N)\sin 45° - (2.0)(56N)\sin 32°$

$= 45.962 - 59.351$

$= -13.4$

7. A solid cylinder and a cylindrical shell have the same mass, same radius, and turn on frictionless, horizontal axes (ignore the lightweight spokes holding up the shell). A rope is wrapped around each cylinder and tied to a block. The blocks have the same mass and are held the same height above the ground. Both blocks are released simultaneously, and the ropes do not slip. Which block hits the ground first?

Before | After

$v' = R\omega$

$K = 0$ | $K = \frac{1}{2}mv^2 + \frac{1}{2}I\omega^2$

$U = mgh$ = | $U = 0$

$mgh = \frac{1}{2}mv'^2 + \frac{1}{2}I\omega^2 \Leftarrow \begin{cases} v' = R\omega \\ I = \beta MR^2 \end{cases}$

$v'^2 = 2gh\left(\frac{m}{\beta M + m}\right)$

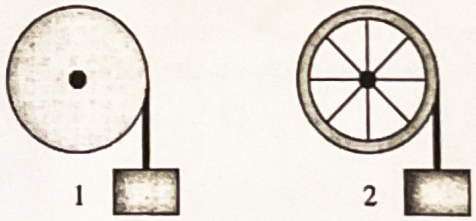

$I = \Sigma m_i R_i^2$

moment of Inertia is not only depends on mass but also where the masses are focused how much the masses spread out.

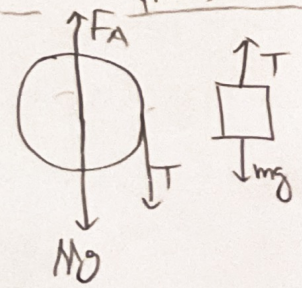

$\Sigma F_y = T - mg = -ma$

$T - mg = -ma$

$RT = I\alpha$

$\boxed{a = R\alpha}$

$\boxed{I = \beta MR^2}$

$\frac{I}{R}\left(\frac{a}{R}\right) - mg = -ma$

$\boxed{\therefore a = \frac{mg}{m + I/R^2}}$

$\therefore$ 1 will have small moment of Inertia

1 will hits the ground first

$\Sigma F_y = F_A - Mg - T = 0$

$\Sigma \tau = 0 - R(T)\sin 90° = -I\alpha$

(pivot on the center)

8. An Atwood machine consists of two masses, $m_A = 65$ kg and $m_B = 75$ kg, connected by a massless inelastic cord that passes over a pulley free to rotate. The pulley is a solid cylinder of radius $R = 0.45$ m and mass 6.0 kg.
   (a) Determine the acceleration of each mass. (*Hint:* the tensions are not equal.)
   (b) What % error would be made if the moment of inertia of the pulley is ignored?

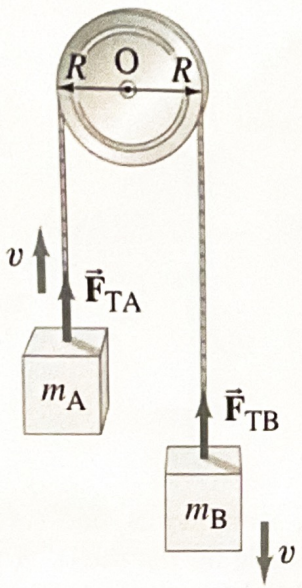

$F_{TA} - m_A g = m_A a$, $F_{TA} = m_A g + m_A a$

$F_{TB} - m_B g = -m_B a$ $\quad F_{TB} = m_B g - m_B a$

$-F_{TA} \cdot R\sin 90^\circ + F_{TB} \cdot R\sin 90^\circ = +I\alpha$

$\alpha = \frac{a}{R}$

$R(-F_{TA} + F_{TB}) = I\alpha$

$a\left(\frac{I}{R^2}\right) = (m_B - m_A)g - (m_A + m_B)a$

$a = \frac{(m_B - m_A)g}{m_A + m_B\left(\frac{M}{2}\right)}$ $\quad .65 \quad \frac{(10)\,9.8}{140 \times 3} = 0.2333\ldots$

9. A metal bar of mass m and length ℓ can rotate in a horizontal plane about a vertical, frictionles axle through its center. A hollow channel down the bar allows compressed air (fed in at the axle) to spray out of two small holes at the ends of the bar, as shown. The bar is found to speed up to angular velocity ω in time Δt, starting from rest. What force does each escaping jet of air exert on the bar?

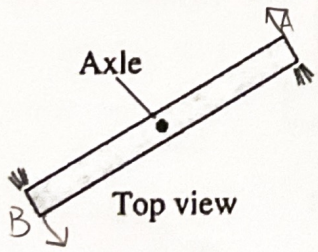

$\tau_A = F\left(\frac{L}{2}\right)$

$\tau_B = F\left(\frac{L}{2}\right)$

$\Sigma \tau_{net} = FL$

$I = \frac{1}{12}ML^2$

$\boxed{\therefore F = \frac{ML\omega}{12(\Delta t)}}$

$\omega = \omega_0 + \alpha(\Delta t)$

$\omega = 0 + \left(\frac{12F}{ML}\right)\Delta t$

$FL = I\alpha$

$FL = \left(\frac{ML^2}{12}\right)\alpha$

$\boxed{\alpha = \frac{12F}{ML}}$

10. A bullet of mass m moving with velocity v strikes and becomes embedded at the edge of a cylinder of mass M and radius R_0. The cylinder, initially at rest, begins to rotate about its symmetry axis, which remains fixed in position.

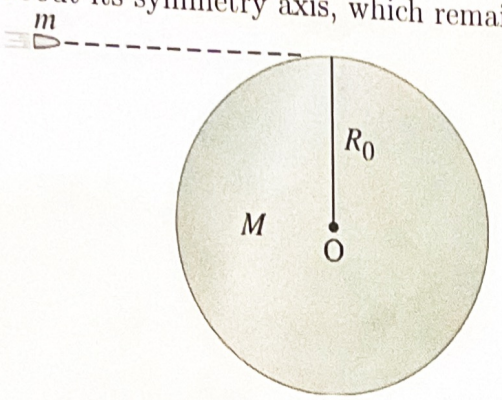

(a) Assuming no frictional torque, what is the angular velocity of the cylinder after this collision?

cyclinder $I = \frac{1}{2}MR_0^2$

KE of bullet $= \frac{1}{2}mv^2$

$I' = \frac{1}{2}MR_0^2 + mR_0^2$

angular momentum

$L_0 = L_f$

$I_m W_m + \cancel{I_M W_M}^{0} = (I_m + I_M) W_{m+M}$

$mR_0^2\left(\frac{v}{R_0}\right) = \left(mR_0^2 + \frac{1}{2}mR_0^2\right)(W)$

$$\boxed{W = \frac{mv}{\left(\frac{1}{2}M + m\right)R_0}}$$

(b) Is kinetic energy conserved?

$\therefore$ Kinetic energy does not conserved. when it is inelastic collison