DRAWING NUMBER LNRC

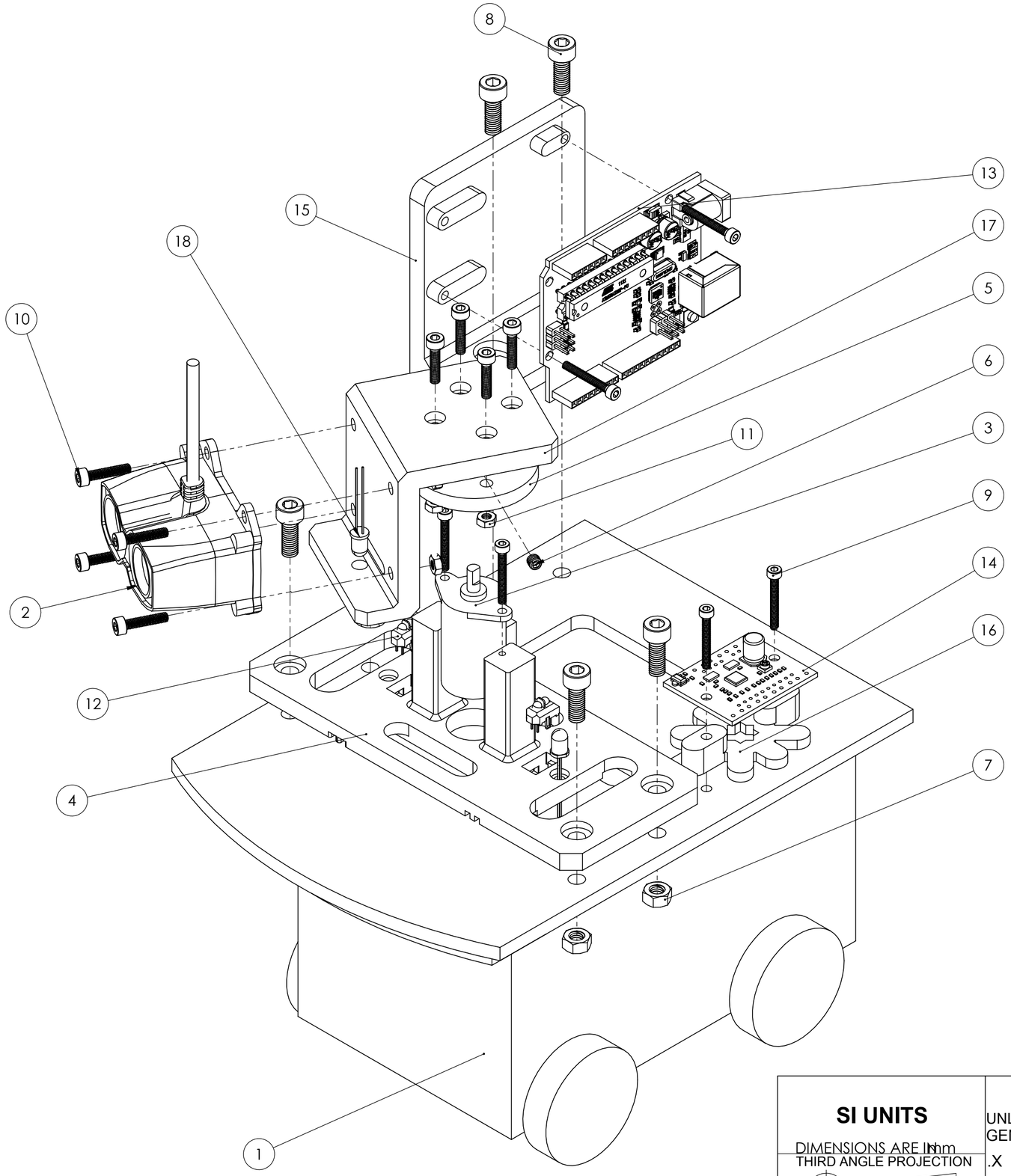

ITEM NO.	PART NUMBER	DESCRIPTION	Final/QTY.
1	Mechbot Basic	APPROXIMATION	1
2	ID_Lidar-Lite-V3HP	LIDAR	1
3	NMB PG20L-D20-HHC0	MOTOR	1
4	Mechbot_Mount_NMB	TO BE 3D PRINTED	1
5	NMB Motor Shaft Adapter	TO BE EITHER 3D PRINTED OR MACHINED	1
6	91390A110	MCMASTER CARR M4 x 0.7 mm x 4mm SET SCREW	1
7	90591A260	MCMASTER CARR M5 HEX NUT	6
8	91290A230	MCMASTER CARR M5 x 0.8 mm x 14 mm SOCKET HEAD SCREW	6
9	91290A108	MCMASTER CARR M2.5 x 0.45 mm X 20 mm SOCKET HEAD SCREW	6
10	91290A119	MCMASTER CARR M3 x 0.5 mm x 14 mm SOCKET HEAD SCREW	8
11	90591A250	MCMASTER CARR M3 HEX NUT	8
12	TCRT5000L	REFLECTIVE SENSOR	2
13	arduino uno		1
14	Big Easy Driver stp		1
15	Arduino Bracket	TO BE 3D PRINTED	1
16	BED Bracket	TO BE 3D PRINTED	1
17	L-Bracket V4	TO BE 3D PRINTED	1
18	LED 5mm white		2

NOTE:
1. DEBURR AND BREAK SHARP EDGES
2. CLEAN ANY IMPURITIES AND MACHINE OILS
3. ALL MATERIALS AND FINISHES MUST BE RoHS COMPLIANT
4. UNLESS SPECIFIED, FILLET RADII ARE NON-CRITICAL - ASSUME SMALL
5. ALL ENGRAVING/ETCHING FONT, DEPTH, AND LOCATION NON-CRITICAL
6. 3-D PRINT SUPPORTS ARE TO BE REMOVED

SI UNITS

DIMENSIONS ARE IN mm
THIRD ANGLE PROJECTION

THIS DOCUMENT IS THE PROPERTY OF RYERSON UNIVERSITY. ITS USE IS AUTHORISED FOR RESPONDING TO A REQUEST FOR QUOTATION OR FOR THE PERFORMANCE OF WORK FOR RYERSON UNIVERSITY.

TOLERANCES
UNLESS OTHERWISE NOTED
GENERAL LINEAR
.X ±.XX ±.XXX ±
GENERAL ANGULAR ± °
GENERAL RADIAL ±

MATERIAL
SURFACE FINISH

APPROVALS

DESIGNER	KL	DATE	3/29/19
CHECKER		DATE	
APPROVER		DATE	
MECHANICAL		DATE	
ELECTRICAL		DATE	

Ryerson University
350 VICTORIA ST.
TORONTO, ONTARIO
CANADA M5B 2K3

TITLE
LIDAR NAVIGATED ROBOT CAR

SIZE	DRAWING NUMBER	REVISION NUMBER
A2	LNRC	3
SCALE 1:1	MASS	SHEET 1 OF 1