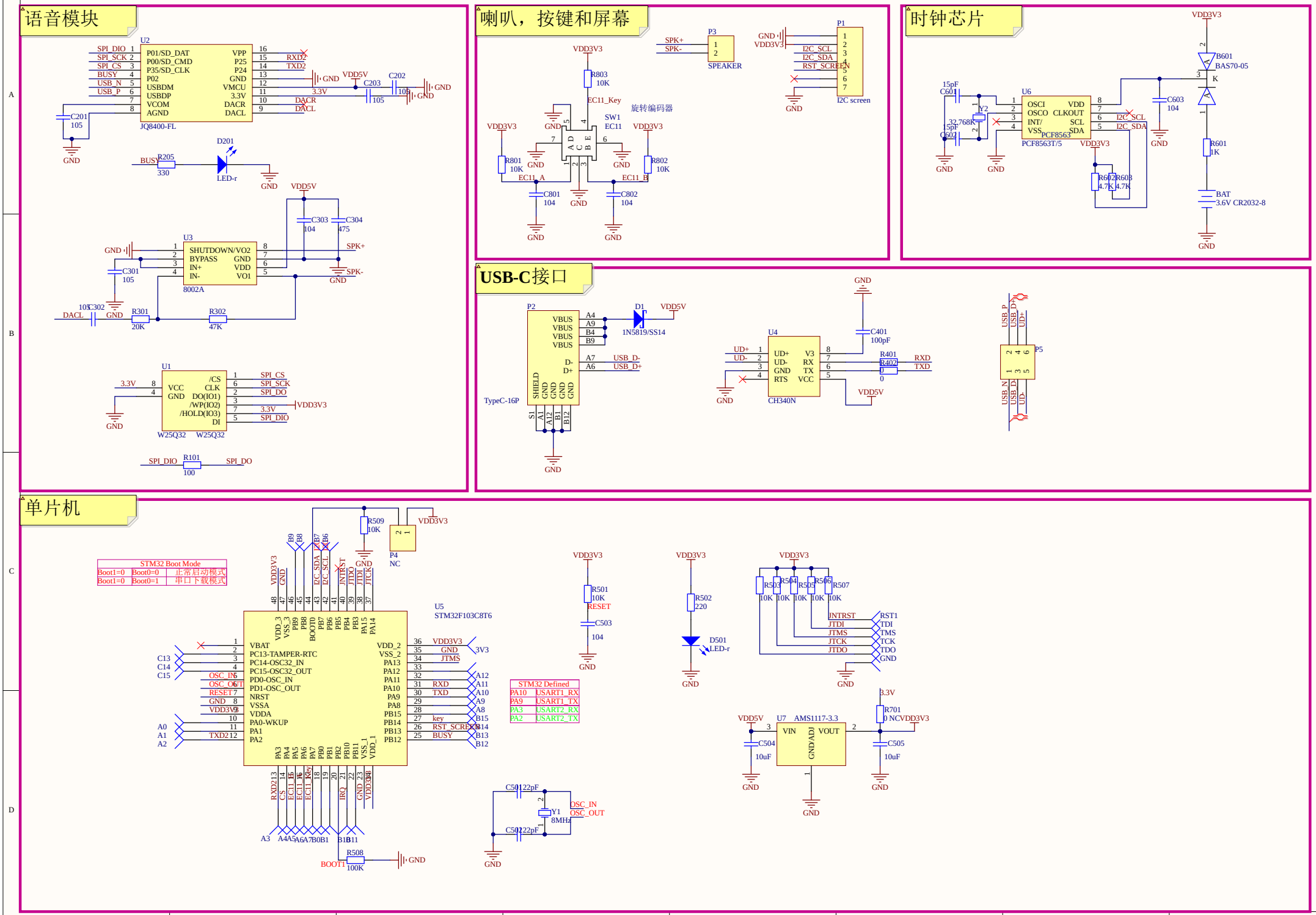
语音模块
U2
JQ8400-FL
SPI_DIO
SPI_SCK
SPI_CS
BUSY
USB_N
USB_P
P01/SD_DAT
P00/SD_CMD
P35/SD_CLK
P02
USBDM
USBDP
VCOM
AGND
VPP
P25
P24
GND
VMCU
3.3V
DACR
DACL
RXD2
TXD2
VDD5V
C202
C203
C201
105
D201
LED-r
R205
330
U3
8002A
SHUTDOWN/VO2
BYPASS
IN+
IN-
VO1
SPK+
SPK-
C301
C302
R301
20K
R302
47K
U1
W25Q32
/CS
CLK
DO(IO1)
/WP(IO2)
/HOLD(IO3)
DI
VCC
VDD3V3
R101
100
喇叭，按键和屏幕
P3
SPEAKER
P1
I2C screen
I2C_SCL
I2C_SDA
RST_SCREEN
R803
10K
EC11_Key
旋转编码器
SW1
EC11
R801
R802
EC11_A
EC11_B
C801
C802
时钟芯片
U6
PCF8563T/5
OSCI
OSCO
INT/
VSS
VDD
CLKOUT
SCL
SDA
Y2
32.768K
C601
C602
C603
B601
BAS70-05
R601
1K
BAT
3.6V CR2032-8
R602
R603
4.7K
USB-C接口
P2
TypeC-16P
VBUS
SHIELD
D-
D+
USB_D-
USB_D+
D1
1N5819/SS14
U4
CH340N
UD+
UD-
V3
RX
TX
VCC
RTS
C401
100pF
R401
R402
RXD
TXD
P5
单片机
U5
STM32F103C8T6
STM32 Boot Mode
Boot1=0 Boot0=0 正常启动模式
Boot1=0 Boot0=1 串口下载模式
R509
10K
P4
NC
VBAT
PC13-TAMPER-RTC
PC14-OSC32_IN
PC15-OSC32_OUT
PD0-OSC_IN
PD1-OSC_OUT
NRST
VSSA
VDDA
PA0-WKUP
PA1
PA2
VDD_2
VSS_2
PA13
PA12
PA11
PA10
PA9
PA8
PB15
PB14
PB13
PB12
JTMS
RXD
TXD
key
RST_SCREEN
BUSY
OSC_IN
OSC_OUT
RESET
TXD2
RXD2
BOOT1
R508
100K
STM32 Defined
PA10 USART1_RX
PA9 USART1_TX
PA3 USART2_RX
PA2 USART2_TX
R501
10K
C503
104
R502
220
D501
LED-r
R503
R504
R505
R506
R507
JTDI
JTMS
JTCK
JTDO
JNTRST
RST1
TDI
TCK
TDO
C501
22pF
Y1
8MHz
U7
AMS1117-3.3
VIN
VOUT
GND/ADJ
C504
C505
10uF
R701
0 NC
3.3V
GND

Board Stack Report