ScanCtrl v04

by C. Meyer 01/2026

Versions:

01 - initial prototype

02 - changed ports for SR Scan (Pedal, 4014)
added pullups for SR61 Scan

03 - added MPX connector
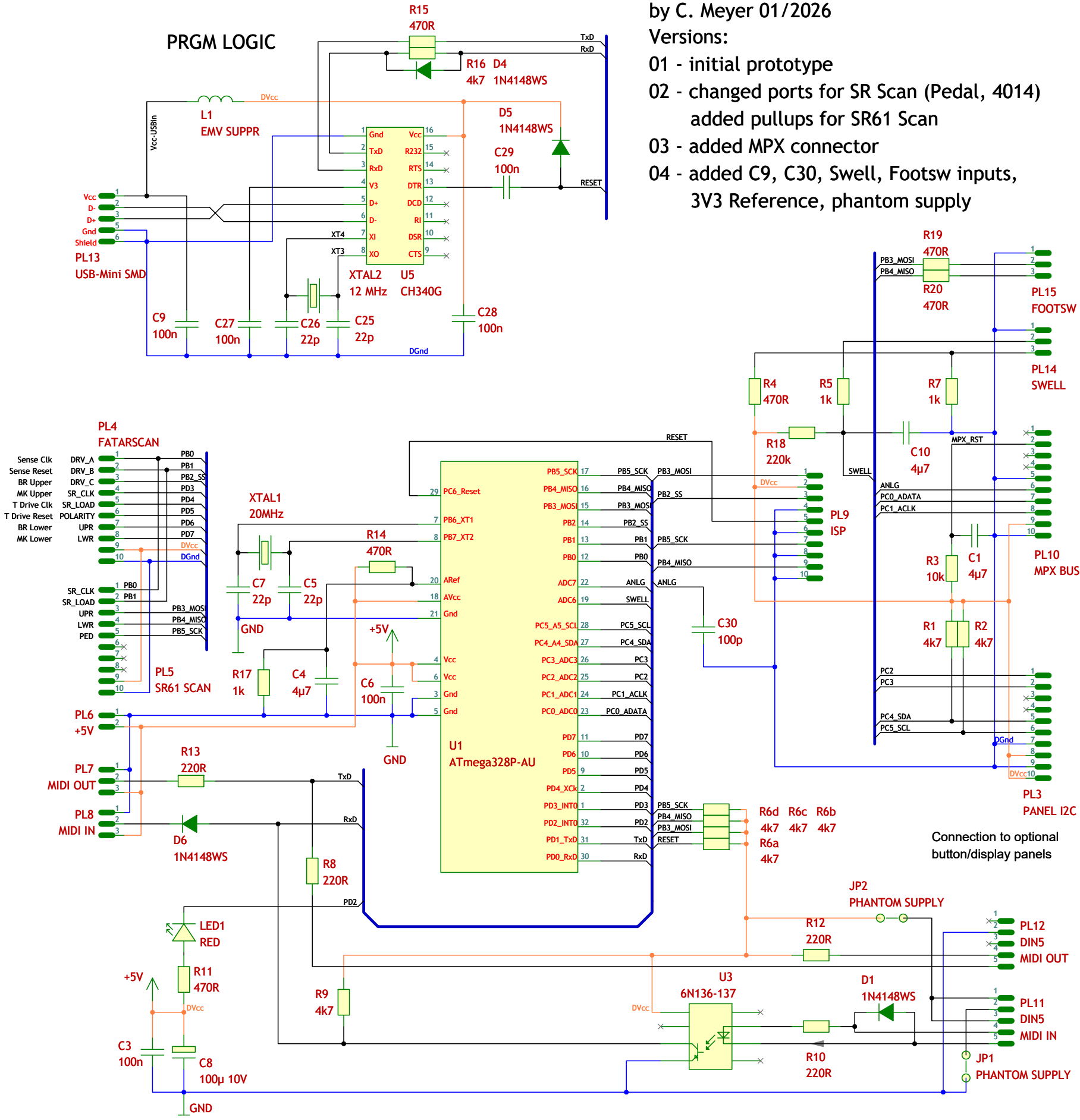
04 - added C9, C30, Swell, Footsw inputs,
3V3 Reference, phantom supply