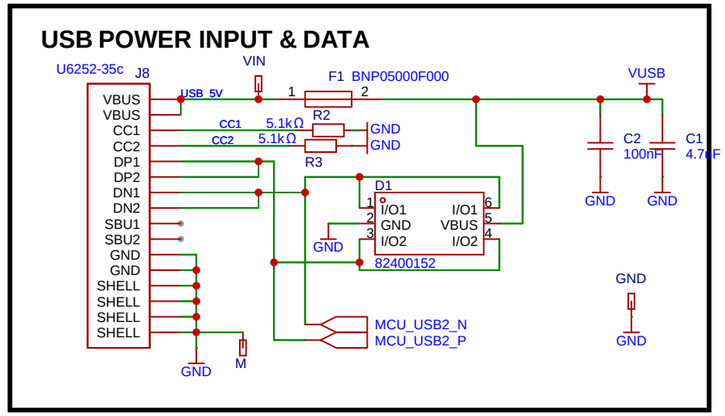

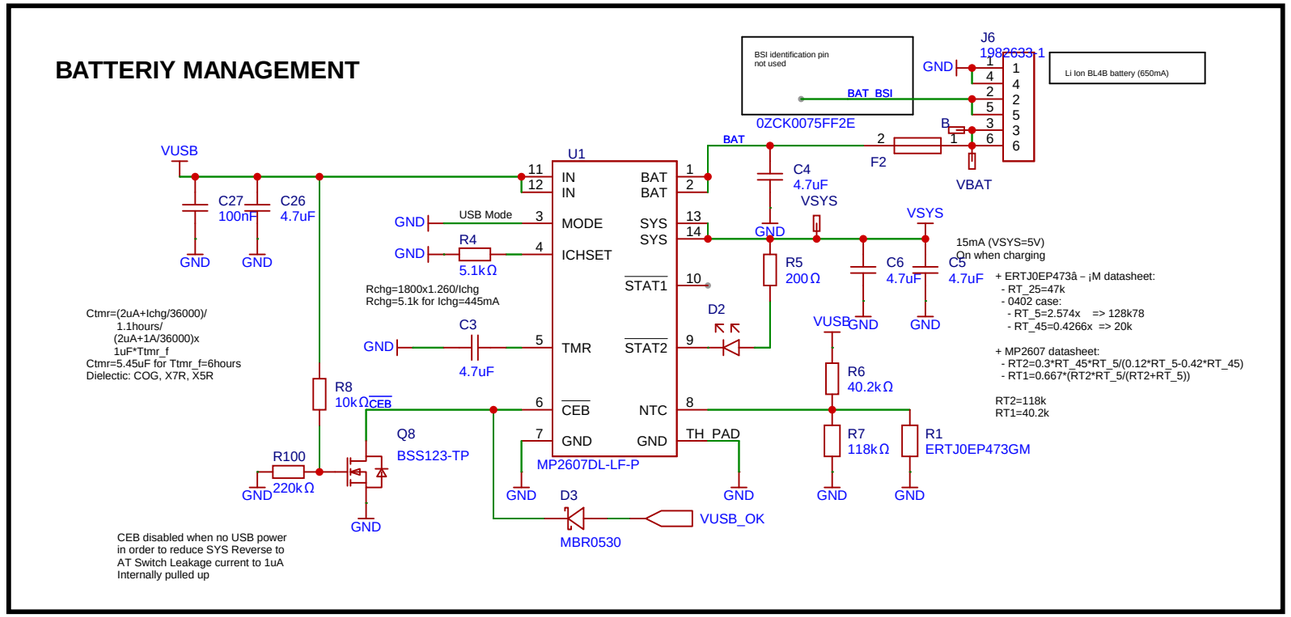

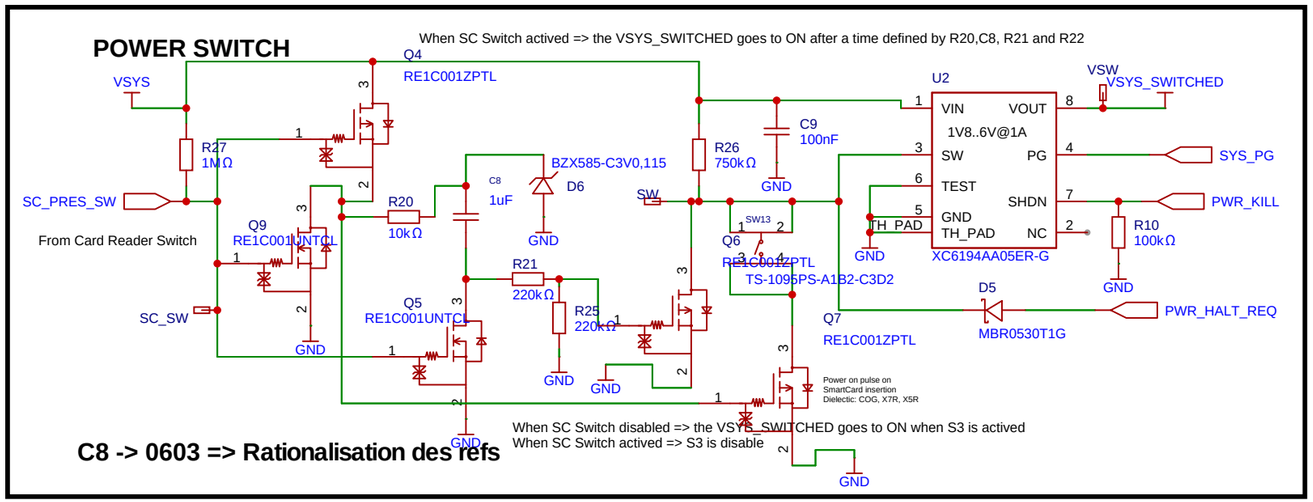

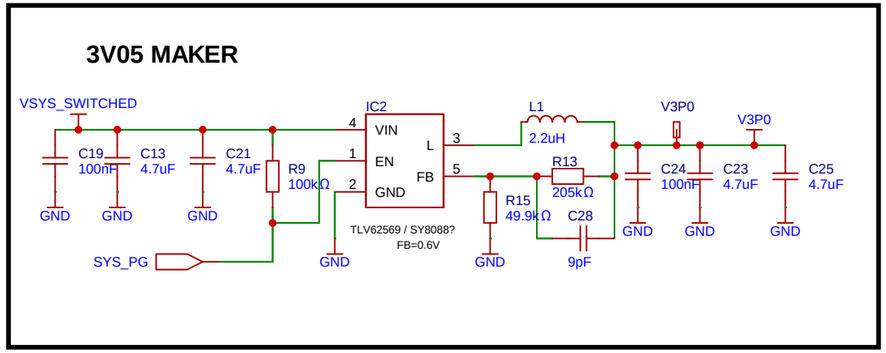

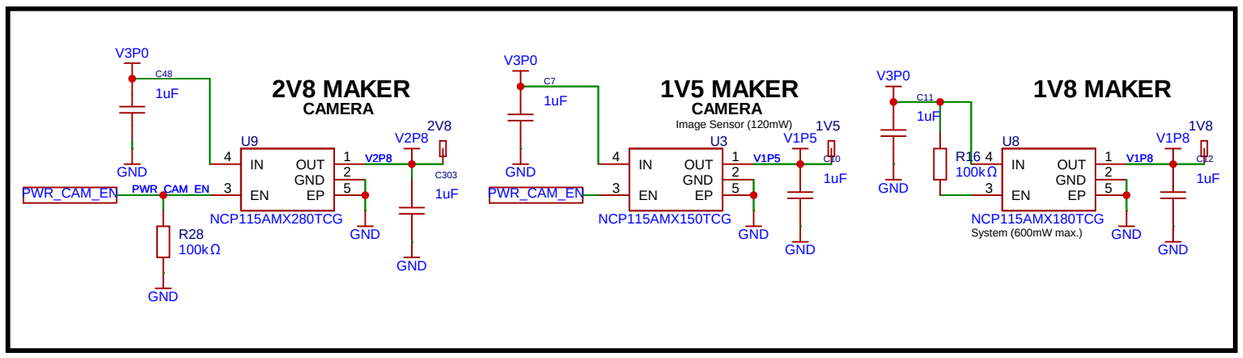

01 POWER

02 MCU MANAGEMENT

03 PERIPHERALS

04

05

07

Project Title: ProjectTitle	
STATUS KPRO	Folio Title: *
KPRO Reader	Project Number: ProjectNumberSC-1 / Board: ProjectBoardName
	Revision: ProjectSCHRev / Date: SchemaDate
	Drawn by: ProjectAutor / Folio: 1 /ProjectSheetTotal

THIS DRAWING IS THE PROPERTY OF ALTYOR SOLUTIONS-ALTYOR GROUP. IT MAY BE NEITHER COPIED OR PROVIDED TO THIRD PERSONS OR COMPETITORS WITHOUT OUR APPROVAL.

This drawing is the property of ALTYOR Solutions. It can not be reproduced without its authorization. Altium Designer

MCU PIN OUT - PA PB PC PC

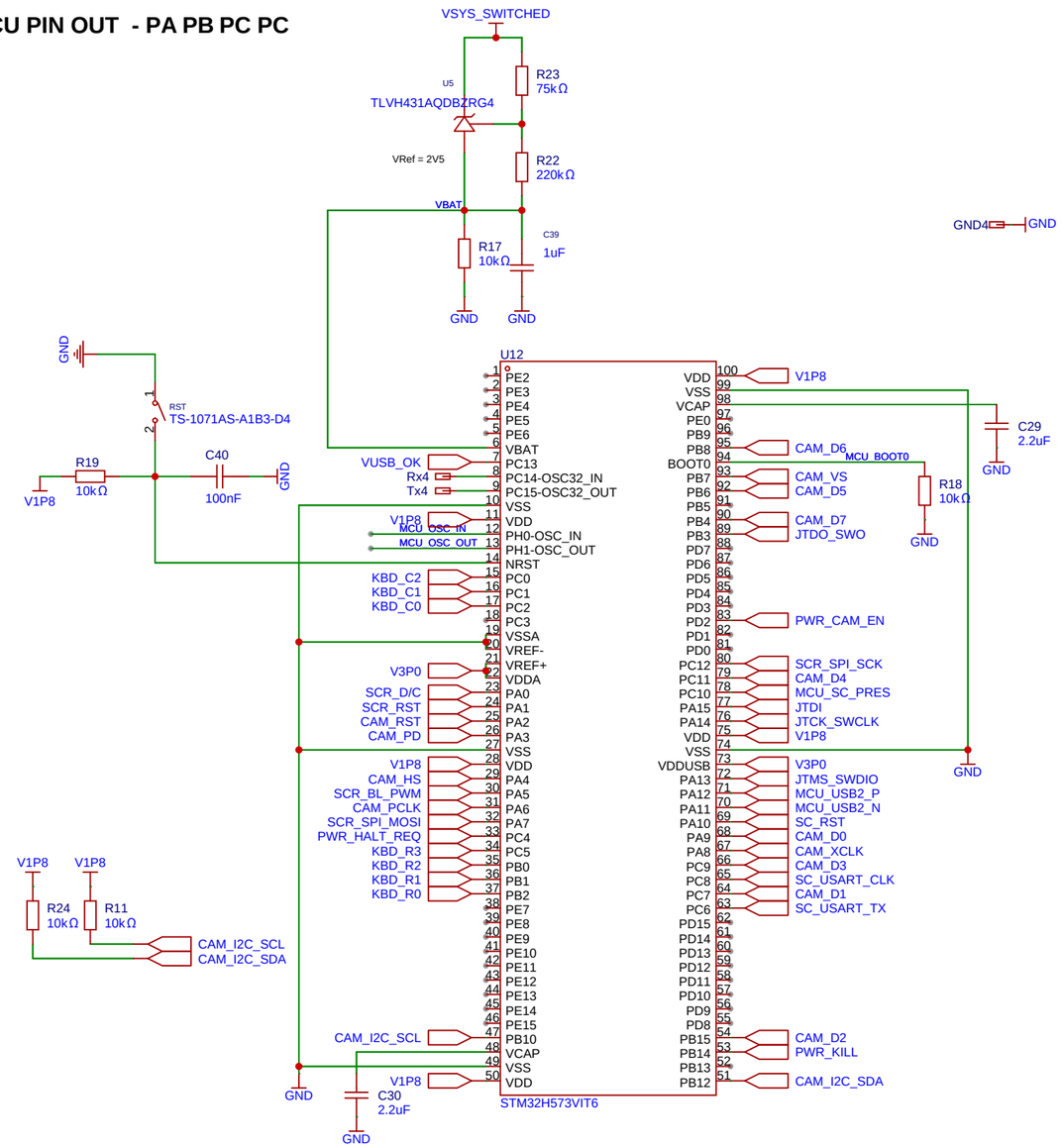

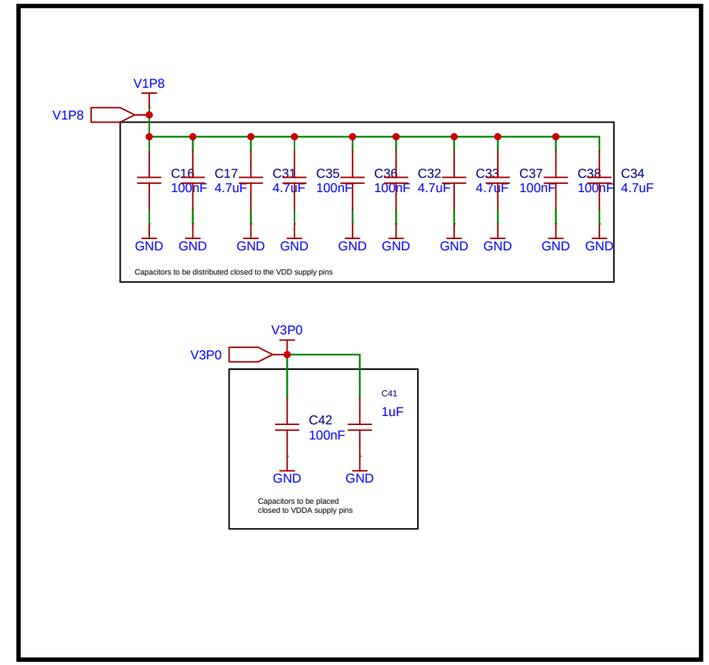

MCU PROGRAMMING PORT (JTAG)

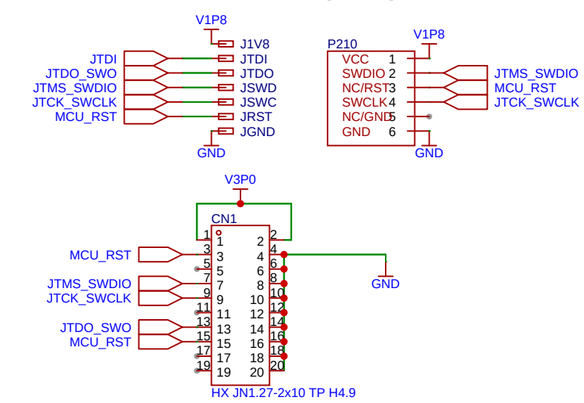

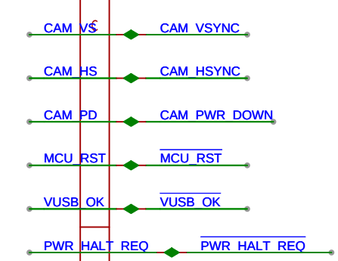

Project Title: ProjectTitle	
STATUS KPRO	Folio Title: *
KPRO Reader	Project Number: ProjectNumber — Board: ProjectBoardName
	Revision: ProjectSCHRev — Date: SchemaDate
	Drawn by: ProjectAutor — Folio: 2 / ProjectSheetTotal

This drawing is the property of ALTYOR Solutions. It can not be reproduced without its authorization. Altium Designer

THIS DRAWING IS THE PROPERTY OF ALTYOR SOLUTIONS-ALTYOR GROUP. IT MAY BE NEITHER COPIED OR PROVIDED TO THIRD PERSONS OR COMPETITORS WITHOUT OUR APPROVAL.

KEYBOARD MATRIX

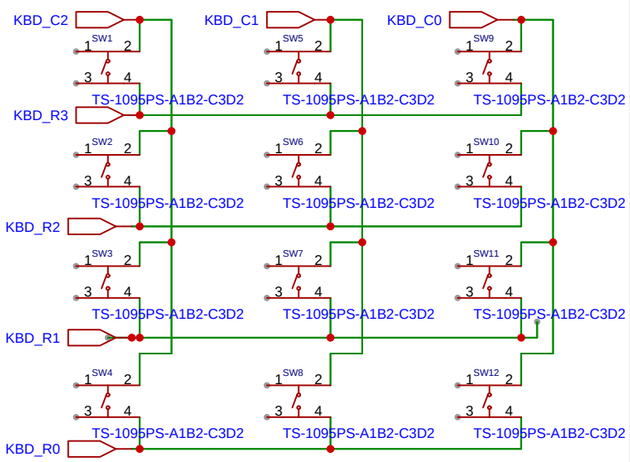

SCREEN CONNECTION

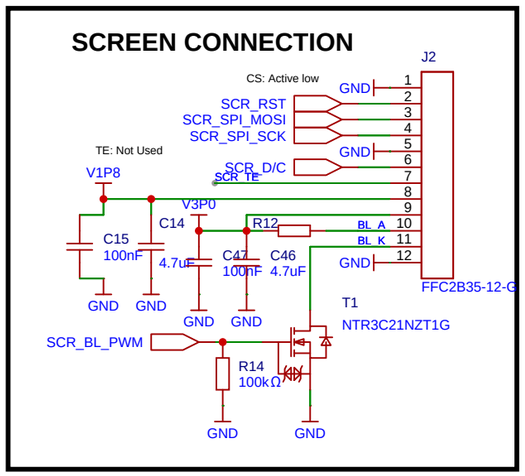

CAMERA CONNECTION

HREF have to be validated

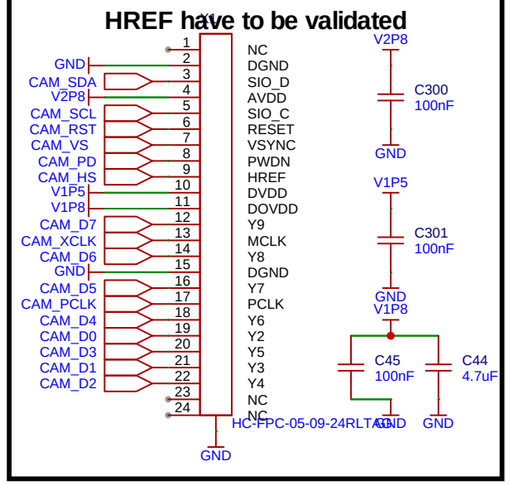

SMART CARD READER

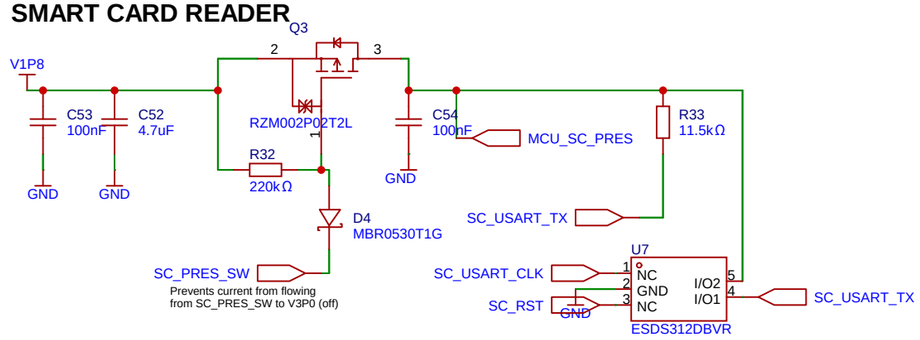

Project Title: ProjectTitle	
STATUS KPRO	Folio Title: *
KPRO Reader	Project Number: ProjectNumber-SCH / Board: ProjectBoardName
	Revision: ProjectSCHRev / Date: SchemaDate
16/02/2024 10:59:17	Drawn by: ProjectAutor / Folio: 3 / ProjectSheetTotal

This drawing is the property of ALTYOR Solutions. It can not be reproduced without its authorization. Altium Designer

THIS DRAWING IS THE PROPERTY OF ALTYOR SOLUTIONS-ALTYOR GROUP. IT MAY BE NEITHER COPIED OR PROVIDED TO THIRD PERSONS OR COMPETITORS WITHOUT OUR APPROVAL.

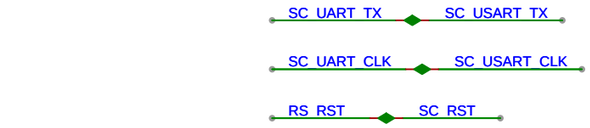

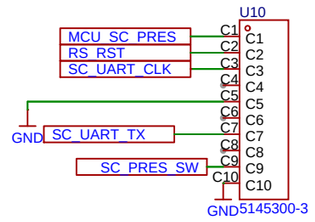

01 POWER

02 DETECT

03 MEASUREMENT

04 CPU

05 INDICATORS

06

07

Project Title: ProjectTitle

STATUS KPRO

KPRO Reader

Folio Title: * IndexSCH

Project Number: ProjectNumber

Board: ProjectBoardName

Revision: ProjectSCHRev

Date: SchemaDate

Drawn by: ProjectAutor

Folio: 1 / ProjectSheetTotal

This drawing is the property of ALTYOR Solutions. It can not be reproduced without its authorization. Altium Designer

THIS DRAWING IS THE PROPERTY OF ALTYOR SOLUTIONS-ALTYOR GROUP. IT MAY BE NEITHER COPIED OR PROVIDED TO THIRD PERSONS OR COMPETITORS WITHOUT OUR APPROVAL.