ABBREVIATIONS

@	AT
A OR AMP	AMPERE
ABV.	ABOVE
AF	AMP FRAME
A.F.C.	ABOVE FINISHED CEILING
A.F.F.	ABOVE FINISHED FLOOR
A.F.G.	ABOVE FINISHED GRADE
A.I.C.	AMPERE INTERRUPTING CAPACITY
AL	ALUMINUM
ALT.	ALTERNATE
ANNUN.	ANNUNCIATOR
ARCH.	ARCHITECT
AS	AMMETER SWITCH
AT	AMP TRIP
ATC	AUTOMATIC TEMPERATURE CONTROL
ATS	AUTOMATIC TRANSFER SWITCH
AUX.	AUXILIARY
BD	BUS DUCT
BKR.	BREAKER
C. OR CDT.	CONDUIT
C/B	CIRCUIT BREAKER
CBL.	CABLE
CKT	CIRCUIT
CLG.	CEILING
CONN.	CONNECTION
CONST.	CONSTRUCTION
CONT.	CONTINUOUS
CONTR.	CONTRACTOR
CU.	COPPER
DEMO.	DEMOLITION
DC	DIRECT CURRENT
DIA.	DIAMETER
DISC.	DISCONNECT
DIST.	DISTRIBUTION
DWG.	DRAWING
DP	DISTRIBUTION PANEL
E	EMERGENCY
EA.	EACH
E.C.	ELECTRICAL CONTRACTOR
ELEC.	ELECTRICAL
ELEV.	ELEVATOR
EMT	ELECTRICAL METALLIC TUBING
ENCL.	ENCLOSURE
E.R.	EXISTING RELOCATED
EQUIP.	EQUIPMENT
E.W.C.	ELECTRIC WATER COOLER
EX.	EXISTING TO REMAIN
F/A	FIRE ALARM
F.B.O.	FURNISHED BY OWNER
FDR.	FEEDER
F.H.C.	FIRE HOSE CABINET
FL.	FLOOR
FLUOR.	FLUORESCENT
F.S.	FLOW SWITCH
FUT.	FUTURE
G	EQUIPMENT GROUND CONDUCTOR
G.C.	GENERAL CONTRACTOR
G.F.I.	GROUND FAULT INTERRUPTER
G.F.S.C.	GROUND FAULT SENSING RELAY
GND.	GROUND
H.I.D.	HIGH INTENSITY DISCHARGE
H.O.A.	HAND–OFF–AUTOMATIC
HORIZ.	HORIZONTAL
H.P.	HORSEPOWER
HT.	HEIGHT
H.V.	HIGH VOLTAGE
HVAC	HEATING, VENTILATING, AIR CONDITIONING
IMC.	INTERMEDIATE METAL CONDUIT
JB	JUNCTION BOX
JUNC.	JUNCTION
KVA	KILOVOLT–AMPERE
KW	KILOWATT
KWH	KILOWATT–HOUR
L.A.	LIGHTNING SURGE ARRESTER
LTG.	LIGHTING
LV	LOW VOLTAGE
MAX.	MAXIMUM
MCB	MAIN CIRCUIT BREAKER
MCC	MOTOR CONTROL CENTER
MCP	MOTOR CIRCUIT PROTECTOR
MFR.	MANUFACTURER
MIN.	MINIMUM
M.L.O.	MAIN LUGS ONLY
MTD.	MOUNTED
N	NEUTRAL
N.C.	NORMALLY CLOSED
N.I.C.	NOT IN CONTRACT
N.O.	NORMALLY OPEN
N.T.S.	NOT TO SCALE
O.C.	ON CENTER
O.C.P.	OVERCURRENT PROTECTION
P	POLE
PB	PULL BOX
PNL.	PANEL
PWR.	POWER
RE	REMOVE EXISTING
REQ.	REQUIRED
SEC.	SECONDARY
SLD.	SINGLE LINE DIAGRAM
SLV.	SLEEVE
SPEC.	SPECIFICATION
SS.	SUBSTATION
S.T.	SHUNT TRIP
STD.	STANDARD
SW.	SWITCH
SWGR.	SWITCHGEAR
SYS.	SYSTEM
TEL.	TELEPHONE
TV	TELEVISION
TYP.	TYPICAL
UC	UNDERCOUNTER
U/F	UNFUSED
U.L.	UNDERWRITERS' LABORATORY
U.O.N.	UNLESS OTHERWISE NOTED
V	VOLT
VERT.	VERTICAL
W	WIRE
W	WATT
WP	WEATHERPROOF
XFMR	TRANSFORMER

PLAN SYMBOLS

- 5 — RECESSED OR SURFACE MOUNTED FLUORESCENT FIXTURE (ACTUAL SIZE) NUMBER INDICATES CIRCUIT, LETTER INDICATES SWITCH LEG (TYP)
- FLUORESCENT FIXTURE MOUNTED UNDERCOUNTER, PENDANT, ETC. (N.T.S.)
- TUBULAR FLUORESCENT FIXTURE
- DOWNLIGHT FIXTURE, CEILING OR WALL MOUNTED
- DIRECTIONAL FIXTURE, CEILING OR WALL MOUNTED
- EXIT FIXTURE, CEILING OR WALL MOUNTED
- EM — EMERGENCY BATTERY UNIT WITH REMOTE HEAD
- S — SINGLE POLE TOGGLE SWITCH
- S_3 S_4 — THREE AND FOUR WAY TOGGLE SWITCH
- S_{CF} — CEILING FAN CONTROL SWITCH
- S_M — MANUAL MOTOR STARTER SWITCH
- DUPLEX RECEPTACLE
- DUPLEX RECEPTACLE, SPLIT–SWITCHED YOKE
- QUADRAPLEX RECEPTACLE
- DUPLEX GROUND FAULT RECEPTACLE
- SPECIAL PURPOSE RECEPTACLE
- PUSH–BUTTON (DOORBELL OR GARAGE OPENER)
- J — CONCEALED JUNCTION BOX
- J — SURFACE MOUNTED JUNCTION BOX
- MOTOR BY DIV. 15
- MOTOR STARTER
- COMBINATION MOTOR STARTER AND MOTOR CIRCUIT PROTECTOR
- COMBINATION MOTOR STARTER AND DISCONNECT SWITCH
- COMBINATION MOTOR STARTER AND FUSED DISCONNECT SWITCH
- UNFUSED SAFETY DISCONNECT SWITCH
- SE — FUSED SAFETY DISCONNECT SWITCH
  (INDICATES FUSE TYPE)
  DE – DUAL ELEMENT
  CL – CURRENT LIMITING TIME DELAY
- BRANCH CIRCUIT WIRING CONCEALED IN WALL OR ABOVE CEILING CONSTRUCTION
- 5 — BRANCH CIRCUIT WIRING TO PANEL
  CIRCUIT NUMBER AT PANELBOARD
- ELECTRICAL PANELBOARD
- CR — CARD READER
- I — INTERCOM STATION
- VOICE OUTLET
- DATA OUTLET
- VOICE/DATA OUTLET
- TV — TELEVISION ANTENNA OUTLET
- F — FIRE ALARM MANUAL PULL STATION
- F — FIRE ALARM HORN/STROBE COMBINATION
- F — FIRE ALARM FLASHING LIGHT
- D PE — AUTOMATIC DETECTOR
  (DETECTOR CONTROL FUNCTION)
  S – AREA SMOKE, IONIZATION
  PE – SMOKE REFRACTION, PHOTO ELECTRIC
  D – DUCT MOUNTED, SMOKE IONIZATION
  R – THERMAL, RATE OF RISE
  F – THERMAL, FIXED TEMPERATURE
  FR – THERMAL, COMBINATION RATE OF RISE PLUS FIXED TEMPERATURE
  SS – 120V SINGLE STATION DETECTOR
  MS – 120V MULTI–STATION DETECTOR WITH ALARM BASE
  CO – CARBON MONOXIDE DETECTOR
- F — FIRE ALARM INTERFACE MODULE
  (MODULE CONTROL FUNCTION)
  F – FLOW SWITCH
  T – TAMPER SWITCH
  FP – FIRE PUMP MONITOR
  EL – ELEVATOR MONITOR

SINGLE LINE DIAGRAM SYMBOLS

- M — KILOWATTHOUR/DEMAND METER (FURNISHED BY UTILITY COMPANY)
- (CT) CURRENT TRANSFORMER
- (PT) POTENTIAL TRANSFORMER
- CONTROL WIRING
- CIRCUIT BREAKER OR MOTOR CIRCUIT PROTECTOR
- DISCONNECT SWITCH
- FUSE
- MOTOR STARTER
- COMBINATION MOTOR STARTER AND DISCONNECT SWITCH
- COMBINATION MOTOR STARTER AND CIRCUIT BREAKER OR MOTOR CIRCUIT PROTECTOR
- TRANSFORMER
- 25 — MOTOR BY DIV. 15 (NUMBER DENOTES HP)
- RESISTIVE LOAD
- PANEL — SINGLE SECTION PANELBOARD (ADDITIONAL SECTIONS SHOWN, IF REQUIRED)
- STARTER — WITHOUT INTEGRAL DISCONNECT SWITCH BY DIV. 15
- CONTROL PANEL — WITH INTEGRAL DISCONNECT SWITCH BY DIV.15

DRAWING LIST:

TYPE 1 BUILDING

E–CS	ELECTRICAL COVER SHEET
E–SLD	ELECTRICAL SINGLE LINE DIAGRAM
E–SP	ELECTRICAL SPECIFICATIONS
E1–1	ELECTRICAL TYPE 1 BUILDING – GROUND FLOOR PLAN (WEST) UNITS: A1 REVERSE, B1, C1 AND E1
E1–2	ELECTRICAL TYPE 1 BUILDING – GROUND FLOOR PLAN (EAST) UNITS: A1 AND B1 REVERSE
E1–3	ELECTRICAL TYPE 1 BUILDING – SECOND FLOOR PLAN (WEST) UNITS: A2 REVERSE, B2, C2 AND E2
E1–4	ELECTRICAL TYPE 1 BUILDING – SECOND FLOOR PLAN (EAST) UNITS: A2 AND B2 REVERSE

GENERAL NOTES:

1. ALL DEVICE SYMBOLS AND ABBREVIATIONS ON THIS DRAWING MAY NOT NECESSARILY APPEAR ON THE FLOOR PLANS AND DETAIL SHEETS. ONLY THOSE SYMBOLS INDICATED ON THE FLOOR PLANS ARE USED FOR THIS PROJECT. ALL OTHERS ARE TO BE CONSIDERED "NOT USED" AND SHOULD BE IGNORED.
2. FOR DESCRIPTION OF SYMBOLS, SEE "SYMBOL LIST" AND ELECTRICAL SPECIFICATIONS.
3. MOUNTING HEIGHTS SHALL BE AS SHOWN ON THE ARCHITECTURAL PLANS, SECTIONS AND ELEVATIONS. IN THE EVENT OF A MOUNTING HEIGHT CONFLICT, CONTACT THE ARCHITECT PRIOR TO INSTALLATION.
4. CONTRACTOR SHALL VERIFY ALL DOOR SWINGS BEFORE INSTALLING SWITCH BOXES.
5. FOR MOUNTING HEIGHTS OF UNDER CABINET LIGHTING FIXTURES AND OTHER TASK LIGHTING, REFER TO ARCHITECTURAL DETAILS.
6. ELECTRICAL CONTRACTOR SHALL COORDINATE THE EXACT LOCATION OF SUSPENDED AND/OR SURFACE–MOUNTED LIGHTING FIXTURES IN MECHANICAL AND STORAGE AREAS WITH OTHER TRADES PRIOR TO ROUGH–IN AND INSTALLATION.
7. REFER TO HEATING, VENTILATING, AIR–CONDITIONING AND PLUMBING SECTIONS OF THE SPECIFICATIONS AND DRAWINGS FOR REQUIRED CONTROL WIRING OF MECHANICAL EQUIPMENT.
8. THE ELECTRICAL CONTRACTOR SHALL PROVIDE EXPANSION FITTINGS IN ALL RACEWAYS CROSSING CONSTRUCTION OR EXPANSION JOINTS. REFER TO ARCHITECTURAL AND/OR STRUCTURAL DRAWINGS FOR LOCATIONS OF JOINTS.
9. UNLESS OTHERWISE NOTED, ALL PANELS, CABINETS AND THE LIKE IN ELECTRICAL CLOSETS OR EQUIPMENT ROOMS ARE TO BE MOUNTED ON STRUCTURAL CHANNEL FRAMING WHICH SHALL BE SECURED TO THE STRUCTURAL FLOOR AND CEILING SLABS.
10. WIRE SIZES INDICATED IN SCHEDULES ARE BASED ON NO MORE THAN A THREE MULTI–WIRED BRANCH CIRCUIT HOME RUN. UNLESS OTHERWISE NOTED ON DRAWINGS OR IN THE SPECIFICATIONS, THE ELECTRICAL CONTRACTOR SHALL USE MULTI–WIRED BRANCH CIRCUITS WHERE PRACTICAL. SIZE WIRE AND CONDUIT AS REQUIRED BY THE NATIONAL ELECTRICAL CODE. WHERE MULTI–WIRE BRANCH CIRCUITS EXCEED THREE, ADJUST THE WIRE SIZE IN ACCORDANCE WITH NOTE #8, TO TABLES 310–16 THROUGH 310–31 OF N.E.C.
11. REFER TO ARCHITECTURAL, STRUCTURAL, MECHANICAL, PLUMBING, AND FIRE PROTECTION DOCUMENTS FOR WORK OF OTHER TRADES THAT REQUIRES ELECTRICAL WORK SUCH AS, BUT NOT LIMITED TO, DUCT DETECTORS, TAMPER/FLOW SWITCHES, CONTROL CIRCUITS, ETC. ALL WORK SHALL BE INCLUDED IN THE BASE BID.

ADA TYPE "A" UNIT NOTES:

FOR BUILDING TYPE 1 WHERE TYPE "A" ACCESSIBLE DWELLING UNITS ARE TO BE CONSTRUCTED (UNITS A1 & C1), THE FOLLOWING MODIFICATIONS WILL APPLY:

- ALL SWITCHES SHALL BE NO HIGHER THAN 48" AFF.
- MICROWAVE SHALL BE LOCATED ON THE 34" COUNTER, NOT ABOVE THE RANGE. RELOCATE OUTLET TO COUNTER HEIGHT.
- RANGE HOOD SHALL BE INSTALLED IN PLACE OF MICROWAVE ABOVE THE RANGE. CONNECT RANGE HOOD TO KITCHEN CIRCUIT #1.
- PROVIDE SWITCH AT WALL LOCATION ABOVE COUNTER TO ACTIVATE RANGE HOOD.
- ALL RECEPTACLE OUTLETS, LIGHTING CONTROLS, APPLIANCE CONTROLS, FAUCET CONTROLS, OPERABLE WINDOWS, INTERCOM/SECURITY SYSTEMS NOT MENTIONED ABOVE, SHALL COMPLY WITH ALL REACH RANGES LISTED IN ANSI 117.1. COORDINATE OUT–OF–SCOPE ITEMS SUCH AS FAUCETS AND WINDOWS WITH THE APPROPRIATE TRADE CONTRACTOR TO ENSURE THIS REQUIREMENT IS MET.

L U M I N A I R E S C H E D U L E

Type	Description	Manufacturer	Catalog Number	Lamps No.	Lamps Type	Watts per Fixture	Voltage	Mounting	Alternate Manufacturers	Remarks
A	4FT LED strip light, white steel housing, frosted acrylic lens, x,xxx lumens, 0–10V driver.	Columbia	MPS4–30ML–CW–EDU	–	LED 3000K	32	120	Surface	Approved Equal	
B	Medium base lamp holder with pull chain and LED lamp.	Leviton	29816–C	1	17W LED A21	17	120	Ceiling	Approved Equal	
C	Bathroom vanity light bar, brushed nickel finish, medium base sockets with LED lamps.	Progress	P3053–09	3	11W LED A19	33	120	Wall	Approved Equal	Confirm mounting height with mirror location.
D	Decorative dining room chandelier, five light, brushed nickel finish, LED lamps	Progress	P4009–09	5	5W LED B10	25	120	Chain	Approved Equal	Field–coordinate mounting height.
E	20" ceiling flush–mount dome light, brushed nickel hardware, linen glass diffuser, medium base sockets with LED lamps.	Progress	P350179–009	4	11W LED A19	44	120	Ceiling	Approved Equal	
F	8" globe ceiling fixture, white finish, medium base socket with LED lamp.	Progress	P3705–10	1	11W LED A19	11	120	Ceiling	Approved Equal	
G	LED low–voltage undercabinet light bar. Provide various lengths to satisfy overall run shown on plan. Provide remote power supply as required.	aspectLED	AL–LB–LP–24IN–24VDC–3000K	–	LED 3000K	3 PER FT	120	Surface	Approved Equal	24" catalog number shown. Provide lengths as required.
H	Exterior patio wall lantern, black finish.	Trans Globe	TG 40455BLK	1	11W LED A19	11	120	Wall	Approved Equal	Field–coordinate mounting height
J	11" diameter, 21.5" high decorative pendant, brushed nickel finish, white etched glass diffuser, medium base socket with LED lamp.	Progress	P3793–09	1	15W LED A19	15	120	Pendant	Approved Equal	Field–coordinate mounting height.
K	11.5" diameter ceiling fixture with brushed nickel finish and white alabaster glass diffuser, medium base socket with LED lamp.	Progress	P3688–09	1	15W LED A19	15	120	Ceiling	Approved Equal	

NOTE: Confirm color temperature with Owner prior to ordering

hpeGROUP
HVAC • Plumbing • Electrical
905 Castle Hill Lane
Devon, PA 19333
p: 610.296.5628
e: info@hpegroup.com

SEAL

PROJECT

RESIDENCES AT WILLOW RIDGE
BUILDING #10
ALLEN TOWNSHIP, PA
Patriarch Willow Ridge LP
311 N Sumneytown Pike, STE 1A
North Wales, PA 19454

This drawing is provided as an instrument of service by hpeGROUP, LLC to the Client. Use or reference of this drawing by any party (Owner, Contractor, Tenant, Design Professional, etc.) is conditioned by the following. hpeGROUP, LLC relied upon the accuracy of information provided by the Client and other parties to this project in preparation of this drawing. Drawings and specifications herein do not constitute a warranty of construction and/or system performance where operation and maintenance of a system has been negligent. All parties agree to hold hpeGROUP, LLC harmless for claims arising from negligent information provided, negligent construction, negligent operations or negligent maintenance.

REVISION LOG

DRAWING ISSUE:

DATE: 2/16/24
ISSUE: BID/PERMIT ISSUE

PROJECT #: 23-125
SCALE: AS NOTED
DRAWN BY: CAD
CHECKED BY: GJG

DISCIPLINE:
ELECTRICAL

DRAWING TITLE:
COVER SHEET

DRAWING NUMBER:
E-CS

©2024 hpeGROUP, LLC

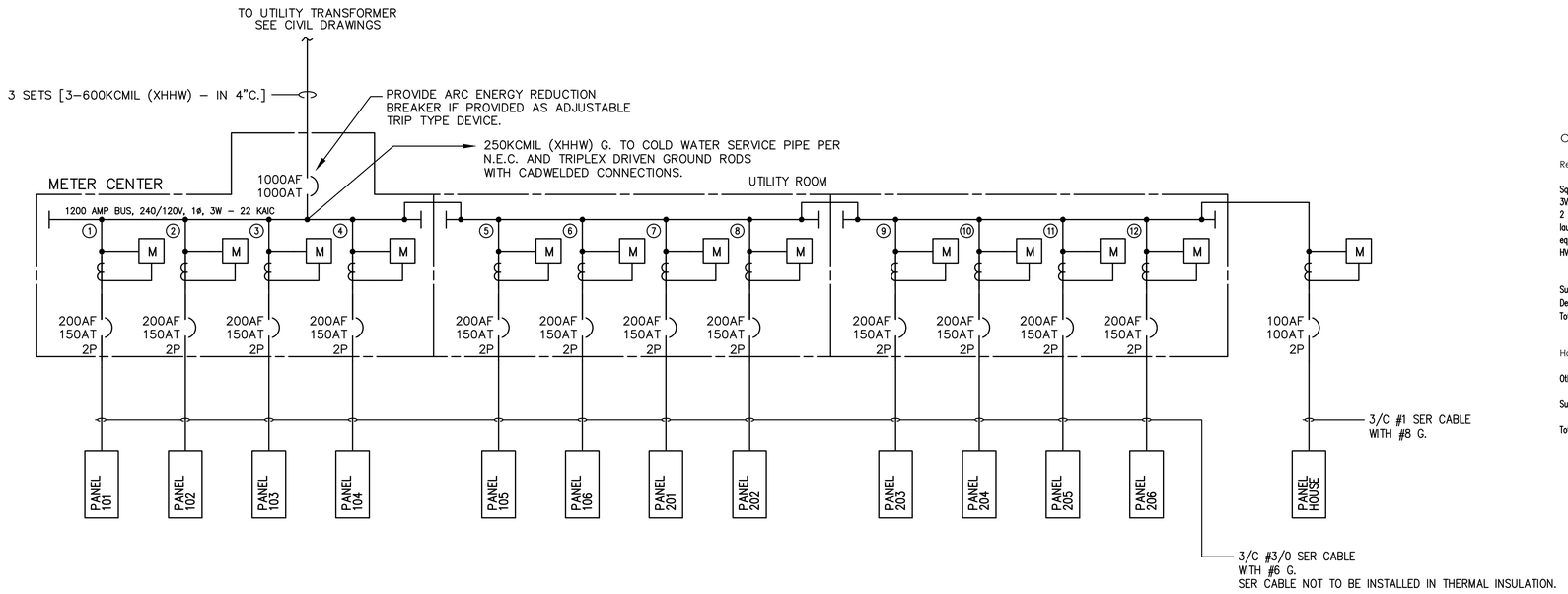

1 E1-1 SINGLE LINE DIAGRAM

COORDINATE SHORT CIRCUIT RATING OF ALL ELECTRICAL EQUIPMENT WITH UTILITY SERVICE REQUIREMENTS.

Optional Calculation - NEC Article 220 - Part IV

Residential Units - 12 units total

Square footage	12900	sf
3VA/sf	38700	VA
2 sm. appl.	36000	VA
laundry	0	VA
equipment	267000	VA
HVAC	44400	VA
Subtotal	386100	VA
Demand factor	0.41	
Total demand	158301	VA

Typical apartment equipment	
- dishwasher	1000
- disposal	750
- oven	8000
- refrigerator	1000
- hot water heater	4500
- microwave	1500
- dryer	5500
	22250 VA

660 amps at 240V/1PH

House Loads

Other	0	VA
Subtotal	0	VA
Total Service Load	158301	VA

660 amps at 240V/1PH
X 125%
824 amps -- use 1000A main circuit breaker

Panel Name: Unit Type A1 — 200A MLO — 30 pole — 22 KAIC — 240/120V-1PH-3W — Flush — Master Bedroom

Cir. No.	Cir. Bkr.	Wire Size	Description	Load (VA) A	Load (VA) B	Load (VA) A	Load (VA) B	Description	Wire Size	Cir. Bkr.	Cir. No.
1	20/1	2#12	Rec.- Kitchen 1	1500		1080		Rec.- Living Room	2#14	15/1	2
3	20/1	2#12	Rec.- Kitchen 2		1500		1190	Lighting	2#12	20/1	4
5	50/2	3#8	Rec.- Range	4000		1080		Rec.- Master Bedroom	2#14	15/1	6
7		#10G			4000		1500	Rec./Ltg.- Master Bathroom	2#12	20/1	8
9	20/1	2#12	Dishwasher	1000		500		Rec./Ltg.- Exterior	2#12	20/1	10
11	15/1	2#12	Rec.- Dining Room/Hallway		540		1662	A/C Unit	2#10	25/2	12
13	20/1	2#12	Rec.- Refrigerator	1200		1662					14
15	20/1	2#12	Rec.- Microwave		1500		100	Smoke Detectors	2#12	20/1	16
17	20/1	2#12	Rec.- Washer	1200		900		Rec.- Bedroom	2#14	15/1	18
19	30/2	3#10	Rec.- Dryer		2750		1500	Rec./Ltg.- Bathroom	2#12	20/1	20
21		#10G		2750		2250		Water Heater	2#10	30/2	22
23	15/1	2#14	Baseboard Heater (utility room)		400		2250		#10G		24
25			Space	0		500		Insert Heater	2#12	20/2	26
27			Space		0		500	(second floor units only)			28
29			Space	0		0		Space			30

Load Summary (by phase):

A	19622
B	19392
Total	39014

Connected Load
162.6 amps at 240V, single phase

Load Calculation (volt-amps)

General Lighting Load (Table 220.12):	3270	(3VA/square-foot)
Small Appliance Circuit Load (220.52A):	3000	(subject to demand factor per 220.52)
Laundry Circuit Load (220.52B):	0	(subject to demand factor per 220.52)
Lighting Load Demand Factor (Table 220.42):	0.35	(after the first 3000VA at 100%)
Sub-total:	4145	
Cooking Load (220.55):	8000	
Dryer Load (220.54):	5500	
Appliance Load:	9940	
75% diversity (220.53)	0.75	
Sub-total:	7455	
HVAC Load (220.51):	3324	
Total Demand Load:	28424	
Panel Load:	118 amps at 240V/1PH	
	x 125% = 148 amps	
	Use 150A circuit breaker (minimum)	

Panel Name: House Panel — 125A MLO — 20 pole — 22 KAIC — 240/120V-1PH-3W — Utilty Room

Cir. No.	Cir. Bkr.	Wire Size	Description	Load (VA) A	Load (VA) B	Load (VA) A	Load (VA) B	Description	Wire Size	Cir. Bkr.	Cir. No.
1	20/1	2#12	Ltg.- Exterior	200		1000		Insert Heater	2#12	20/2	2
3	15/1	2#14	Fire Alarm Panel		200		1000	(Sprinkler Room)			4
5	20/1	2#12	Rec.- Sprinkler Room	500		222		Site Lighting	2#10	20/1	6
7	20/1	2#12	Rec.- Electrical Room		500		1000	Insert Heater	2#12	20/2	8
9	20/1	2#12	Rec.- Demarc	500		1000		(Electrical Room)	#12G		10
11	20/1	2#12	Rec.- Demarc		500		0	Space			12
13			Space	0		0		Space			14
15			Space		0		0	Space			16
17			Space	0		0		Space			18
19			Space		0		0	Space			20

Load Summary (by phase):

A	3422
B	3200
Total	6622

Connected Load
27.6 amps at 240V, single phase

Note 1: Provide photocell at roof for control of exterior lighting (circuit #1)
Note 2: Provide electromechanical timeclock for control of site lighting circuit.

hpe GROUP
HVAC • Plumbing • Electrical
905 Castle Hill Lane
Devon, PA 19333
p: 610.296.5628
e: info@hpegroup.com

SEAL

PROJECT

RESIDENCES AT WILLOW RIDGE
BUILDING #10
ALLEN TOWNSHIP, PA
Patriarch Willow Ridge LP
311 N Sumneytown Pike, STE 1A
North Wales, PA 19454

This drawing is provided as an instrument of service by hpeGROUP, LLC to the Client. Use or reference of this drawing by any party (Owner, Contractor, Tenant, Design Professional, etc.) is conditioned by the following. hpeGROUP, LLC relied upon the accuracy of information provided by the Client and other parties to this project in preparation of this drawing. Drawings and specifications herein do not constitute a warranty of construction and/or system performance where operation and maintenance of a system has been negligent. All parties agree to hold hpeGROUP, LLC harmless for claims arising from negligent information provided, negligent construction, negligent operations or negligent maintenance.

REVISION LOG

DRAWING ISSUE:

DATE: 2/16/24
ISSUE: BID/PERMIT ISSUE

PROJECT #: 23-125
SCALE: AS NOTED
DRAWN BY: CAD
CHECKED BY: GJG

DISCIPLINE:
ELECTRICAL

DRAWING TITLE:
SINGLE LINE DIAGRAM

DRAWING NUMBER:
E-SLD

©2024 hpeGROUP, LLC

ELECTRICAL SPECIFICATIONS

PART 1 GENERAL

1.01 SUMMARY

A. Section Includes:

1. The work shall include materials, equipment, and labor for systems as shown on contract documents and work for other Divisions required to complete the work ready for operation.

2. Contractor shall provide labor, material, equipment, and services for the proper installation and operation of the electrical work as indicated on the Drawings and as specified.

3. Labor, material, equipment, and service obviously necessary for the proper installation and operation of electrical systems, although not specifically mentioned or shown, shall be provided.

4. No consideration or allowance shall be granted for alleged misunderstanding of the Contract Documents and the work to be performed.

B. Related Documents and Sections:

1. Coordinate this specification with the Architectural Specifications.

1.02 REFERENCE, CODES AND SPECIFICATIONS

A. Electrical work shall conform with the latest edition of the National Electrical Code and applicable laws, codes and regulations of municipal, county, state, federal authorities, utility companies, insurance agencies and other authority having jurisdiction over the work.

1.03 PERMITS AND FEES

A. The OWNER shall be responsible for permits and inspection fees as required by the authorities having jurisdiction. Submit inspection certificates to the Owner prior to Final Acceptance of the work. An electrical inspection certificate for each class of work requiring inspection, must be submitted prior to or with the final payment invoice. Contractor coordinate application for the inspection with the Owner during construction.

1.04 FIELD CONDITIONS

A. Before submitting his bid, Trade Contractor shall verify existing conditions in the field. Failure to do so shall not relieve Trade Contractor of his obligation to pay for costs that may be incurred due to conditions that may affect the cost of installing his work.

B. Before ordering material or doing work, the Trade Contractor shall check and verify measurements, including lines, grades, pipe and duct elevations at the building and shall be responsible for the correctness of same. No extra compensation shall be allowed on account of differences between actual dimensions measured and those indicated on the Drawings. Significant differences which may be found shall be submitted to the Architect/Engineer for consideration before proceeding with the work.

1.05 TERMINOLOGY

A. "Trade Contractor" when used in Division 16 refers to the Trade Contractor responsible for all work under Division 16.

B. "Provide" shall mean furnish and install, make final connections and leave in a proper operating condition.

C. "Furnish" shall mean to obtain and deliver to the job site and deposit where directed.

D. "Electrical Work" or "work" shall mean labor, transportation, material, equipment, scaffolding, rigging, tools, supervision, services, and other incidental items or services necessary for a complete and operable installation.

E. "Wiring" shall include the conductors, raceways, and connections to the equipment, apparatus, outlets and other specialties.

F. "Conductor", "wire", and "cable" shall mean insulated conductor.

1.06 CONTRACT DRAWINGS

A. The Drawings accompanying this specification form a part of this Specification upon which the work shall be based. Drawings are not to be scaled.

B. The electrical systems are indicated on the Drawings.

C. Drawings are diagrammatic, small scale and indicate the general arrangement of systems and work included. However, certain raceways, bends, fittings, boxes, system components, appurtenances and related specialties are not shown, but shall be provided to insure a complete installation.

D. Consult the Drawings for exact location of fixtures and equipment. Where same are not definitely located, obtain this information from the Architect/Engineer.

1.07 WARRANTIES

A. Work furnished under the Contract shall be warranted against defects in workmanship and materials for a period of not less than one (1) year, or as otherwise specified, from the date of Final Acceptance of the installation. Defects of workmanship developing during this period shall be remedied, and defective material replaced, without additional cost.

B. Trade Contractor shall warrant that the installation when operated in accordance with his instructions shall develop capacities and characteristics indicated or specified and shall fulfill each and every requirement of the Specifications and Drawings, and should any part of the installation fail to do so, the Trade Contractor shall without delay and without cost provide whatever additional equipment, material, and labor necessary to correct the faulty installation, and demonstrate complete compliance with these requirements.

C. The Trade Contractor shall warrant that defects in workmanship, materials or performance, and damage caused by such defects, shall be repaired and replaced within a reasonable time to be specified by notice. In default thereof, the Trade Contractor hereby agrees that such work may be done by others and the costs charged to the Trade Contractor.

D. Install equipment in strict accordance with manufacturer's instructions, which shall be considered part of these specifications, and provide all appurtenances necessary for a complete and functioning system.

E. Follow all OSHA and Owner standards during installation. Coordinate all shutdowns with Owner a minimum of 48 hours prior to shutdown.

F. Contractor shall be responsible for all materials, labor, and equipment to comply with local, state and national codes, regulations and laws in conjunction with any other regulatory bodies having jurisdiction. All equipment shall bear a U.L. label.

G. Contractor is responsible for final confirmation of installation conforming to all applicable codes and recommendations. Engineering drawings do not provide warranty of installation.

PART 2 PRODUCTS

2.01 GENERAL

A. Material and equipment in the work shall be new, first grade, the best of their respective kinds, and appropriate for the application and environment.

B. Material or equipment specified by manufacturer, brand name, type, or catalog number, are designed to establish standards of desired quality, style, performance, electrical, mechanical and physical characteristics, and dimensions.

C. When directed by the Architect/Engineer the Trade Contractor shall furnish the following information:

1. For each proposed substitute item, the Trade Contractor shall furnish a written document explaining in detail how the substitute item is equal to the specified item including the following: dimensions, mounting, electrical and operating characteristics, performance data, fabrication materials, finishes, operational features, space requirements, and photometric data for lighting fixtures.

2. The Trade Contractor's cost for each specified item and each proposed substitute item shall be included.

2.02 WIRE AND CABLE

A. Wire and cable for site distribution, power, lighting, control, signal circuits, etc., shall have copper conductors of not less than 98 percent conductivity and shall be insulated (THHN 90°) to 600V. All conductors shall be stranded. Equivalent ampacity aluminum feeder conductors are also acceptable.

2.03 RACEWAY

A. Electric Metallic Tubing (EMT)

1. Electrical metallic tubing shall be standard galvanized or sheradized thin wall steel conduit conforming to the latest edition of FS WW-C-563. Manufacturers: Republic, National, Triangle, Allied.

2. Fittings for electrical metallic tubing shall be rain-tight and concrete-tight compression type or steel set screw type, if approved, same material as EMT. Manufacturers: O-Z Gedney Company, Appleton, Raco.

B. Flexible metal conduit

1. Flexible metal conduit shall be zinc coated sheet metal strips in interlocked construction conforming to the latest edition of FS WW-C-566. Provide liquid-tight conduit where required. Manufacturers: Sealtite, Triangle.

2. Fittings for flexible metal conduit shall be iron or steel, cadmium or zinc coated conforming to FS W-F-406. Manufacturers: Thomas and Betts Company, Crouse-Hinds Type LT Series.

C. POLYVINYL CHLORIDE (PVC) – SCHEDULE 40.

2.04 OUTLET BOXES

A. Material, size and installation for outlet boxes shall comply with NEC, Article 370.

B. Boxes shall be Raco, Steel City or Appleton; catalogue numbers based on Raco, unless otherwise indicated. In general the type of boxes shall be as follows:

1. In stud walls; for single outlet use 4 inches square by 2-1/8 inches deep box No. 232 or 233. For ganged outlets use 4-1/2 inches high by 1-5/8 inches deep multiple gang boxes No. 951 through No. 958. Boxes to be provided with raised covers of depth as required for thickness of wall materials.

2. In suspended ceilings; use 3-1/2 inches deep octagon box No. 280 or No. 281 with fixture studs and steel mounting bars.

2.05 PULL AND JUNCTION BOXES

A. Construction, sizes and installation of pull and junction boxes shall comply with NEC, Article 314.

B. Pull and junction boxes not specifically described in NEC, Article 314, shall be fabricated of code gauge galvanized steel with screw covers, brass screws and hardware with enamel finish.

2.06 RECEPTACLES AND SWITCHES

A. Duplex, 20 ampere, 125 volt, 2 pole, three wire grounding type with NEMA-5-20R configuration, white face specification grade with provisions for back or side wiring.

1. Architect/Engineer shall have the option of specifying other colors.

2. Coordinate any special NEMA receptacle requirements with appliance provided (e.g. dryer, range, etc.)

B. Provide tamper-resistant outlets in locations as required by NEC Article 406.12.

C. Switches shall be residential grade.

D. Switches shall be white handle, quiet type, combination back and side wired, toggle switches.

1. Architect/Engineer shall have the option of specifying handles of other standard colors.

E. Switches shall be single pole, two pole, 3- or 4-way as the control demands, rated not less than 20 amperes, 120-277 volts AC.

2.07 PLATES AND COVERS

A. Plates shall be residential grade except as otherwise noted.

B. Plates shall be constructed of white nylon.

C. Plates shall be attached to outlet box with flush oval head machine screws, set true and plumb against wall. Screws shall be same finish as plates.

2.08 PANELBOARDS

1. BASIS OF DESIGN IS SQUARE D NQOD – CLASS 1630, OR EQUAL BY CUTLER-HAMMER (BR OR CH SERIES), SIEMENS, OR GENERAL ELECTRIC.

2. DEAD-FRONT INTERIOR SHALL BE RATED AT 240VAC WITH (1) CONTINUOUS, COPPER PLATED BUS BAR PER PHASE. BUSSING SHALL HAVE SEQUENTIALLY PHASED CONNECTIONS SUITABLE FOR PLUG-IN OR BOLT-ON BRANCH DEVICES.

3. PROVIDE A SOLIDLY-GROUNDED ALUMINUM GROUND BAR.

4. INTERIOR SHALL BE FIELD-CONVERTIBLE FROM BOTTOM TO TOP FEED AND FROM MAIN LUG TO MAIN CIRCUIT BREAKER STYLE.

5. SINGLE-POLE BRANCH CIRCUIT BREAKERS SHALL BE THE PLUG-IN TYPE. MULTI-POLE BRANCH CIRCUIT BREAKERS SHALL BE BOLT-ON.

6. BOX AND TRIM SHALL BE NEMA TYPE 1 ONE-PIECE WITH LOCKABLE DOOR. FLUSH OR SURFACE AS INDICATED ON PLANS.

7. MEASURE STEADY-STATE CURRENTS AND REARRANGE BRANCH CIRCUITS AS NECESSARY TO MAINTAIN PHASE BALANCE WITHIN 20%.

8. PROVIDE ARC-FAULT CIRCUIT BREAKERS FOR ALL CIRCUITS SERVING OUTLETS AS REQUIRED IN 210.12.

2.09 FIRE ALARM

A. THE FIRE ALARM SYSTEM SHALL BE A CONVENTIONAL-STYLE FIRE ALARM SYSTEM WITH AUTOMATIC FIRE ALARM DETECTION IN COMMON AREAS, AND AUDIBLE NOTIFICATION ONLY IN RESIDENTIAL UNITS. FIRE ALARM CONTROL PANEL SHALL BE SILENT KNIGHT #SK-2224 OR EQUAL.

B. INITIATING DEVICES SHALL BE 2-WIRE CONVENTIONAL DETECTORS BY SYSTEMSENSOR, OR EQUAL.

C. NOTIFICATION APPLIANCES SHALL BE 24VDC HORNS, OR HORN/STROBE COMBINATION UNITS BY SYSTEMSENSOR, OR EQUAL. HORNS IN RESIDENTIAL UNITS SHALL BE LOCATED TO PROVIDE 70dB MIN. AT PILLOW.

D. FIRE ALARM SYSTEM SHALL HAVE RELAYS INTERCONNECTED WITH ALL AUTOMATIC DOOR LOCKS AND SHALL RELEASE SAID LOCKS UPON SYSTEM ALARM.

E. FIRE ALARM SYSTEM SHALL MONITOR SPRINKLER SYSTEM VIA FLOW/TAMPER SWITCHES.

F. FIRE ALARM SYSTEM WIRING SHALL BE INSTALLED IN A DEDICATED METALLIC CONDUIT SYSTEM WHERE EXPOSED AND SUBJECT TO PHYSICAL DAMAGE. PLENUM-RATED FIRE ALARM CABLE MAY BE USED WITHIN CONCEALED CONSTRUCTION.

G. FIRE ALARM SYSTEM SHALL MEET OR EXCEED THE REQUIREMENTS LISTED IN ANSI C2, NFPA 70, NFPA 72, U.L. 1971, AND OTHER REQUIREMENTS BY STATE AND/OR LOCAL AUTHORITIES HAVING JURISDICTION.

H. PROVIDE, IN ACCORDANCE WITH MANUFACTURER'S WRITTEN INSTRUCTIONS, WIRING, CONNECTIONS, RACEWAY (WHERE APPLICABLE) AND OUTLET BOXES REQUIRED FOR INSTALLATION OF A COMPLETE AND OPERATIONAL SYSTEM.

I. PROVIDE SIGNAL CIRCUIT WIRING SUCH THAT ALL AUDIBLE AND VISUAL SIGNALS, INCLUDING THOSE AT END OF EACH RUN, RECEIVE FULL POWER AS REQUIRED FOR PROPER OPERATION.

J. LOW-VOLTAGE FIRE ALARM RELATED WIRING SHALL NOT BE RUN IN THE SAME RACEWAY AS 120 VOLT POWER WIRING.

K. CABLE AND WIRING SIZING AND CONSTRUCTION TYPE SHALL BE AS RECOMMENDED IN WRITING BY SYSTEM MANUFACTURER.

L. PROVIDE BACK-UP BATTERIES IN THE CONTROL PANEL TO PROVIDE CODE-REQUIRED STANDBY AND ALARM OPERATION. FINAL BATTERY CALCULATION BY MANUFACTURER.

M. FIRE ALARM SHALL BE FULLY TESTED AND BE IN COMPLETE OPERATION PRIOR TO ACCEPTANCE BY TENANT AND LANDLORD.

N. PROVIDE (2) DEDICATED PHONE LINES TO FIRE ALARM CONTROL PANEL.

O. PROVIDE CONNECTION FROM FIRE ALARM SYSTEM TO SPRINKLER BELL AS REQUIRED (BELL PROVIDED BY OTHERS).

PART 3 EXECUTION

3.01 INSTALLATION OF CONDUCTORS

A. Great care shall be exercised in pulling wires into raceways so as not to injure the insulation. Only UL approved pulling compounds, such as Thomas and Betts Type "SWP, shall be used to assist in the pulling of wires.

B. Vertical cables shall be supported at intervals not greater than those listed in the NEC, Paragraph No. 300-19.

C. Splicing shall be within outlet boxes or junction boxes. No splicing shall be permitted in mains or feeders.

D. Conductors No. 10 AWG and smaller shall be made electrically and mechanically secure with mechanical "twist" type connectors.

E. Wires within equipment, such as panelboards, shall be neatly arranged and tied with cable ties.

F. Branch circuit conduits shall contain not more than one conductor of each phase (A, B, C) and neutral conductor, one equipment grounding conductor (if required), and associated switch or control wiring (if required), unless indicated otherwise.

G. Where cable passes through fire rated structures provide fireproof fittings.

3.02 RACEWAYS AND FITTINGS

A. Raceways shall be concealed in the construction except as otherwise specified or shown.

1. Raceways installed exposed or in accessible spaces shall be placed at right angles to or parallel with the building walls and ceilings.

2. Conduit runs installed in slabs or below grade shall be rigid steel conduit wherever the conduit exits to another space above grade.

B. Provide pull boxes as follows:

1. Where more than four 90 degree bends are required.

2. Not more than 100 feet apart.

C. Conduit bends shall be the long radius type. When sufficient area is not available for turning conduits without exposing them, adjust the conduit routing or provide compound bends so as to keep the conduit from being exposed.

D. Conduits shall be installed with a minimum separation of 6 inches between electrical raceways and hot water or steam lines. When installed at closer distance, provide insulating pipe covering on the hot water and steam lines.

E. Where conduit terminates in a cabinet, box or auxiliary gutter, the conductors shall be protected by an insulating bushing. Locknuts shall be provided both inside and outside of the enclosure.

F. Swab out and make raceways dry. Do not install wire until the area is protected from the weather and swabbing of raceways has been completed.

G. A pull wire shall be installed in empty raceways. Pull wire shall be 200 pound test nylon. Both ends shall be identified by means of labels or tags, reading "PULL WIRE" and giving the origination and termination points.

3.03 WIRING METHODS

A. Generally, wiring shall be done with insulated conductors and ground wire in a metallic sheath. All wiring shall be installed concealed in the construction, except in mechanical or electrical spaces, open construction areas or where shown on the Drawings.

B. Install methods are as follows:

1. Use rigid steel conduit for all feeders installed outside or where subject to physical damage.

2. Use Type MC cable for all feeder risers to individual units.

3. Use NM cable for all concealed lighting, appliance, and receptacle branch circuits.

4. Use flexible metal conduit for connections to motors and transformers. Use liquidtight flexible metal conduit where such equipement is outside.

C. Raceways shall be supported to comply with the NEC.

D. For telephones and cable outlets, provide a single gang box with blank plate and pull string up to accessible ceiling space. Intercom devices are to be semi- flush.

3.05 JUNCTION AND PULL BOXES

A. Boxes shall be installed parallel with walls and ceilings, and shall be accessible.

B. Boxes shall be installed in the raceway systems to provide access to conductors for connections and for ease of installing conductors.

C. Each junction or pull box installed in buildings shall be permanently labeled in words with letters at least one inch high identifying each separate service in the box.

3.06 OUTLET BOXES

A. Outlet boxes installed in fire-resistant partitions shall be steel construction. See architectural drawings for locations of fire-resistant partitions.

B. Where steel outlet boxes are installed in fire-resistant partitions, they shall not exceed 16 sq.in. in area.

C. Where steel outlet boxes are installed on both faces of the fire-rated partition, the fire-resistance rating of the partition shall be maintained by one of the following methods:
- Separate such outlet boxes by more than 24 inches
- Provide solid fire blocking between the affected outlet boxes
- Protect each affected outlet box through the use of U.L. listed fire-rated putty pads.

3.07 MULTI-DWELLING UNIT MEDIA ENCLOSURE

A. Provide 120V power to each Multi-Dwelling Unit (MDU) media enclosure as shown on plan.

B. Provide connection points in each MDU for television, voice and data services.

C. For each telephone outlet shown on plan, provide (1) Cat 5e cable from outlet to MDU.

D. For each voice/data outlet shown on plan, provide (2) Cat 5e cables from outlet to MDU.

E. For each TV outlet shown on plan, provide (1) RG-6 coax cable from outlet to MDU.

F. Provide Cat 5e homeruns for voice and data from MDU to demarcation point.

G. Provide RG-6 homerun for TV from MDU to demarcation point.

H. Provide all appropriate TV, voice and data jacks and faceplates.

hpe GROUP
HVAC • Plumbing • Electrical
905 Castle Hill Lane
Devon, PA 19333
p: 610.296.5628
e: info@hpegroup.com

SEAL

PROJECT

RESIDENCES AT WILLOW RIDGE
BUILDING #10
ALLEN TOWNSHIP, PA
Patriarch Willow Ridge LP
311 N Sumneytown Pike, STE 1A
North Wales, PA 19454

This drawing is provided as an instrument of service by hpeGROUP, LLC to the Client. Use or reference of this drawing by any party (Owner, Contractor, Tenant, Design Professional, etc.) is conditioned by the following. hpeGROUP, LLC relied upon the accuracy of information provided by the Client and other parties to this project in preparation of this drawing. Drawings and specifications herein do not constitute a warranty of construction and/or system performance where operation and maintenance of a system has been negligent. All parties agree to hold hpeGROUP, LLC harmless for claims arising from negligent information provided, negligent construction, negligent operations or negligent maintenance.

REVISION LOG

DRAWING ISSUE:

DATE: 2/16/24
ISSUE: BID/PERMIT ISSUE

PROJECT #: 23-125
SCALE: AS NOTED
DRAWN BY: CAD
CHECKED BY: GJG

DISCIPLINE:
ELECTRICAL

DRAWING TITLE:
SPECIFICATIONS

DRAWING NUMBER:
E-SP

©2024 hpeGROUP, LLC

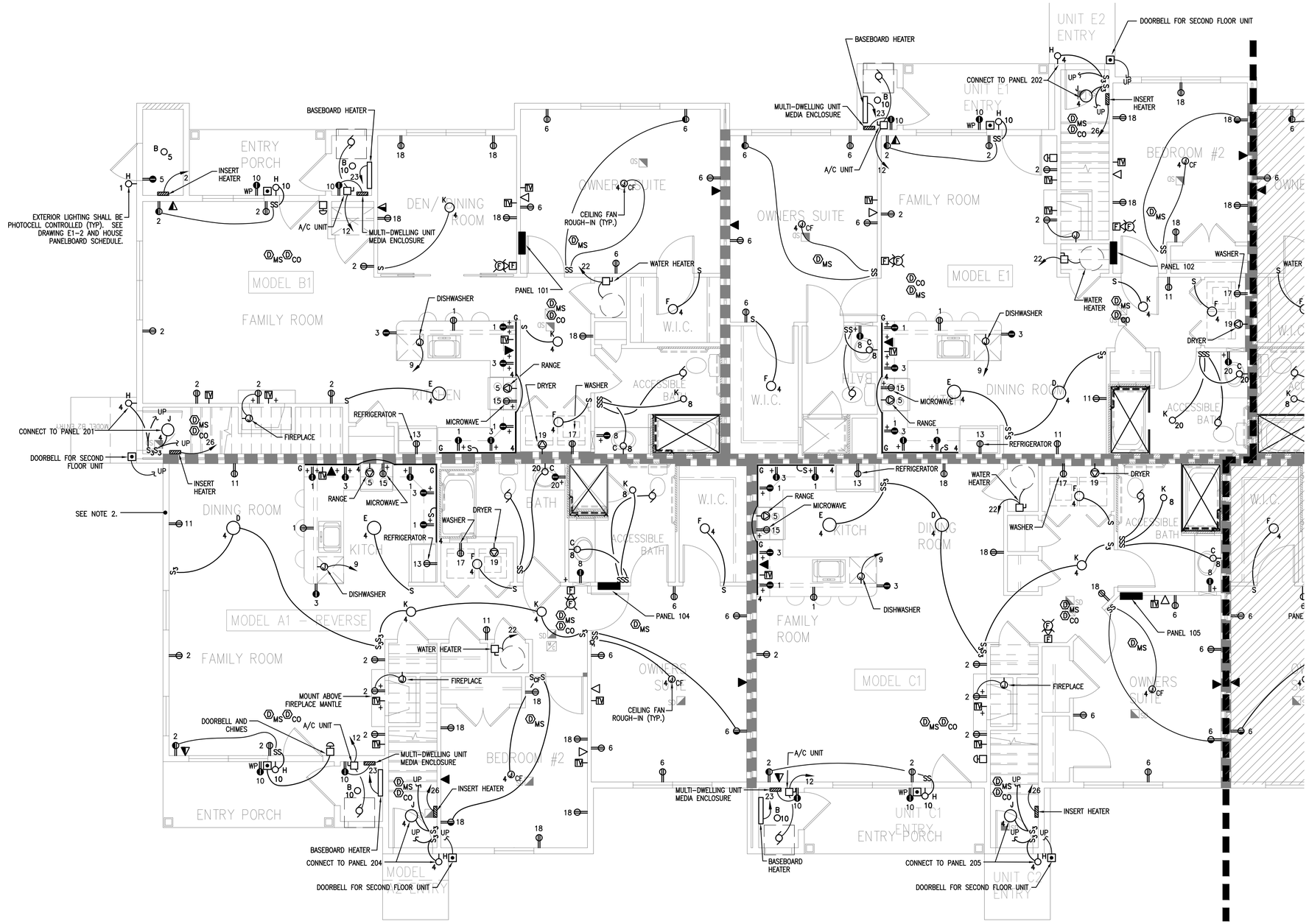

1 / E1-1 TYPE 1 BUILDING – GROUND FLOOR PLAN (WEST)
1/4"=1'-0"

NOTE:

1. EXACT LOCATION OF PHONE, TV, AND DATA OUTLETS TO BE DETERMINED IN THE FIELD PRIOR TO DRYWALL WITH OWNER, CONTRACTOR AND ELECTRICAL CONTRACTOR.

2. PROVIDE #6 AWG COPPER BONDING JUMPER AT EACH CSST GAS PIPE AS IT ENTERS THE BUILDING AT THIS LOCATION. CONNECT BONDING JUMPER TO GROUNDING ELECTRODE CONDUCTOR AT BUILDING ELECTRICAL SERVICE. SEE PLUMBING DRAWINGS FOR EXACT QUANTITIES AND LOCATIONS OF GAS PIPING TO BE BONDED.

hpe GROUP
HVAC • Plumbing • Electrical
905 Castle Hill Lane
Devon, PA 19333
p: 610.296.5628
e: info@hpegroup.com

SEAL

PROJECT

RESIDENCES AT WILLOW RIDGE
BUILDING #10
ALLEN TOWNSHIP, PA
Patriarch Willow Ridge LP
311 N Sumneytown Pike, STE 1A
North Wales, PA 19454

This drawing is provided as an instrument of service by hpeGROUP, LLC to the Client. Use or reference of this drawing by any party (Owner, Contractor, Tenant, Design Professional, etc.) is conditioned by the following. hpeGROUP, LLC relied upon the accuracy of information provided by the Client and other parties to this project in preparation of this drawing. Drawings and specifications herein do not constitute a warranty of construction and/or system performance where operation and maintenance of a system has been negligent. All parties agree to hold hpeGROUP, LLC harmless for claims arising from negligent information provided, negligent construction, negligent operations or negligent maintenance.

REVISION LOG

DRAWING ISSUE:

DATE: 2/16/24
ISSUE: BID/PERMIT ISSUE

PROJECT #: 23-125
SCALE: AS NOTED
DRAWN BY: CAD
CHECKED BY: GJG

DISCIPLINE:
ELECTRICAL

DRAWING TITLE:
TYPE 1 BUILDING GROUND FLOOR PLAN (WEST)

UNITS: A1 REVERSE, B1, C1 AND E1

DRAWING NUMBER:
E1-1

©2024 hpeGROUP, LLC

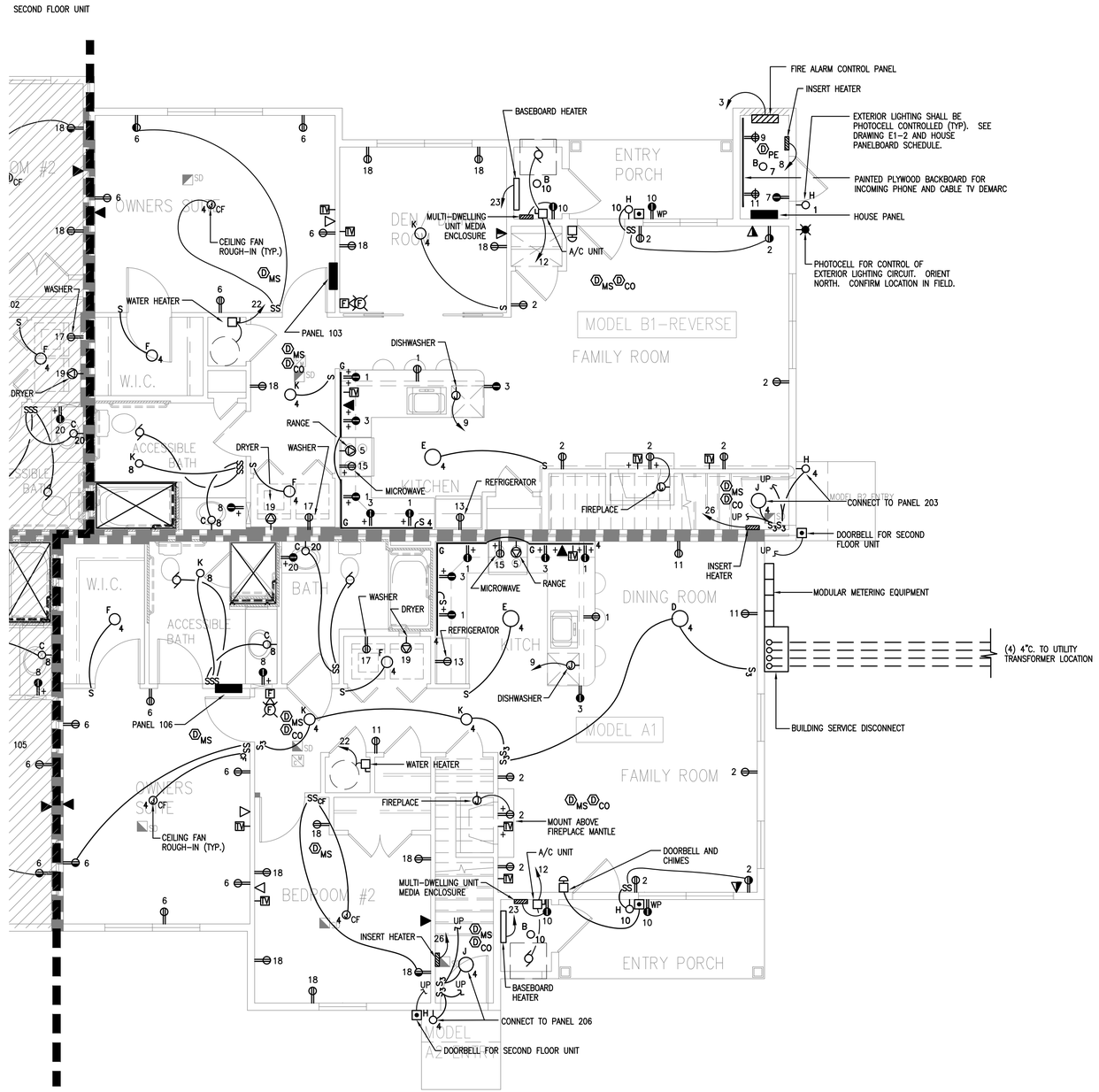

1 E1-2 TYPE 1 BUILDING – GROUND FLOOR PLAN (EAST)
1/4"=1'-0"

NOTE:

1. EXACT LOCATION OF PHONE, TV, AND DATA OUTLETS TO BE DETERMINED IN THE FIELD PRIOR TO DRYWALL WITH OWNER, CONTRACTOR AND ELECTRICAL CONTRACTOR.

hpe GROUP
HVAC • Plumbing • Electrical
905 Castle Hill Lane
Devon, PA 19333
p: 610.296.5628
e: info@hpegroup.com

SEAL

PROJECT

RESIDENCES AT WILLOW RIDGE
BUILDING #10
ALLEN TOWNSHIP, PA
Patriarch Willow Ridge LP
311 N Sumneytown Pike, STE 1A
North Wales, PA 19454

This drawing is provided as an instrument of service by hpeGROUP, LLC to the Client. Use or reference of this drawing by any party (Owner, Contractor, Tenant, Design Professional, etc.) is conditioned by the following. hpeGROUP, LLC relied upon the accuracy of information provided by the Client and other parties to this project in preparation of this drawing. Drawings and specifications herein do not constitute a warranty of construction and/or system performance where operation and maintenance of a system has been negligent. All parties agree to hold hpeGROUP, LLC harmless for claims arising from negligent information provided, negligent construction, negligent operations or negligent maintenance.

REVISION LOG

DRAWING ISSUE:

DATE: 2/16/24
ISSUE: BID/PERMIT ISSUE

PROJECT #: 23-125
SCALE: AS NOTED
DRAWN BY: CAD
CHECKED BY: GJG

DISCIPLINE:
ELECTRICAL

DRAWING TITLE:
TYPE 1 BUILDING GROUND FLOOR PLAN (EAST)

UNITS: A1 AND B1 REVERSE

DRAWING NUMBER:
E1-2

©2024 hpeGROUP, LLC

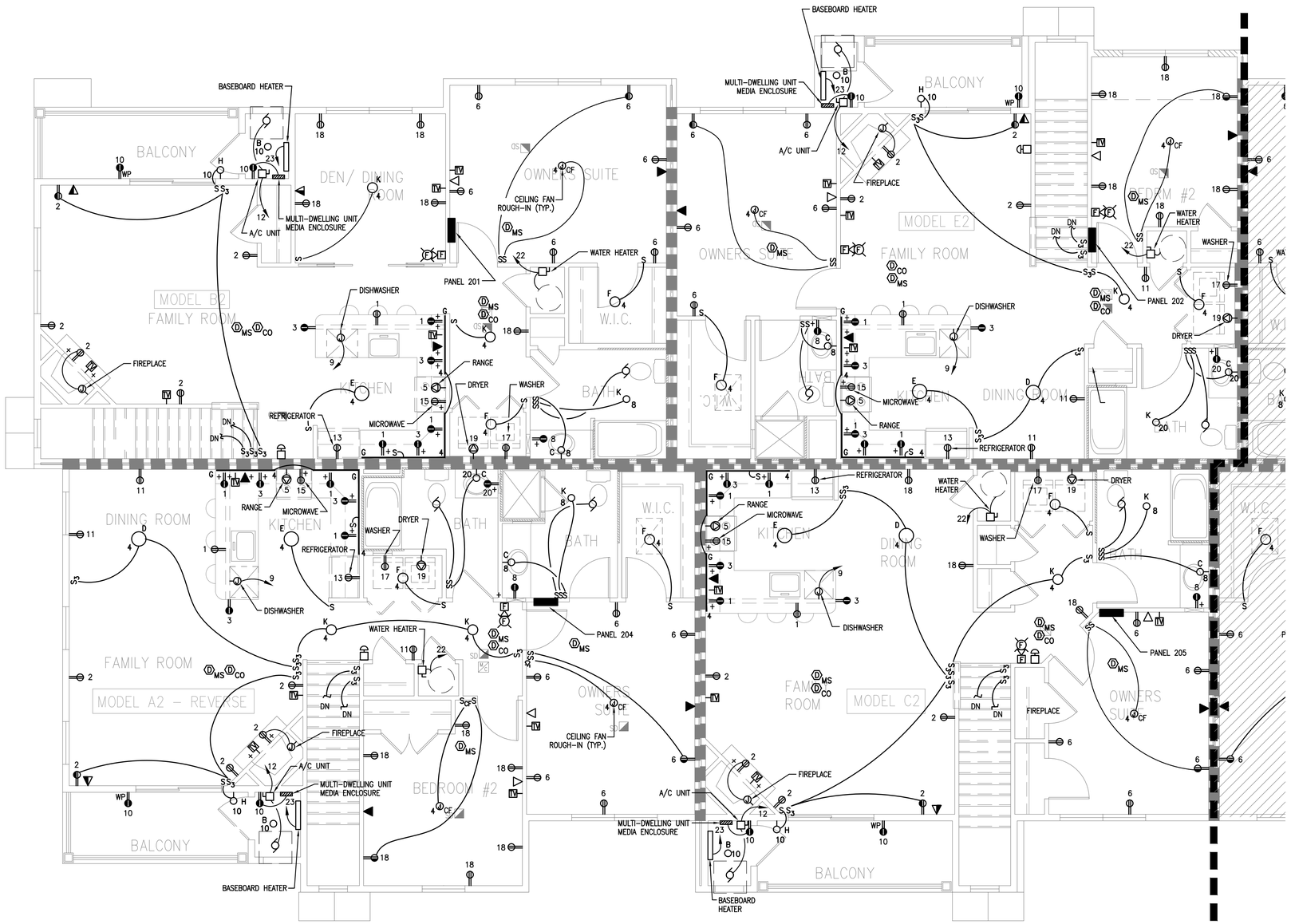

1 TYPE 1 BUILDING – SECOND FLOOR PLAN (WEST)
E1-3 1/4"=1'-0"

NOTE:

1. EXACT LOCATION OF PHONE, TV, AND DATA OUTLETS TO BE DETERMINED IN THE FIELD PRIOR TO DRYWALL WITH OWNER, CONTRACTOR AND ELECTRICAL CONTRACTOR.

hpe GROUP
HVAC • Plumbing • Electrical
905 Castle Hill Lane
Devon, PA 19333
p: 610.296.5628
e: info@hpegroup.com

SEAL

PROJECT

RESIDENCES AT WILLOW RIDGE
BUILDING #10
ALLEN TOWNSHIP, PA
Patriarch Willow Ridge LP
311 N Sumneytown Pike, STE 1A
North Wales, PA 19454

This drawing is provided as an instrument of service by hpeGROUP, LLC to the Client. Use or reference of this drawing by any party (Owner, Contractor, Tenant, Design Professional, etc.) is conditioned by the following. hpeGROUP, LLC relied upon the accuracy of information provided by the Client and other parties to this project in preparation of this drawing. Drawings and specifications herein do not constitute a warranty of construction and/or system performance where operation and maintenance of a system has been negligent. All parties agree to hold hpeGROUP, LLC harmless for claims arising from negligent information provided, negligent construction, negligent operations or negligent maintenance.

REVISION LOG

DRAWING ISSUE:

DATE: 2/16/24
ISSUE: BID/PERMIT ISSUE

PROJECT #: 23-125
SCALE: AS NOTED
DRAWN BY: CAD
CHECKED BY: GJG

DISCIPLINE:
ELECTRICAL

DRAWING TITLE:
TYPE 1 BUILDING SECOND FLOOR PLAN (WEST)

UNITS: A2 REVERSE, B2, C2 AND E2

DRAWING NUMBER:
E1-3

©2024 hpeGROUP, LLC

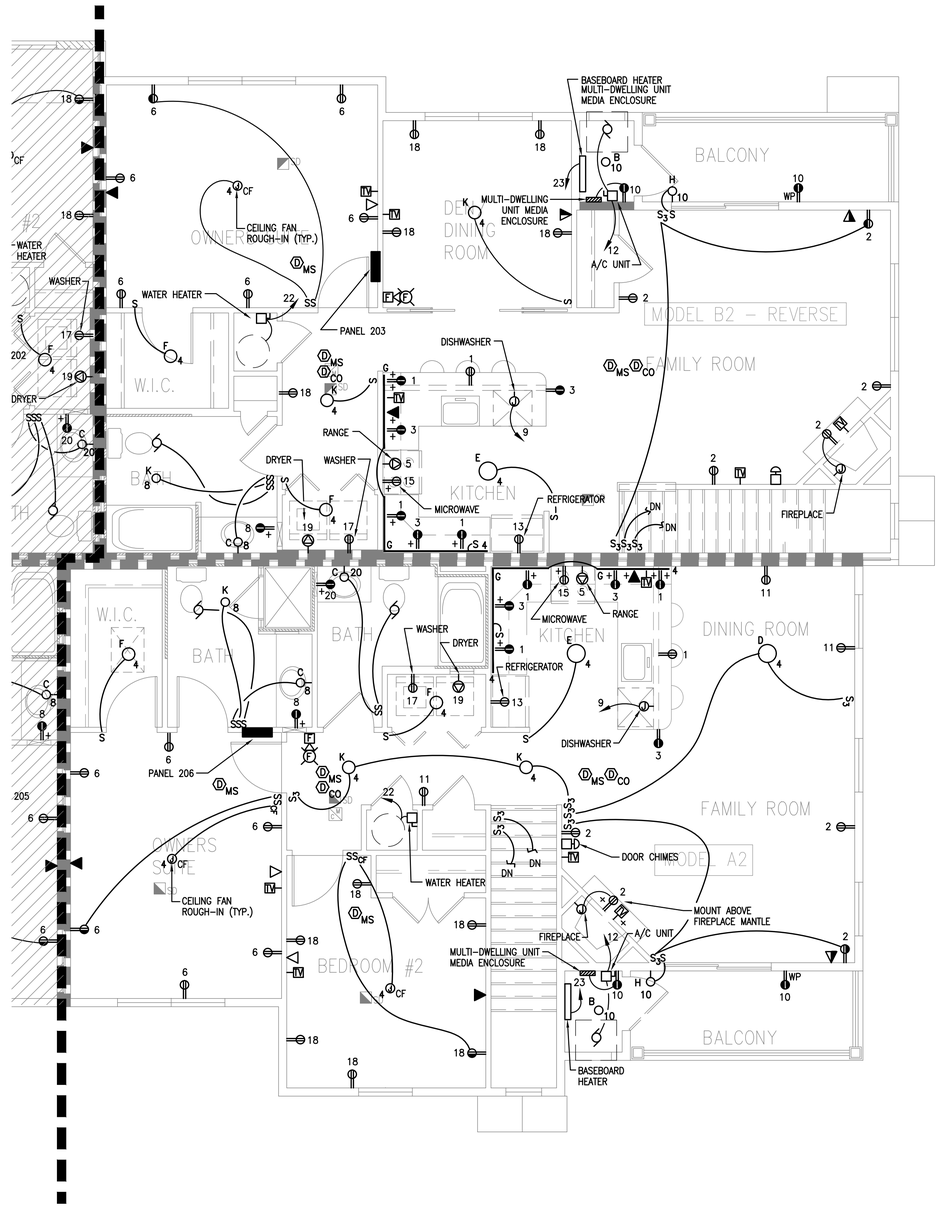

1 E1-4 TYPE 1 BUILDING – SECOND FLOOR PLAN (EAST)
1/4"=1'-0"

NOTE:

1. EXACT LOCATION OF PHONE, TV, AND DATA OUTLETS TO BE DETERMINED IN THE FIELD PRIOR TO DRYWALL WITH OWNER, CONTRACTOR AND ELECTRICAL CONTRACTOR.

hpe GROUP
HVAC • Plumbing • Electrical
905 Castle Hill Lane
Devon, PA 19333
p: 610.296.5628
e: info@hpegroup.com

SEAL

PROJECT

RESIDENCES AT WILLOW RIDGE
BUILDING #10
ALLEN TOWNSHIP, PA
Patriarch Willow Ridge LP
311 N Sumneytown Pike, STE 1A
North Wales, PA 19454

This drawing is provided as an instrument of service by hpeGROUP, LLC to the Client. Use or reference of this drawing by any party (Owner, Contractor, Tenant, Design Professional, etc.) is conditioned by the following. hpeGROUP, LLC relied upon the accuracy of information provided by the Client and other parties to this project in preparation of this drawing. Drawings and specifications herein do not constitute a warranty of construction and/or system performance where operation and maintenance of a system has been negligent. All parties agree to hold hpeGROUP, LLC harmless for claims arising from negligent information provided, negligent construction, negligent operations or negligent maintenance.

REVISION LOG

DRAWING ISSUE:

DATE: 2/16/24
ISSUE: BID/PERMIT ISSUE

PROJECT #: 23-125
SCALE: AS NOTED
DRAWN BY: CAD
CHECKED BY: GJG

DISCIPLINE:
ELECTRICAL

DRAWING TITLE:
TYPE 1 BUILDING SECOND FLOOR PLAN (EAST)

UNITS: A2 AND B2 REVERSE

DRAWING NUMBER:
E1-4

©2024 hpeGROUP, LLC