# INDEX

THIS INDEX SECTION INCLUDES THE FOLLOWING MAJOR GROUPS:
FRONT AXLE FRONT SUSPENSION STEERING

# 1965


| TITLE | SECTION | PAGE | ILLUS. NO. |
|---|---|---|---|
| **A (FORD)** | | | |
| FRONT SUSPENSION - arms, shock absorbers, spindles, springs, stabilizer | 30 | 1 | P-4545 |
| STEERING | | | |
| Manual steering system | | | |
| Steering gear details | 36.1 | 1 | P-4607 |
| Steering linkage | 36 | 1 | P-4579 |
| Power steering system | 36 | 1 | P-4579 |
| Pump details - Ford type | 36.2 | 2 | P-4574 |
| - Eaton type | 36.2 | 1 | P-9579 |
| Steering gear details - Ford type | 36.1 | 2 | P-4577 |
| - Saginaw type | 36.1 | 3 | P-4723 |
| Steering linkage | 36 | 1 | P-4579 |
| Steering column - automatic trans. - column shift - fixed | A72 | 1 | P-4930 |
| - movable | A72 | 2 | P-4931 |
| - floor shift | 35 | 1 | P-5495 |
| - manual trans. - column shift | 72 | 2 | P-4794 |
| - floor shift | 35 | 1 | P-5495 |
| Steering wheel & horn ring | 138 | 1 | P-4864 |
| **B (FAIRLANE)** | | | |
| FRONT SUSPENSION - arms, shock absorbers, spindles, springs, stabilizer | 30 | 2 | P-3675 |
| STEERING | | | |
| Manual steering system | | | |
| Steering gear details | 35 | 2 | P-3724 |
| Steering linkage | 32 | 1 | P-3669 |
| Power steering system | 36 | 2 | P-3773 |
| Control valve details | 36.2 | 5 | P-7454 |
| Cylinder details | 36.2 | 6 | P-4180 |
| Pump details - Ford type | 36.2 | 2 | P-4574 |
| - Eaton type | 36.2 | 1 | P-9579 |
| Steering gear details | 35 | 2 | P-3724 |
| Steering linkage | 36 | 2 | P-3773 |
| Steering column - automatic transmission - column shift | A72 | 3 | P-3713 |
| - floor shift | 35 | 2 | P-3724 |
| - manual transmission - column shift | 72 | 3 | P-3712 |
| - floor shift | 35 | 2 | P-3724 |
| Steering wheel & horn ring | | | |
| **F (MUSTANG)** | | | |
| FRONT SUSPENSION - arms, spindles, springs | 30 | 4 | P-3120 |
| Shock absorbers | 180 | 1 | P-3129 |
| STEERING | | | |
| Manual steering system | | | |
| Steering gear details | 36.1 | 1 | P-3122 |
| Steering linkage - 6 cyl. | 32 | 2 | P-3121 |
| - 8 cyl. | 32 | 3 | P-4483 |
| Power steering system - with Eaton pump | 36 | 4 | P-4139 |
| - 6 cyl. - with Ford pump | 36 | 5 | P-4606 |
| - 8 cyl. - with Ford pump | 36 | 6 | P-4605 |
| Pump details - Ford type | 36.2 | 2 | P-4574 |
| - Eaton type | 36.2 | 1 | P-9579 |
| Steering gear details | 36.1 | 4 | P-3122 |
| Steering linkage - 6 & 8 cyl. - with Eaton pump | 36 | 4 | P-4139 |
| - 6 cyl. - with Ford pump | 36 | 5 | P-4606 |
| - 8 cyl. - with Ford pump | 36 | 6 | P-4605 |
| Steering column | 35 | 4 | P-6366 |
| Steering wheel & horn ring - except GT | 138 | 2 | P-4514 |
| - GT | 138 | 1 | P-4955 |



COPYRIGHT © 1975 — FORD MOTOR COMPANY — DEARBORN, MICHIGAN

## INDEX

# 1965

| TITLE | SECTION | PAGE | ILLUS. NO. |
|---|---|---|---|
| **F (MUSTANG)** - continued | | | |
| Control valve details - 6 cyl. | 36.2 | 5 | P-7454 |
| - 8 cyl. | 36.2 | 4 | P-7453 |
| Cylinder details | 36.2 | 6 | P-4180 |
| **S (THUNDERBIRD)** | | | |
| FRONT SUSPENSION - arms, shock absorbers, spindles, springs, stabilizer | 30 | 5 | P-4400 |
| STEERING | | | |
| Power steering system | 36 | 7 | P-4578 |
| Pump details - Ford type | 36.2 | 2 | P-4574 |
| - Eaton type | 36.2 | 1 | P-9579 |
| Steering gear details | 36.1 | 2 | P-4577 |
| Steering linkage | 36 | 7 | P-4578 |
| Steering column - automatic trans. - column shift - fixed | A72 | 5 | P-3284 |
| - movable | A72 | 6 | P-4224 |
| Steering wheel & horn ring | 138 | 2 | P-4544 |
| **X (FALCON)** | | | |
| FRONT SUSPENSION - arms, spindles, springs | 30 | 4 | P-3120 |
| - shock absorbers | 180 | 1 | P-3129 |
| STEERING | | | |
| Manual steering system | | | |
| Steering gear details | 36.1 | 4 | P-3122 |
| Steering linkage - 6 cyl. | 32 | 2 | P-3121 |
| - 8 cyl. | 32 | 3 | P-4483 |
| Power steering system - 6 cyl. | 36 | 5 | P-4606 |
| - 8 cyl. | 36 | 6 | P-4605 |
| Control valve details - 6 cyl. | 36.2 | 5 | P-7454 |
| - 8 cyl. | 36.2 | 4 | P-7453 |
| Cylinder details | 36.2 | 6 | P-4180 |
| Pump details - Ford type | 36.2 | 2 | P-4574 |
| - Eaton type | 36.2 | 1 | P-9579 |
| Steering gear details | 36.1 | 4 | P-3122 |
| Steering linkage - 6 cyl. | 36 | 5 | P-4606 |
| - 8 cyl. | 36 | 6 | P-4605 |
| Steering column - automatic transmission - column shift | A72 | 7 | P-4601 |
| - floor shift | 35 | 4 | P-6366 |
| - manual transmission - column shift | 72 | 4 | P-4600 |
| - floor shift | 35 | 4 | P-6366 |
| Steering wheel & horn ring | 138 | 1 | P-4864 |

# 1966

| | | | |
|---|---|---|---|
| **A (FORD)** | | | |
| FRONT SUSPENSION - arms, shock absorbers, spindles, springs, stabilizer | 30 | 1 | P-4545 |
| STEERING | | | |
| Manual steering system | | | |
| Steering gear details | 36.1 | 1 | P-4607 |
| Steering linkage | 36 | 1 | P-4579 |
| Power steering system | 36 | 1 | P-4579 |
| Pump details | 36.2 | 2 | P-4574 |
| Steering gear details - Ford type | 36.1 | 2 | P-4577 |
| - Saginaw type | 36.1 | 3 | P-4723 |
| Steering linkage | 36 | 1 | P-4579 |
| Steering column - automatic trans. - column shift - fixed | A72 | 1 | P-4930 |
| - movable | A72 | 2 | P-4931 |
| - floor shift | 35 | 1 | P-5495 |
| - manual trans. - column shift | 72 | 2 | P-4794 |
| - floor shift | 35 | 1 | P-5495 |
| Steering wheel & horn ring | 138 | 1 | P-4864 |

# INDEX


| TITLE | SECTION | PAGE | ILLUS. NO. |
|---|---|---|---|
| **1966** | | | |
| **B (FAIRLANE)** | | | |
| FRONT SUSPENSION - arms, shock absorbers, spindles, springs, stabilizer | 30 | 3 | P-4945 |
| STEERING | | | |
| Manual steering system | | | |
| Steering gear details | 36.1 | 6 | P-9859 |
| Steering linkage | 32 | 1 | P-3669 |
| Power steering system | 36 | 3 | P-4986 |
| Control valve details | 36.2 | 5 | P-7454 |
| Cylinder details | 36.2 | 6 | P-4180 |
| Pump details | 36.2 | 2 | P-4574 |
| Steering gear details | 36.1 | 6 | P-9859 |
| Steering linkage | 36 | 3 | P-4986 |
| Steering column - automatic transmission - column shift | A72 | 4 | P-5001 |
| - floor shift | 35 | 3 | P-5138 |
| - manual transmission - column shift | 72 | 5 | P-5000 |
| - floor shift | 35 | 3 | P-5138 |
| Steering wheel & horn ring - wood grain - 3 spoke | 138 | 1 | P-4955 |
| - exc. wood grain - 2 spoke | 138 | 3 | P-5145 |
| **F (MUSTANG)** | | | |
| FRONT SUSPENSION - arms, shock absorbers, spindles, springs | 30 | 3 | P-4945 |
| STEERING | | | |
| Manual steering system | | | |
| Steering gear details | 36.1 | 6 | P-9859 |
| Steering linkage - 6 cyl. | 32 | 2 | P-3121 |
| - 8 cyl. | 32 | 3 | P-4483 |
| Power steering system - 6 cyl. | 36 | 5 | P-4606 |
| - 8 cyl. | 36 | 6 | P-4605 |
| Control valve details - 6 cyl. | 36.2 | 5 | P-7454 |
| - 8 cyl. | 36.2 | 4 | P-7453 |
| Cylinder details | 36.2 | 6 | P-4180 |
| Pump details | 36.2 | 2 | P-4574 |
| Steering gear details | 36.1 | 6 | P-9859 |
| Steering linkage - 6 cyl. | 32 | 2 | P-3121 |
| - 8 cyl. | 32 | 3 | P-4483 |
| Steering column | 35 | 4 | P-6366 |
| Steering wheel & horn ring - except GT | 138 | 2 | P-4514 |
| - GT | 138 | 1 | P-4955 |
| **S (THUNDERBIRD)** | | | |
| FRONT SUSPENSION - arms, shock absorbers, spindles, springs, stabilizer | 30 | 5 | P-4400 |
| STEERING | | | |
| Power steering system | 36 | 7 | P-4578 |
| Pump details | 36.2 | 2 | P-4574 |
| Steering gear details | 36.1 | 2 | P-4577 |
| Steering linkage | 36 | 7 | P-4578 |
| Steering column - automatic trans. - column shift - fixed | A72 | 5 | P-3284 |
| - movable | A72 | 6 | P-4224 |
| Steering wheel & horn ring | 138 | 2 | P-4544 |



COPYRIGHT © 1975 — FORD MOTOR COMPANY — DEARBORN, MICHIGAN

## INDEX


| TITLE | SECTION | PAGE | ILLUS. NO. |
|---|---|---|---|
| **1966** | | | |
| **U (BRONCO)** | | | |
| FRONT AXLE | 30 | 7 | P-5312 |
| FRONT SUSPENSION - air spring installation | 30 | 12 | P-10676 |
| - spindles | 30 | 7 | P-5312 |
| - springs, arms, shock absorbers | 30 | 6 | P-4938 |
| STEERING | | | |
| Manual steering system | | | |
| Steering gear details | 36.1 | 6 | P-9981 |
| Steering linkage | 30 | 6 | P-4938 |
| Steering column - manual transmission - column shift | 35 | 7 | P-4962 |
| Steering wheel & horn ring | 138 | 3 | P-4953 |
| **X (FALCON)** | | | |
| FRONT SUSPENSION - arms, shock absorbers, spindles, springs, stabilizer | 30 | 3 | P-4945 |
| STEERING | | | |
| Manual steering system | | | |
| Steering gear details | 36.1 | 6 | P-9859 |
| Steering linkage | 32 | 1 | P-3669 |
| Power steering system | 36 | 3 | P-4986 |
| Control valve details | 36.2 | 5 | P-7454 |
| Cylinder details | 36.2 | 6 | P-4180 |
| Pump details | 36.2 | 2 | P-4574 |
| Steering gear details | 36.1 | 6 | P-9859 |
| Steering linkage | 36 | 3 | P-4986 |
| Steering column - automatic transmission - column shift | A72 | 4 | P-5001 |
| - floor shift | 35 | 3 | P-5138 |
| - manual transmission - column shift | 72 | 5 | P-5000 |
| - floor shift | 35 | 3 | P-5138 |
| Steering wheel & horn ring | 138 | 3 | P-5145 |
| **1967** | | | |
| **A (FORD)** | | | |
| FRONT SUSPENSION - arms, shock absorbers, spindles, springs, stabilizer | 30 | 1 | P-4545 |
| STEERING | | | |
| Manual steering system | | | |
| Steering gear details | 36.1 | 1 | P-4607 |
| Steering linkage - 6 cyl. | 36 | 8 | P-5616 |
| - 8 cyl. | 36 | 9 | P-5617 |
| Power steering system - 6 cyl. | 36 | 8 | P-5616 |
| - 8 cyl. | 36 | 9 | P-5617 |
| Pump details | 36.2 | 3 | P-5615 |
| Steering gear details - Ford type | 36.1 | 2 | P-4577 |
| - Saginaw type | 36.1 | 3 | P-4723 |
| Steering linkage - 6 cyl. | 36 | 8 | P-5616 |
| - 8 cyl. | 36 | 9 | P-5617 |
| Steering column - automatic transmission - column shift | A72 | 8 | P-5497 |
| - floor shift | 35 | 1 | P-5495 |
| - manual transmission - column shift | 72 | 7 | P-5496 |
| - floor shift | 35 | 1 | P-5495 |
| Steering wheel & horn ring - except wood grain - 2 spoke | 138 | 4 | P-5744 |
| - wood grain - 3 spoke | 138 | 6 | P-5747 |

# INDEX


| TITLE | SECTION | PAGE | ILLUS. NO. |
|---|---|---|---|
| **1967** | | | |
| **B (FAIRLANE)** | | | |
| FRONT SUSPENSION - arms, shock absorbers, spindles, springs, stabilizer | 30 | 3 | P-4945 |
| STEERING | | | |
| Manual steering system | | | |
| Steering gear details | 36.1 | 6 | P-9859 |
| Steering linkage | 32 | 4 | P-5959 |
| Power steering system | 36 | 3 | P-4986 |
| Control valve details | 36.2 | 5 | P-7454 |
| Cylinder details | 36.2 | 6 | P-4180 |
| Pump details | 36.2 | 3 | P-5615 |
| Steering gear details | 36.1 | 6 | P-9859 |
| Steering linkage | 36 | 3 | P-4986 |
| Steering column - automatic transmission - column shift | A72 | 4 | P-5001 |
| - floor shift | 35 | 3 | P-5138 |
| - manual transmission - column shift | 72 | 5 | P-5000 |
| - floor shift | 35 | 3 | P-5138 |
| Steering wheel & horn ring - except wood grain | 138 | 5 | P-5745 |
| - wood grain | 138 | 6 | P-5747 |
| **F (MUSTANG)** | | | |
| FRONT SUSPENSION - arms, shock absorbers, spindles, springs, stabilizer | 30 | 3 | P-4945 |
| STEERING | | | |
| Manual steering system | | | |
| Steering gear details | 36.1 | 6 | P-9859 |
| Steering linkage | 32 | 4 | P-5959 |
| Power steering system | 36 | 10 | P-5714 |
| Control valve details | 36.2 | 5 | P-7454 |
| Cylinder details | 36.2 | 6 | P-4180 |
| Pump details | 36.2 | 3 | P-5615 |
| Steering gear details | 36.1 | 6 | P-9859 |
| Steering linkage | 36 | 10 | P-5714 |
| Steering column - fixed wheel | 35 | 6 | P-5710 |
| - tilt wheel | 35 | 5 | P-5622 |
| Steering wheel & horn ring - except wood grain | 138 | 5 | P-5746 |
| - wood grain | 138 | 6 | P-5747 |




COPYRIGHT © 1975 — FORD MOTOR COMPANY — DEARBORN, MICHIGAN

## INDEX


| TITLE | SECTION | PAGE | ILLUS. NO. |
|---|---|---|---|
| **1967** | | | |
| **S (THUNDERBIRD)** | | | |
| FRONT SUSPENSION - arms, shock absorbers, spindles, springs, stabilizer | 30 | 1 | P-4545 |
| STEERING | | | |
| Power steering system | 36 | 11 | P-5618 |
| Pump details | 36.2 | 3 | P-5615 |
| Steering gear details | 36.1 | 2 | P-4577 |
| Steering linkage | 36 | 11 | P-5618 |
| Steering column - automatic transmission - column shift | A72 | 9 | P-5493 |
| Steering wheel & horn ring | 138 | 4 | P-5743 |
| **U (BRONCO)** | | | |
| FRONT AXLE | 30 | 7 | P-5312 |
| FRONT SUSPENSION - air spring installation | 30 | 12 | P-10676 |
| - arms, shock absorbers, springs | 30 | 6 | P-4938 |
| - spindles | 30 | 7 | P-5312 |
| STEERING | | | |
| Manual steering system | | | |
| Steering gear details | 36.1 | 6 | P-9981 |
| Steering linkage | 30 | 6 | P-4938 |
| Steering column - manual transmission - column shift | 35 | 7 | P-4962 |
| Steering wheel & horn ring | 138 | 3 | P-4953 |
| **X (FALCON)** | | | |
| FRONT SUSPENSION - arms, shock absorbers, spindles, springs, stabilizer | 30 | 3 | P-4945 |
| STEERING | | | |
| Manual steering system | | | |
| Steering gear details | 36.1 | 6 | P-9859 |
| Steering linkage | 32 | 4 | P-5959 |
| Power steering system | 36 | 3 | P-4986 |
| Control valve details | 36.2 | 5 | P-7454 |
| Cylinder details | 36.2 | 6 | P-4180 |
| Pump details | 36.2 | 3 | P-5615 |
| Steering gear details | 36.1 | 6 | P-9859 |
| Steering linkage | 36 | 3 | P-4986 |
| Steering column - automatic transmission - column shift | A72 | 4 | P-5001 |
| - floor shift | 35 | 3 | P-5138 |
| - manual transmission - column shift | 72 | 5 | P-5000 |
| - floor shift | 35 | 3 | P-5138 |
| Steering wheel & horn ring - except wood grain | 138 | 5 | P-5745 |
| - wood grain | 138 | 6 | P-5747 |
| **1968** | | | |
| **A (FORD)** | | | |
| FRONT SUSPENSION - arms, shock absorbers, spindles, springs, stabilizer | 30 | 1 | P-4545 |
| STEERING | | | |
| Manual steering system | | | |
| Steering gear details | 36.1 | 1 | P-4607 |
| Steering linkage - 6 cyl. | 36 | 8 | P-5616 |
| - 8 cyl. | 36 | 9 | P-5617 |
| Power steering system - 6 cyl. | 36 | 8 | P-5616 |
| - 8 cyl. | 36 | 9 | P-5617 |
| Pump details | 36.2 | 3 | P-5615 |
| Steering gear details - Ford type | 36.1 | 2 | P-4577 |
| - Saginaw type | 36.1 | 3 | P-4723 |
| Steering linkage - 6 cyl. | 36 | 8 | P-5616 |
| - 8 cyl. | 36 | 9 | P-5617 |

## INDEX

# 1968


| TITLE | SECTION | PAGE | ILLUS. NO. |
|---|---|---|---|
| **A (FORD)** - continued | | | |
| Steering column - automatic trans. - column shift - fixed wheel | A72 | 10 | P-6017 |
| - tilt wheel | A72 | 11 | P-5986 |
| - floor shift - fixed wheel | 35 | 8 | P-5984 |
| - tilt wheel | 35 | 9 | P-6016 |
| - manual trans. - column shift | 72 | 8 | P-5985 |
| - floor shift - fixed wheel | 35 | 8 | P-5984 |
| - tilt wheel | 35 | 9 | P-6016 |
| Steering wheel & horn ring | 138 | 7 | P-6025 |
| **B (FAIRLANE/TORINO)** | | | |
| FRONT SUSPENSION - arms, shock absorbers, spindles, springs, stabilizer | 30 | 8 | P-6927 |
| STEERING | | | |
| Manual steering system | | | |
| Steering linkage | 32 | 4 | P-5959 |
| Steering gear details | 36.1 | 6 | P-9859 |
| Power steering system | 36 | 3 | P-4986 |
| Control valve details | 36.2 | 5 | P-7454 |
| Cylinder details | 36.2 | 6 | P-4180 |
| Pump details | 36.2 | 3 | P-5615 |
| Steering gear details | 36.1 | 6 | P-9859 |
| Steering linkage | 36 | 3 | P-4986 |
| Steering column - automatic transmission - column shift | A72 | 14 | P-6020 |
| - floor shift | 35 | 10 | P-6018 |
| - manual transmission - column shift | 72 | 9 | P-6019 |
| - floor shift | 35 | 10 | P-6018 |
| Steering wheel & horn ring | 138 | 7 | P-6025 |
| **F (MUSTANG)** | | | |
| FRONT SUSPENSION - arms, shock absorbers, spindles, springs, stabilizer | 30 | 8 | P-6927 |
| STEERING | | | |
| Manual steering system | | | |
| Steering linkage | 32 | 4 | P-5959 |
| Steering gear details | 36.1 | 6 | P-9859 |
| Power steering system | 36 | 10 | P-5714 |
| Control valve details | 36.2 | 5 | P-7454 |
| Cylinder details | 36.2 | 6 | P-4180 |
| Pump details | 36.2 | 3 | P-5615 |
| Steering gear details | 36.1 | 6 | P-9859 |
| Steering linkage | 36 | 10 | P-5714 |
| Steering column - floor shift - tilt wheel | 35 | 11 | P-5769 |
| - fixed wheel | 35 | 12 | P-5770 |
| Steering wheel & horn ring | 138 | 7 | P-6025 |
| **S (THUNDERBIRD)** | | | |
| FRONT SUSPENSION - arms, shock absorbers, spindles, springs, stabilizer | 30 | 1 | P-4545 |
| STEERING | | | |
| Power steering system | 36 | 11 | P-5618 |
| Pump details | 36.2 | 3 | P-5615 |
| Steering gear details | 36.1 | 2 | P-4577 |
| Steering linkage | 36 | 11 | P-5618 |
| Steering column - automatic transmission - column shift - fixed | A72 | 15 | P-6021 |
| - tilt | A72 | 16 | P-6022 |
| Steering wheel & horn ring - except with speed control | 138 | 7 | P-6025 |
| - with speed control | 97.1 | 16 | P-6211 |




COPYRIGHT © 1975 — FORD MOTOR COMPANY — DEARBORN, MICHIGAN

## INDEX


| TITLE | SECTION | PAGE | ILLUS. NO. |
|---|---|---|---|
| **1968** | | | |
| **U (BRONCO)** | | | |
| FRONT AXLE | 30 | 7 | P-5312 |
| FRONT SUSPENSION - air spring installation | 30 | 12 | P-10676 |
| - arms, shock absorbers, springs | 30 | 6 | P-4938 |
| - spindles | 30 | 7 | P-5312 |
| STEERING | | | |
| Manual steering system | | | |
| Steering gear details | 36.1 | 6 | P-9981 |
| Steering linkage | 30 | 6 | P-4938 |
| Steering column - manual transmission - column shift | 35 | 7 | P-4962 |
| Steering shock absorber installation | 35 | 7 | P-4962 |
| Steering wheel & horn ring | 138 | 3 | P-4953 |
| **X (FALCON)** | | | |
| FRONT SUSPENSION - arms, shock absorbers, spindles, springs, stabilizer | 30 | 8 | P-6927 |
| STEERING | | | |
| Manual steering system | | | |
| Steering gear details | 36.1 | 6 | P-9859 |
| Steering linkage | 32 | 4 | P-5959 |
| Power steering system | 36 | 3 | P-4986 |
| Control valve details | 36.2 | 5 | P-7454 |
| Cylinder details | 36.2 | 6 | P-4180 |
| Pump details | 36.2 | 3 | P-5615 |
| Steering gear details | 36.1 | 6 | P-9859 |
| Steering linkage | 36 | 3 | P-4986 |
| Steering column - automatic transmission - column shift | A72 | 14 | P-6020 |
| - floor shift | 35 | 10 | P-6018 |
| - manual transmission - column shift | 72 | 9 | P-6019 |
| - floor shift | 35 | 10 | P-6018 |
| Steering wheel & horn ring | 138 | 7 | P-6025 |
| **1969** | | | |
| **A (FORD)** | | | |
| FRONT SUSPENSION - arms, shock absorbers, spindles, springs stabilizer | 30 | 1 | P-4545 |
| STEERING | | | |
| Manual steering system | | | |
| Steering linkage - 6 cyl. | 36 | 8 | P-5616 |
| - 8 cyl. | 36 | 9 | P-5617 |
| Steering gear details | 36.1 | 1 | P-4607 |
| Power steering system - 6 cyl. | 36 | 8 | P-5616 |
| - 8 cyl. | 36 | 9 | P-5617 |
| Pump details | 36.2 | 3 | P-5615 |
| Steering gear details - Ford type | 36.1 | 2 | P-4577 |
| - Saginaw type | 36.1 | 3 | P-4723 |
| Steering linkage - 6 cyl. | 36 | 8 | P-5616 |
| - 8 cyl. | 36 | 9 | P-5617 |
| Steering column - automatic trans. - column shift - fixed wheel | A72 | 12 | P-6783 |
| - tilt wheel | A72 | 13 | P-6784 |
| - floor shift - fixed wheel | 35 | 13 | P-6786 |
| - tilt wheel | 35 | 14 | P-6787 |
| - manual trans. - column shift | 72 | 10 | P-6785 |
| - floor shift - fixed wheel | 35 | 13 | P-6786 |
| - tilt wheel | 35 | 14 | P-6787 |
| Steering wheel & horn ring - 2 spoke - w/o speed control | 138 | 7 | P-6025 |
| - w/ speed control | 97.1 | 18 | P-6686 |
| - 3 spoke (rim blow) | 138 | 7 | P-6823 |

# INDEX


| TITLE | SECTION | PAGE | ILLUS. NO. |
|---|---|---|---|
| **1969** | | | |
| **B (FAIRLANE/TORINO)** | | | |
| FRONT SUSPENSION - arms, shock absorbers, spindles, springs, stabilizer | 30 | 8 | P-6927 |
| STEERING | | | |
| Manual steering system | | | |
| Steering gear details | 36.1 | 6 | P-9859 |
| Steering linkage | 32 | 4 | P-5959 |
| Power steering system | | | |
| Control valve details | 36.2 | 5 | P-7454 |
| Cylinder details | 36.2 | 6 | P-4180 |
| Pump details | 36.2 | 3 | P-5615 |
| Pump installation - 6 cyl. | 36.4 | 4 | P-6946 |
| - 8 cyl. | 36.4 | 5 | P-6947 |
| Steering gear details | 36.1 | 6 | P-9859 |
| Steering linkage | 36.3 | 2 | P-6906 |
| Steering column - automatic transmission - column shift | A72 | 14 | P-6020 |
| - floor shift | 35 | 10 | P-6018 |
| - manual transmission - column shift | 72 | 9 | P-6019 |
| - floor shift | 35 | 10 | P-6018 |
| Steering wheel & horn ring - 2 spoke | 138 | 7 | P-6025 |
| - 3 spoke (rim blow) | 138 | 7 | P-6823 |
| **F (MUSTANG)** | | | |
| FRONT SUSPENSION - arms, shock absorbers, spindles, springs, stabilizer | 30 | 8 | P-6927 |
| STEERING | | | |
| Manual steering system | | | |
| Steering gear details | 36.1 | 6 | P-9859 |
| Steering linkage | 32 | 4 | P-5959 |
| Power steering system | | | |
| Control valve details | 36.2 | 5 | P-7454 |
| Cylinder details | 36.2 | 6 | P-4180 |
| Pump details | 36.2 | 3 | P-5615 |
| Pump installation - 6 cyl. | 36.4 | 4 | P-6946 |
| - 8 cyl. | 36.4 | 5 | P-6947 |
| Steering gear details | 36.1 | 6 | P-9859 |
| Steering linkage | 36.3 | 2 | P-6906 |
| Steering column - floor shift - fixed | 35 | 15 | P-6781 |
| - tilt | 35 | 16 | P-6782 |
| Steering wheel & horn ring - 2 spoke | 138 | 7 | P-6025 |
| - 3 spoke (rim blow) | 138 | 7 | P-6823 |
| **S (THUNDERBIRD)** | | | |
| FRONT SUSPENSION - arms, shock absorbers, spindles, springs, stabilizer | 30 | 1 | P-4545 |
| STEERING | | | |
| Power steering system | 36 | 11 | P-5618 |
| Pump details | 36.2 | 3 | P-5615 |
| Steering gear details | 36.1 | 2 | P-4577 |
| Steering linkage | 36 | 11 | P-5618 |
| Steering column - automatic transmission - column shift - fixed | A72 | 15 | P-6021 |
| - tilt | A72 | 16 | P-6022 |
| Steering wheel & horn ring - 2 spoke - w/o speed control | 138 | 7 | P-6025 |
| - w/ speed control | 97.1 | 16 | P-6211 |
| - 3 spoke (rim blow) | 138 | 7 | P-6823 |



COPYRIGHT © 1975 — FORD MOTOR COMPANY — DEARBORN, MICHIGAN

## INDEX


| TITLE | SECTION | PAGE | ILLUS. NO. |
|---|---|---|---|
| **1969** | | | |
| **U (BRONCO)** | | | |
| FRONT AXLE | 30 | 7 | P-5312 |
| FRONT SUSPENSION - air spring installation | 30 | 12 | P-10676 |
| - arms, shock absorbers, springs | 30 | 6 | P-4938 |
| - spindles | 30 | 7 | P-5312 |
| STEERING | | | |
| Manual steering system | | | |
| Steering gear details | 36.1 | 6 | P-9981 |
| Steering linkage | 30 | 6 | P-4938 |
| Steering column - manual transmission - column shift | 35 | 7 | P-4962 |
| Steering shock absorber installation | 35 | 7 | P-4962 |
| Steering wheel & horn ring | 138 | 3 | P-4953 |
| **X (FALCON)** | | | |
| FRONT SUSPENSION - arms, shock absorbers, spindles, springs, stabilizer | 30 | 8 | P-6927 |
| STEERING | | | |
| Manual steering system | | | |
| Steering gear details | 36.1 | 6 | P-9859 |
| Steering linkage | 32 | 4 | P-5959 |
| Power steering system | | | |
| Control valve details | 36.2 | 5 | P-7454 |
| Cylinder details | 36.2 | 6 | P-4180 |
| Pump details | 36.2 | 3 | P-5615 |
| Pump installation - 6 cyl. | 36.4 | 4 | P-6946 |
| - 8 cyl. | 36.4 | 5 | P-6947 |
| Steering linkage | 36.3 | 2 | P-6906 |
| Steering gear details | 36.1 | 6 | P-9859 |
| Steering column - automatic transmission - column shift | A72 | 14 | P-6020 |
| - floor shift | 35 | 10 | P-6018 |
| - manual transmission - column shift | 72 | 9 | P-6019 |
| - floor shift | 35 | 10 | P-6018 |
| Steering wheel & horn ring - 2 spoke | 138 | 7 | P-6025 |
| - 3 spoke (rim blow) | 138 | 7 | P-6823 |
| **1970** | | | |
| **A (FORD)** | | | |
| FRONT SUSPENSION - arms, shock absorbers, spindles, springs, stabilizer | 30 | 1 | P-4545 |
| STEERING | | | |
| Manual steering system | | | |
| Steering gear details | 36.1 | 1 | P-4607 |
| Steering linkage | 36.3 | 1 | P-7362 |
| Power steering system | | | |
| Pump details | 36.2 | 3 | P-5615 |
| Pump installation - 6 cyl. 240 | 36.4 | 1 | P-7364 |
| - 8 cyl. 302,351 | 36.4 | 9 | P-7366 |
| - 8 cyl. 390,428 | 36.4 | 2 | P-7367 |
| - 8 cyl. 429 | 36.4 | 3 | P-7369 |
| Steering gear details | 36.1 | 2 | P-4577 |
| Steering linkage | 36.3 | 1 | P-7362 |

# INDEX


| TITLE | SECTION | PAGE | ILLUS. NO. |
|---|---|---|---|
| **1970** | | | |
| **A (FORD)** | | | |
| STEERING - continued | | | |
| Steering column - automatic trans. - column shift - fixed wheel | A72 | 18 | P-7220 |
| - tilt wheel | A72 | 19 | P-7241 |
| - floor shift - fixed wheel | 35 | 17 | P-7243 |
| - tilt wheel | 35 | 18 | P-7242 |
| - manual trans. - column shift | 72 | 12 | P-7244 |
| - floor shift - fixed wheel | 35 | 17 | P-7243 |
| - tilt wheel | 35 | 18 | P-7242 |
| Steering wheel - 2 spoke - w/o speed control | 138 | 8 | P-7513 |
| - w/speed control | 97.1 | 18 | P-6686 |
| - 3 spoke | 138 | 8 | P-7514 |
| **B (FAIRLANE/TORINO)** | | | |
| **B (FALCON) - FROM 1/2/70** | | | |
| FRONT SUSPENSION-arms, shock absorbers, spindles, springs, stabilizer | 30 | 8 | P-6927 |
| STEERING | | | |
| Manual steering system | | | |
| Steering gear details | 36.1 | 6 | P-9859 |
| Steering linkage | 32 | 4 | P-5959 |
| Power steering system | | | |
| Control valve details | 36.2 | 5 | P-7454 |
| Cylinder details | 36.2 | 6 | P-4180 |
| Pump details | 36.2 | 3 | P-5615 |
| Pump installation - 6 cyl. | 36.4 | 4 | P-6946 |
| - 8 cyl. 302,351 | 36.4 | 6 | P-7365 |
| - 8 cyl. 429 | 36.4 | 7 | P-7368 |
| Steering gear details | 36.1 | 6 | P-9859 |
| Steering linkage | 36.3 | 2 | P-6906 |
| Steering column - automatic transmission - column shift | A72 | 20 | P-7249 |
| - floor shift | 35 | 19 | P-7248 |
| - manual transmission - column shift | 72 | 13 | P-7247 |
| - floor shift | 35 | 19 | P-7248 |
| Steering wheel - 2 spoke | 138 | 8 | P-7513 |
| - 3 spoke-rim blow-with cover | 138 | 8 | P-7514 |
| - 3 spoke-rim blow-w/o cover | 138 | 9 | P-10685 |
| **F (MUSTANG)** | | | |
| FRONT SUSPENSION-arms, shock absorbers, spindles, springs, stabilizer | 30 | 8 | P-6927 |
| STEERING | | | |
| Manual steering system | | | |
| Steering gear details | 36.1 | 6 | P-9859 |
| Steering linkage | 32 | 4 | P-5959 |
| Power steering system | | | |
| Control valve details | 36.2 | 5 | P-7454 |
| Cylinder details | 36.2 | 6 | P-4180 |
| Pump details | 36.2 | 3 | P-5615 |
| Pump installation - 6 cyl. | 36.4 | 4 | P-6946 |
| - 8 cyl. 302,351 | 36.4 | 6 | P-7365 |
| - 8 cyl. 428 | 36.4 | 5 | P-6947 |
| Steering gear details | 36.1 | 6 | P-9859 |
| Steering linkage | 36.3 | 2 | P-6906 |
| Steering column - floor shift - fixed wheel | 35 | 20 | P-7245 |
| - tilt wheel | 35 | 21 | P-7246 |
| Steering wheel - 2 spoke | 138 | 8 | P-7513 |
| - 3 spoke-rim blow-with cover | 138 | 8 | P-7514 |
| - 3 spoke-rim blow-w/o cover | 138 | 9 | P-10685 |



COPYRIGHT © 1975 — FORD MOTOR COMPANY — DEARBORN, MICHIGAN

# INDEX


| TITLE | SECTION | PAGE | ILLUS. NO. |
|---|---|---|---|
| **1970** | | | |
| **P (MAVERICK)** | | | |
| FRONT SUSPENSION-arms, shock absorbers, spindles, springs, stabilizer | 30 | 8 | P-6927 |
| STEERING | | | |
| Manual steering system | | | |
| Steering gear details | 36.1 | 6 | P-9859 |
| Steering linkage | 32 | 5 | P-6929 |
| Power steering system | | | |
| Control valve details | 36.2 | 5 | P-7454 |
| Cylinder details | 36.2 | 6 | P-4180 |
| Pump details | 36.2 | 3 | P-5615 |
| Pump installation -6 cyl.170,200 | 36.4 | 8 | P-6957 |
| -6 cyl.250 | 36.4 | 4 | P-6946 |
| Steering gear details | 36.1 | 6 | P-9859 |
| Steering linkage | 36.3 | 3 | P-6958 |
| Steering column - automatic transmission - non-locking | A72 | 17 | P-6967 |
| - locking | A72 | 23 | P-7747 |
| - manual transmission - non-locking | 72 | 11 | P-6968 |
| - locking | 72 | 14 | P-7748 |
| Steering wheel & horn ring (without locking steering column) | 138 | 7 | P-6025 |
| Steering wheel & horn ring (with locking steering column) | | | |
| - 2 spoke | 138 | 8 | P-7513 |
| - 3 spoke | 138 | 8 | P-7514 |
| **S (THUNDERBIRD)** | | | |
| FRONT SUSPENSION - arms, shock absorbers, spindles, springs, stabilizer | 30 | 1 | P-4545 |
| STEERING | | | |
| Power steering system | | | |
| Pump details | 36.2 | 3 | P-5615 |
| Pump installation | 36.4 | 3 | P-7369 |
| Steering gear details | 36.1 | 2 | P-4577 |
| Steering linkage | 36.3 | 1 | P-7362 |
| Steering column - automatic transmission - fixed | A72 | 21 | P-7219 |
| - tilt | A72 | 22 | P-7218 |
| Steering wheel - 2 spoke - w/o speed control | 138 | 8 | P-7513 |
| - w/speed control | 97.1 | 22 | P-7698 |
| - 3 spoke | 138 | 8 | P-7514 |
| **U (BRONCO)** | | | |
| FRONT AXLE | 30 | 7 | P-5312 |
| FRONT SUSPENSION - air spring installation | 30 | 12 | P-10676 |
| - arms, shock absorbers, springs | 30 | 6 | P-4938 |
| - spindles | 30 | 7 | P-5312 |
| STEERING | | | |
| Manual steering system | | | |
| Steering gear details | 36.1 | 6 | P-9981 |
| Steering linkage | 30 | 6 | P-4938 |
| Steering column - manual transmission - column shift | 35 | 7 | P-4962 |
| Steering shock absorber installation | 35 | 7 | P-4962 |
| Steering wheel & horn ring | 138 | 3 | P-4953 |

## INDEX


| TITLE | SECTION | PAGE | ILLUS. NO. |
|---|---|---|---|
| **1970** | | | |
| **X (FALCON) - BEFORE 1/2/70 FOR UNITS BUILT FROM 1/2/70 REFER TO B (FALCON)** | | | |
| FRONT SUSPENSION - arms, shock absorbers, spindles, springs, stabilizer | 30 | 8 | P-6927 |
| STEERING | | | |
| Manual steering system | | | |
| Steering gear details | 36.1 | 6 | P-9859 |
| Steering linkage | 32 | 4 | P-5959 |
| Power steering system | | | |
| Control valve details | 36.2 | 5 | P-7454 |
| Cylinder details | 36.2 | 6 | P-4180 |
| Pump details | 36.2 | 3 | P-5615 |
| Pump installation - 6 cyl. | 36.4 | 4 | P-6946 |
| - 8 cyl. | 36.4 | 6 | P-6947 |
| Steering gear details | 36.1 | 6 | P-9859 |
| Steering linkage | 36.3 | 2 | P-6906 |
| Steering column - automatic transmission | A72 | 14 | P-6020 |
| - manual transmission | 72 | 9 | P-6019 |
| Steering wheel & horn ring - 2 spoke | 138 | 7 | P-6025 |
| - 3 spoke (rim blow) | 138 | 7 | P-6823 |
| **1971** | | | |
| **A (FORD)** | | | |
| FRONT SUSPENSION - arms, shock absorbers, spindles, springs, stabilizer | 30 | 1 | P-4545 |
| STEERING | | | |
| Manual steering system | | | |
| Steering gear details | 36.1 | 1 | P-4607 |
| Steering linkage | 36.3 | 1 | P-7362 |
| Power steering system | | | |
| Pump details | 36.2 | 3 | P-5615 |
| Pump installation - 6 cyl. 240 | 36.4 | 1 | P-7364 |
| - 8 cyl. 302 | 36.4 | 9 | P-7366 |
| - 8 cyl. 390 | 36.4 | 2 | P-7367 |
| - 8 cyl. 351,400,429 | 36.4 | 3 | P-7369 |
| Steering gear details | 36.1 | 2 | P-4577 |
| Steering linkage | 36.3 | 1 | P-7362 |
| Steering column - automatic trans. - column shift - fixed wheel | A72 | 18 | P-7220 |
| - tilt wheel | A72 | 19 | P-7241 |
| - floor shift - fixed wheel | 35 | 17 | P-7243 |
| - tilt wheel | 35 | 18 | P-7242 |
| - manual trans. - column shift | 72 | 12 | P-7244 |
| - floor shift - fixed wheel | 35 | 17 | P-7243 |
| - tilt wheel | 35 | 18 | P-7242 |
| Steering wheel - 2 spoke - w/o speed control | 138 | 8 | P-7513 |
| - w/speed control | 97.1 | 24 | P-8310 |
| - 3 spoke - rim blow | 138 | 8 | P-7514 |
| **B (TORINO)** | | | |
| FRONT SUSPENSION - arms, shock absorbers, spindles, springs, stabilizer | 30 | 8 | P-6927 |
| STEERING | | | |
| Manual steering system | | | |
| Steering gear details | 36.1 | 6 | P-9859 |
| Steering linkage | 32 | 4 | P-5959 |



COPYRIGHT © 1975 — FORD MOTOR COMPANY — DEARBORN, MICHIGAN

## INDEX

# 1971

### B (TORINO)


| TITLE | SECTION | PAGE | ILLUS. NO. |
|---|---|---|---|
| STEERING - continued | | | |
| Power steering system | | | |
| Control valve details | 36.2 | 5 | P-7454 |
| Cylinder details | 36.2 | 6 | P-4180 |
| Pump details | 36.2 | 3 | P-5615 |
| Pump installation - 6 cyl. | 36.4 | 4 | P-6946 |
| - 8 cyl. 302, 351 | 36.4 | 6 | P-7365 |
| - 8 cyl. 429 | 36.4 | 7 | P-7368 |
| Steering gear details | 36.1 | 6 | P-9859 |
| Steering linkage | 36.3 | 2 | P-6906 |
| Steering column - automatic transmission - column shift | A72 | 20 | P-7249 |
| - floor shift | 35 | 19 | P-7248 |
| - manual transmission - column shift | 72 | 13 | P-7247 |
| - floor shift | 35 | 19 | P-7248 |
| Steering wheel - 2 spoke - pad blow | 138 | 8 | P-7513 |
| - 3 spoke - rim blow - with cover | 138 | 8 | P-7514 |
| - 3 spoke - rim blow - w/o cover | 138 | 9 | P-10685 |


### F (MUSTANG)


| | | | |
|---|---|---|---|
| FRONT SUSPENSION - arms, shock absorbers, spindles, springs, stabilizer | 30 | 8 | P-6927 |
| STEERING | | | |
| Manual steering system | | | |
| Steering gear details | 36.1 | 6 | P-9859 |
| Steering linkage | 36.3 | 4 | P-8121 |
| Power steering system | | | |
| Pump details | 36.2 | 3 | P-5615 |
| Pump installation - 6 cyl. 250 | 36.4 | 1 | P-7364 |
| - 8 cyl. 302, 351 | 36.4 | 10 | P-8119 |
| - 8 cyl. 429 | 36.4 | 11 | P-8120 |
| Steering gear details | 36.1 | 3 | P-4723 |
| Steering linkage | 36.3 | 4 | P-8121 |
| Steering column - floor shift - fixed wheel | 35 | 20 | P-7245 |
| - tilt wheel | 35 | 21 | P-7246 |
| Steering wheel - 2 spoke - pad blow | 138 | 8 | P-7513 |
| - 2 spoke - button blow | 138 | 9 | P-8307 |
| - 3 spoke - rim blow - with cover | 138 | 8 | P-7514 |
| - 3 spoke - rim blow - w/o cover | 138 | 9 | P-10685 |


### L (PINTO)


| | | | |
|---|---|---|---|
| FRONT SUSPENSION - arms, shock absorbers, spindles, springs, stabilzer | 30 | 9 | P-7936 |
| STEERING | | | |
| Manual steering system | | | |
| Steering gear details & linkage | 36.1 | 5 | P-7966 |
| Steering column | 35 | 22 | P-7961 |
| Steering wheel - 2 spoke wheel - button blow | 138 | 9 | P-8309 |
| - 2 spoke wheel - pad blow | 138 | 8 | P-7513 |

## INDEX

# 1971

### P (MAVERICK)


| TITLE | SECTION | PAGE | ILLUS. NO. |
|---|---|---|---|
| FRONT SUSPENSION - arms, shock absorbers, spindles, springs, stabilizer | 30 | 8 | P-6927 |
| STEERING | | | |
| Manual steering system | | | |
| Steering gear details | 36.1 | 6 | P-9859 |
| Steering linkage | 32 | 5 | P-6929 |
| Power steering system | | | |
| Control valve details | 36.2 | 5 | P-7454 |
| Cylinder details | 36.2 | 6 | P-4180 |
| Pump details | 36.2 | 3 | P-5615 |
| Pump installation - 6 cyl.170,200 | 36.4 | 8 | P-6957 |
| - 6 cyl.250 | 36.4 | 4 | P-6946 |
| - 8 cyl.302 | 36.4 | 8 | P-6957 |
| Steering linkage | 36.3 | 3 | P-6958 |
| Steering column - automatic transmission - column shift | A72 | 23 | P-7747 |
| - floor shift | 35 | 23 | P-8323 |
| - manual transmission | 72 | 13 | P-7748 |
| Steering wheel - 2 spoke - pad blow | 138 | 8 | P-7513 |
| - 2 spoke - button blow | 138 | 9 | P-8309 |
| - 3 spoke - rim blow | 138 | 8 | P-7514 |


### S (THUNDERBIRD)


| TITLE | SECTION | PAGE | ILLUS. NO. |
|---|---|---|---|
| FRONT SUSPENSION - arms, shock absorbers, spindles, springs, stabilizer | 30 | 1 | P-4545 |
| STEERING | | | |
| Power steering system | | | |
| Pump details | 36.2 | 3 | P-5615 |
| Pump installation | 36.4 | 3 | P-7369 |
| Steering gear details | 36.1 | 2 | P-4577 |
| Steering linkage | 36.3 | 1 | P-7362 |
| Steering column - automatic transmission - fixed | A72 | 21 | P-7219 |
| - tilt | A72 | 22 | P-7218 |
| Steering wheel - 2 spoke - w/o speed control | 138 | 8 | P-7513 |
| - w/ speed control | 97.1 | 22 | P-7698 |
| - 3 spoke - rim blow | 138 | 8 | P-7514 |


### U (BRONCO)


| TITLE | SECTION | PAGE | ILLUS. NO. |
|---|---|---|---|
| FRONT AXLE ("Before Serial No. K20,001") | 30 | 7 | P-5312 |
| ("From Serial No. K20,001") | 30 | 10 | P-8317 |
| FRONT SUSPENSION - air spring installation | 30 | 12 | P-10676 |
| - arms, shock absorbers, springs | 30 | 6 | P-4938 |
| - spindles ("Before Serial No. K20,001") | 30 | 7 | P-5312 |
| - spindles ("From Serial No. K20,001") | 30 | 10 | P-8317 |
| STEERING | | | |
| Manual steering system | | | |
| Steering gear details | 36.1 | 6 | P-9981 |
| Steering linkage | 30 | 6 | P-4938 |
| Steering column - manual transmission - column shift | 35 | 7 | P-4962 |
| Steering shock absorber installation | 35 | 7 | P-4962 |
| Steering wheel & horn ring | 138 | 3 | P-4953 |



COPYRIGHT © 1975 — FORD MOTOR COMPANY — DEARBORN, MICHIGAN

## INDEX

# 1972

### A (FORD)


| TITLE | SECTION | PAGE | ILLUS. NO. |
|---|---|---|---|
| FRONT SUSPENSION - arms, shock absorbers, spindles, springs, stabilizers | 30 | 11 | P-8639 |
| STEERING | | | |
| Manual steering system | | | |
| Steering gear details | 36.1 | 1 | P-4607 |
| Steering linkage | 36.3 | 1 | P-7362 |
| Power steering system | | | |
| Steering gear details | 36.1 | 2 | P-4577 |
| Steering linkage | 36.3 | 1 | P-7362 |
| Pump details | 36.2 | 3 | P-5615 |
| Pump installation - 6 cyl. 240 | 36.4 | 1 | P-7364 |
| - 8 cyl. 302 | 36.4 | 9 | P-7366 |
| - 8 cyl. 351,400,429 | 36.4 | 3 | P-7369 |
| Steering column - automatic trans. - column shift - fixed wheel | A72 | 18 | P-7220 |
| - tilt wheel | A72 | 19 | P-7241 |
| Steering wheel - 2 spoke - w/o speed control | 138 | 8 | P-7513 |
| - 2 spoke - w/speed control | 97.1 | 24 | P-8310 |
| - 3 spoke - rim blow | 138 | 8 | P-7514 |


### B (TORINO)


| | | | |
|---|---|---|---|
| FRONT SUSPENSION - arms, shock absorbers, spindles, springs, stabilizers | 30 | 11 | P-8639 |
| STEERING | | | |
| Manual steering system | | | |
| Steering gear details | 36.1 | 1 | P-4607 |
| Steering linkage | 36.3 | 4 | P-8121 |
| Power steering system | | | |
| Pump details | 36.2 | 3 | P-5615 |
| Pump installation - 6 cyl. | 36.4 | 1 | P-7364 |
| - 8 cyl. 302 w/o A/C,351-C | 36.4 | 10 | P-8119 |
| - 8 cyl. 302 w/A/C,351-W,400,429 | 36.4 | 11 | P-8120 |
| Steering gear details | 36.1 | 2 | P-4577 |
| Steering linkage | 36.3 | 4 | P-8121 |
| Steering column - automatic trans. - column shift | A72 | 26 | P-8623 |
| - floor shift | 35 | 24 | P-8624 |
| - manual trans. - column shift | 72 | 15 | P-8625 |
| - floor shift | 35 | 24 | P-8624 |
| Steering wheel - 2 spoke - pad blow | 138 | 8 | P-7513 |
| - 3 spoke - rim blow - with cover | 138 | 8 | P-7514 |
| - 3 spoke - rim blow - w/o cover | 138 | 9 | P-10685 |

## INDEX


| TITLE | SECTION | PAGE | ILLUS. NO. |
|---|---|---|---|
| **1972** | | | |
| **F (MUSTANG)** | | | |
| FRONT SUSPENSION - arms, shock absorbers, spindles, springs, stabilizers | 30 | 8 | P-6927 |
| STEERING | | | |
| Manual steering system | | | |
| Steering gear details | 36.1 | 6 | P-9859 |
| Steering linkage | 36.3 | 4 | P-8121 |
| Power steering system | | | |
| Pump details | 36.2 | 3 | P-5615 |
| Pump installation - 6 cyl. 250 | 36.4 | 1 | P-7364 |
| - 8 cyl. 302,351 | 36.4 | 10 | P-8119 |
| Steering gear details | 36.1 | 3 | P-4723 |
| Steering linkage | 36.3 | 4 | P-8121 |
| Steering column - floor shift - fixed wheel | 35 | 20 | P-7245 |
| - tilt wheel | 35 | 21 | P-7246 |
| Steering wheel - 2 spoke - pad blow | 138 | 8 | P-7513 |
| - 2 spoke - button blow | 138 | 9 | P-8307 |
| - 3 spoke - rim blow - with cover | 138 | 8 | P-7514 |
| - 3 spoke -rim blow - w/o cover | 138 | 9 | P-10685 |
| **L (PINTO)** | | | |
| FRONT SUSPENSION - arms, shock absorbers, spindles, springs, stabilizers | 30 | 9 | P-7936 |
| STEERING | | | |
| Manual steering system | | | |
| Steering gear details & linkage | 36.1 | 5 | P-7966 |
| Steering column - "Before 1/7/72" | 35 | 22 | P-7961 |
| - "From 1/7/72" | 35 | 25 | P-10303 |
| Steering wheel - 2 spoke wheel - button blow | 138 | 9 | P-8309 |
| - 2 spoke wheel - pad blow | 138 | 8 | P-7513 |
| **P (MAVERICK)** | | | |
| FRONT SUSPENSION - arms, shock absorbers, spindles, springs, stabilizer | 30 | 8 | P-6927 |
| STEERING | | | |
| Manual steering system | | | |
| Steering gear details | 36.1 | 6 | P-9859 |
| Steering linkage | 32 | 5 | P-6929 |
| Power steering system | | | |
| Control valve details | 36.2 | 5 | P-7454 |
| Cylinder details | 36.2 | 6 | P-4180 |
| Pump details | 36.2 | 3 | P-5615 |
| Pump installation - 6 cyl. 170,200 | 36.4 | 8 | P-6957 |
| - 6 cyl. 250 | 36.4 | 4 | P-6946 |
| - 8 cyl. 302 | 36.4 | 8 | P-6957 |
| Steering linkage | 36.3 | 3 | P-6958 |
| Steering column - automatic trans. - column shift | A72 | 23 | P-7747 |
| - floor shift | 35 | 23 | P-8323 |
| - manual trans. | 72 | 14 | P-7748 |
| Steering wheel - 2 spoke - pad blow | 138 | 8 | P-7513 |
| - 2 spoke - button blow | 138 | 9 | P-8309 |



COPYRIGHT © 1975 — FORD MOTOR COMPANY — DEARBORN, MICHIGAN

## INDEX


| TITLE | SECTION | PAGE | ILLUS. NO. |
|---|---|---|---|
| **1972** | | | |
| **S (THUNDERBIRD)** | | | |
| FRONT SUSPENSION - arms, shock absorbers, springs, spindles, stabilizer | 30 | 11 | P-8639 |
| STEERING | | | |
| Power steering system | | | |
| Pump details - Ford type | 36.2 | 3 | P-5615 |
| Pump details - Saginaw type | 36.2 | 6 | P-8816 |
| Pump installation -400, (429 w/o A/C) | 36.4 | 3 | P-7369 |
| - (429 with A/C), 460 | 36.4 | 1 | P-8680 |
| Steering gear details | 36.1 | 2 | P-4577 |
| Steering linkage | 36.3 | 4 | P-8121 |
| Steering column - automatic transmission - fixed | A72 | 25 | P-8622 |
| - tilt | A72 | 24 | P-8621 |
| Steering wheel - 2 spoke - w/o speed control | 138 | 8 | P-7513 |
| - 2 spoke - w/speed control | 97.1 | 25 | P-9119 |
| - 3 spoke - rim blow | 138 | 8 | P-7514 |
| **U (BRONCO)** | | | |
| FRONT AXLE | 30 | 10 | P-8317 |
| FRONT SUSPENSION - air spring installation | 30 | 12 | P-10676 |
| - arms, shock absorbers, springs | 30 | 6 | P-4938 |
| - spindles | 30 | 10 | P-8317 |
| STEERING | | | |
| Manual steering system | | | |
| Steering gear details | 36.1 | 6 | P-9981 |
| Steering linkage | 30 | 6 | P-4938 |
| Power steering system | | | |
| Pump details | 36.2 | 3 | P-5615 |
| Pump installation | 36.4 | 12 | P-10454 |
| Steering gear details | 36.1 | 3 | P-4723 |
| Steering linkage | 30 | 6 | P-4938 |
| Steering column - manual transmission - manual steering | 72 | 16 | P-10771 |
| - power steering | 72 | 17 | P-10773 |
| Steering shock absorber installation | 35 | 7 | P-4962 |
| Steering wheel & horn ring | 138 | 3 | P-4953 |

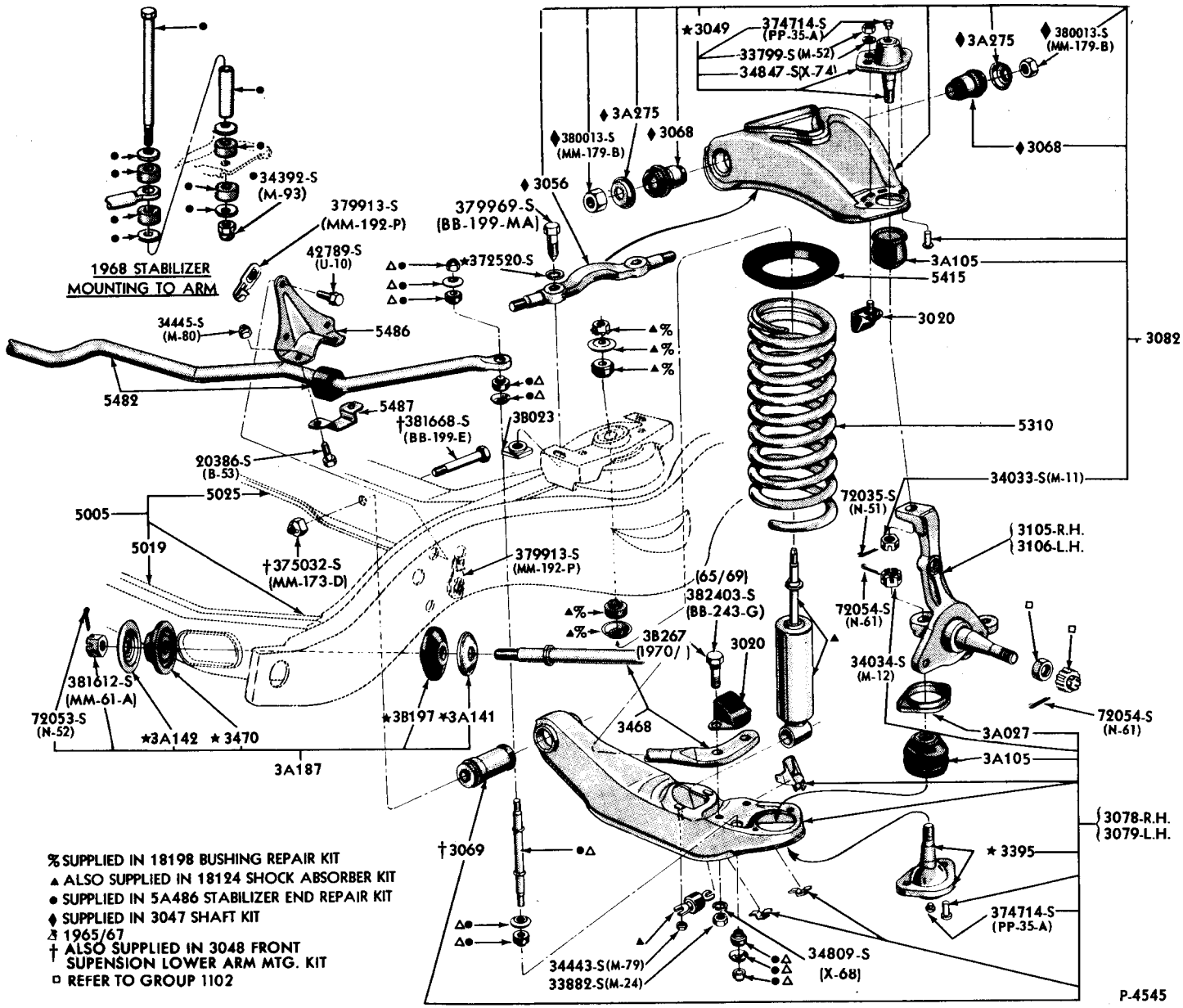



COPYRIGHT © 1975 — FORD MOTOR COMPANY — DEARBORN, MICHIGAN

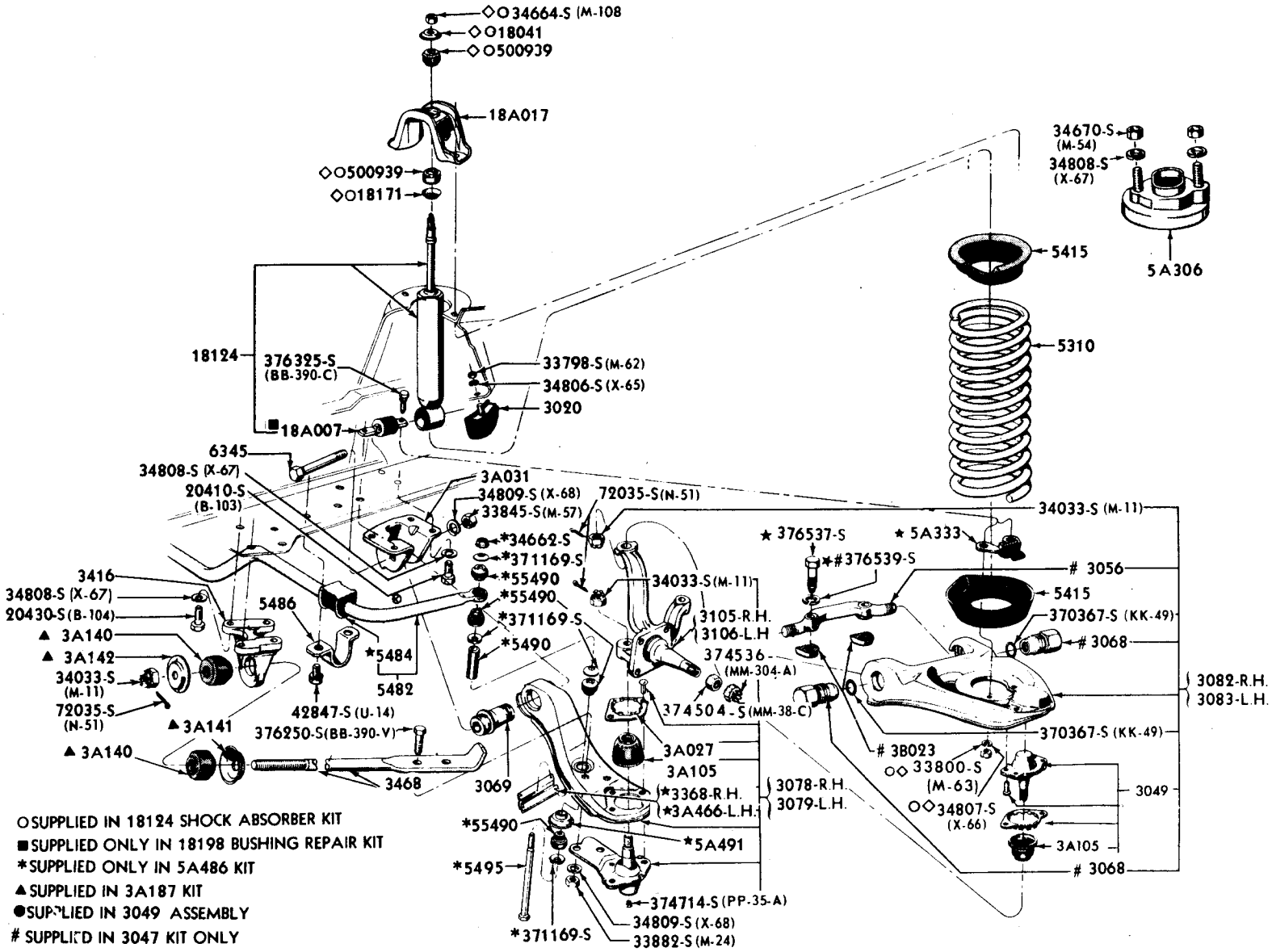
◇O34664-S (M-108)
◇O18041
◇O500939
18A017
◇O500939
◇O18171
18124
376325-S (BB-390-C)
33798-S (M-62)
34806-S (X-65)
3020
■18A007
6345
34808-S (X-67)
20410-S (B-103)
3A031
34809-S (X-68)
33845-S (M-57)
72035-S (N-51)
*34662-S
*371169-S
*55490
*55490
*371169-S
*5490
3416
34808-S (X-67)
20430-S (B-104)
▲ 3A140
▲ 3A142
34033-S (M-11)
72035-S (N-51)
5486
*5484
5482
42847-S (U-14)
▲3A141
376250-S (BB-390-V)
▲ 3A140
3468
3069
*55490
*5495
*371169-S
34033-S (M-11)
3105-R.H.
3106-L.H
374536-S (MM-304-A)
374504-S (MM-38-C)
3A027
3A105
*3368-R.H.
*3A466-L.H.
3078-R.H.
3079-L.H.
*5A491
374714-S (PP-35-A)
34809-S (X-68)
33882-S (M-24)
34670-S (M-54)
34808-S (X-67)
5A306
5415
5310
34033-S (M-11)
★ 376537-S
★ 5A333
*#376539-S
# 3056
5415
370367-S (KK-49)
# 3068
3082-R.H.
3083-L.H.
370367-S (KK-49)
# 3B023
○◇ 33800-S (M-63)
○◇34807-S (X-66)
3049
3A105
# 3068
○SUPPLIED IN 18124 SHOCK ABSORBER KIT
■SUPPLIED ONLY IN 18198 BUSHING REPAIR KIT
*SUPPLIED ONLY IN 5A486 KIT
▲SUPPLIED IN 3A187 KIT
●SUPPLIED IN 3049 ASSEMBLY
# SUPPLIED IN 3047 KIT ONLY

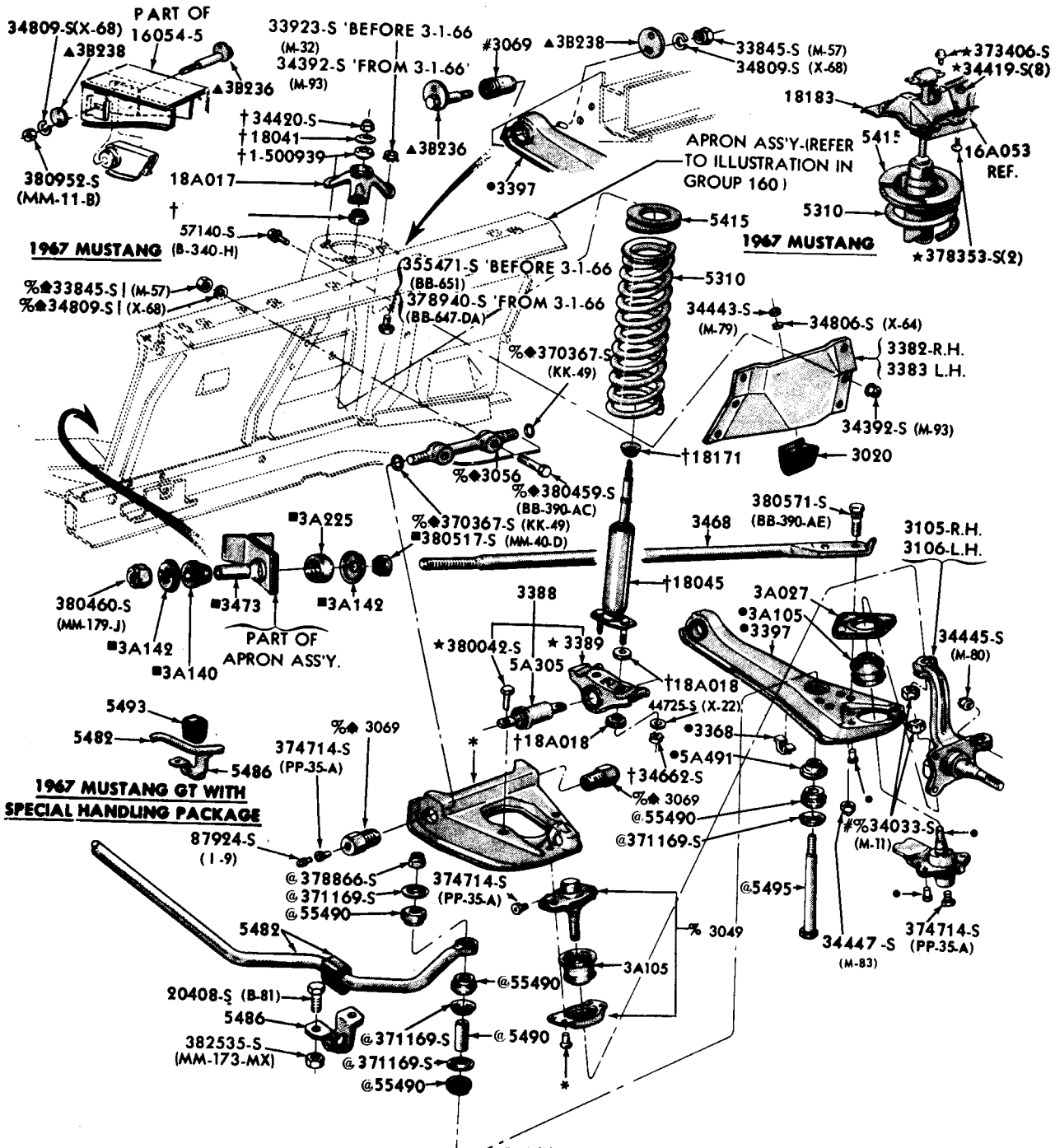


@SUPPLIED ONLY IN 5A486 STABILIZER REPAIR KIT
†SUPPLIED IN 18124 SHOCK ABSORBER KIT
▲SUPPLIED ONLY IN 3048 KIT
■SUPPLIED ONLY IN 3A187 KIT

#ALSO SUPPLIED WITH 3078 LOWER ARM ASS'Y.
•SUPPLIED ONLY WITH 3078 LOWER ARM ASS'Y.
* SUPPLIED WITH 3082 UPPER ARM ASS'Y. OR 3049 JOINT ASS'Y.
%ALSO SUPPLIED WITH 3082 UPPER ARM ASS'Y.
⬟SUPPLIED IN 3047 KIT

P-4945


COPYRIGHT © 1975 — FORD MOTOR COMPANY — DEARBORN, MICHIGAN

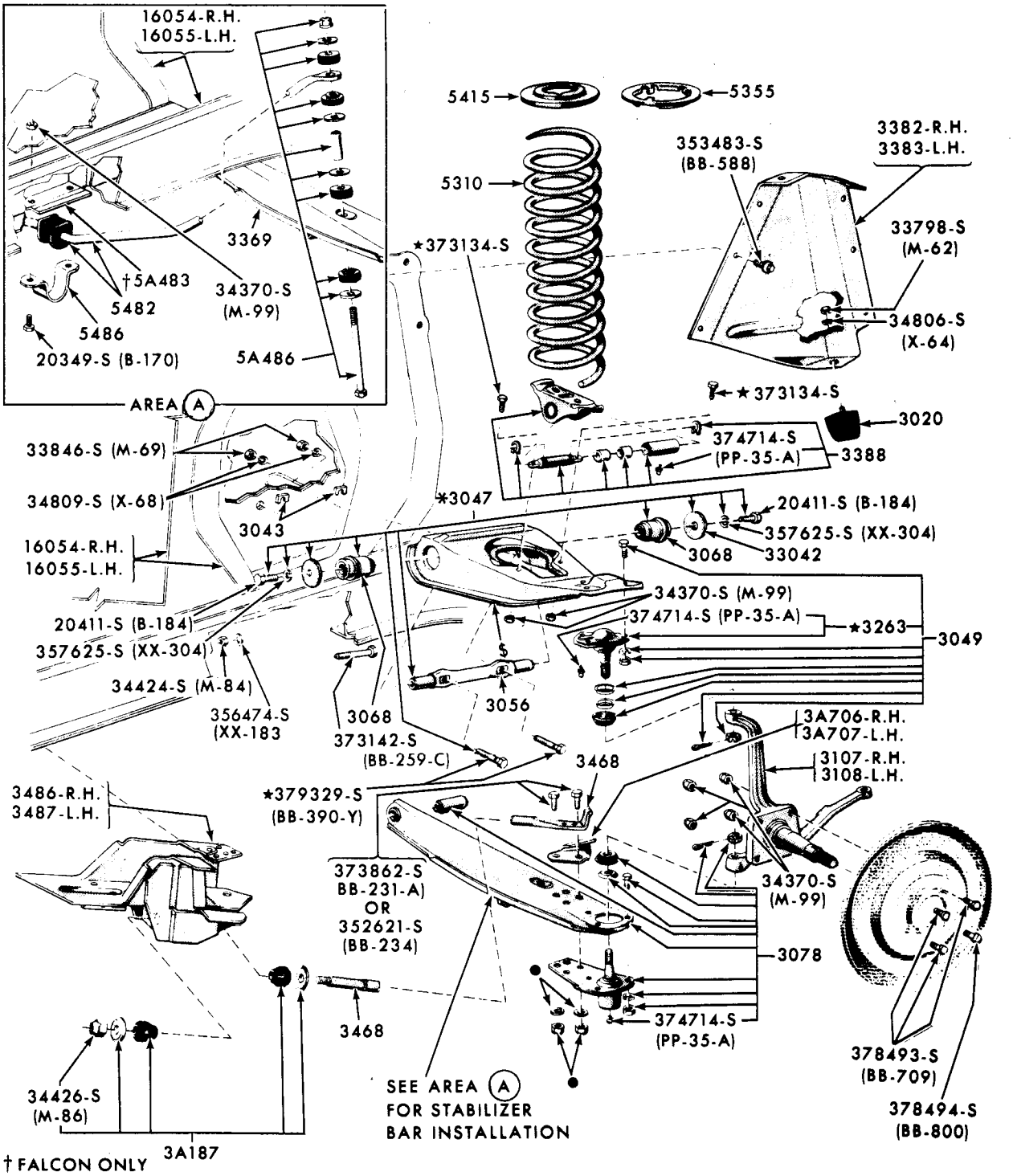


† FALCON ONLY
* ALSO SUPPLIED IN 3082 UPPER ARM, SHAFT AND JOINT ASSEMBLY
● SUPPLIED IN 3468 LOWER ARM STRUT REPAIR KIT
□ SUPPLIED IN 3082 UPPER ARM ASSY
& SUPPLIED ONLY IN 3082 UPPER ARM, SHAFT AND JOINT ASSEMBLY

P-3120

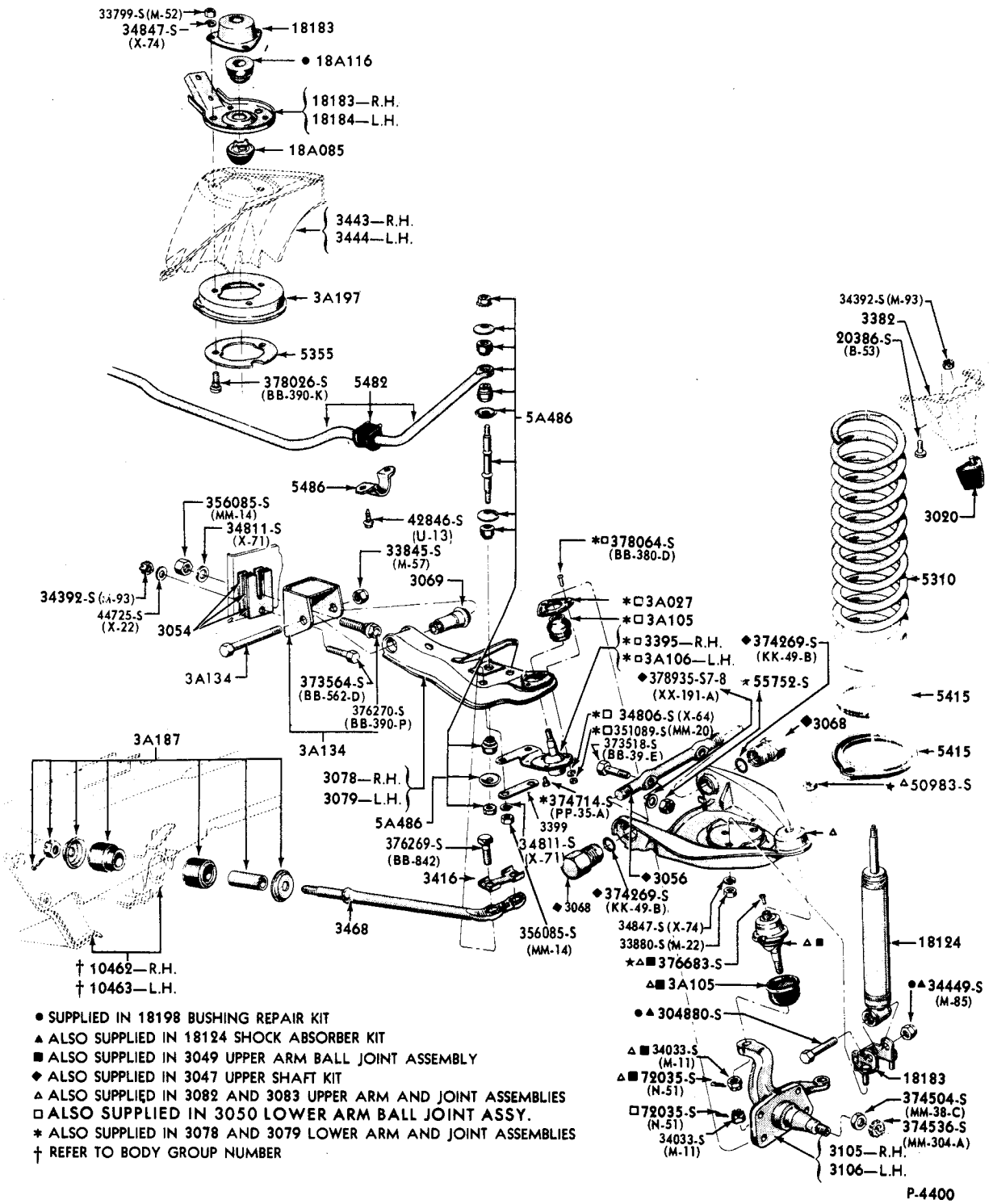


● SUPPLIED IN 18198 BUSHING REPAIR KIT
▲ ALSO SUPPLIED IN 18124 SHOCK ABSORBER KIT
■ ALSO SUPPLIED IN 3049 UPPER ARM BALL JOINT ASSEMBLY
◆ ALSO SUPPLIED IN 3047 UPPER SHAFT KIT
△ ALSO SUPPLIED IN 3082 AND 3083 UPPER ARM AND JOINT ASSEMBLIES
□ ALSO SUPPLIED IN 3050 LOWER ARM BALL JOINT ASSY.
* ALSO SUPPLIED IN 3078 AND 3079 LOWER ARM AND JOINT ASSEMBLIES
† REFER TO BODY GROUP NUMBER


COPYRIGHT © 1975 — FORD MOTOR COMPANY — DEARBORN, MICHIGAN

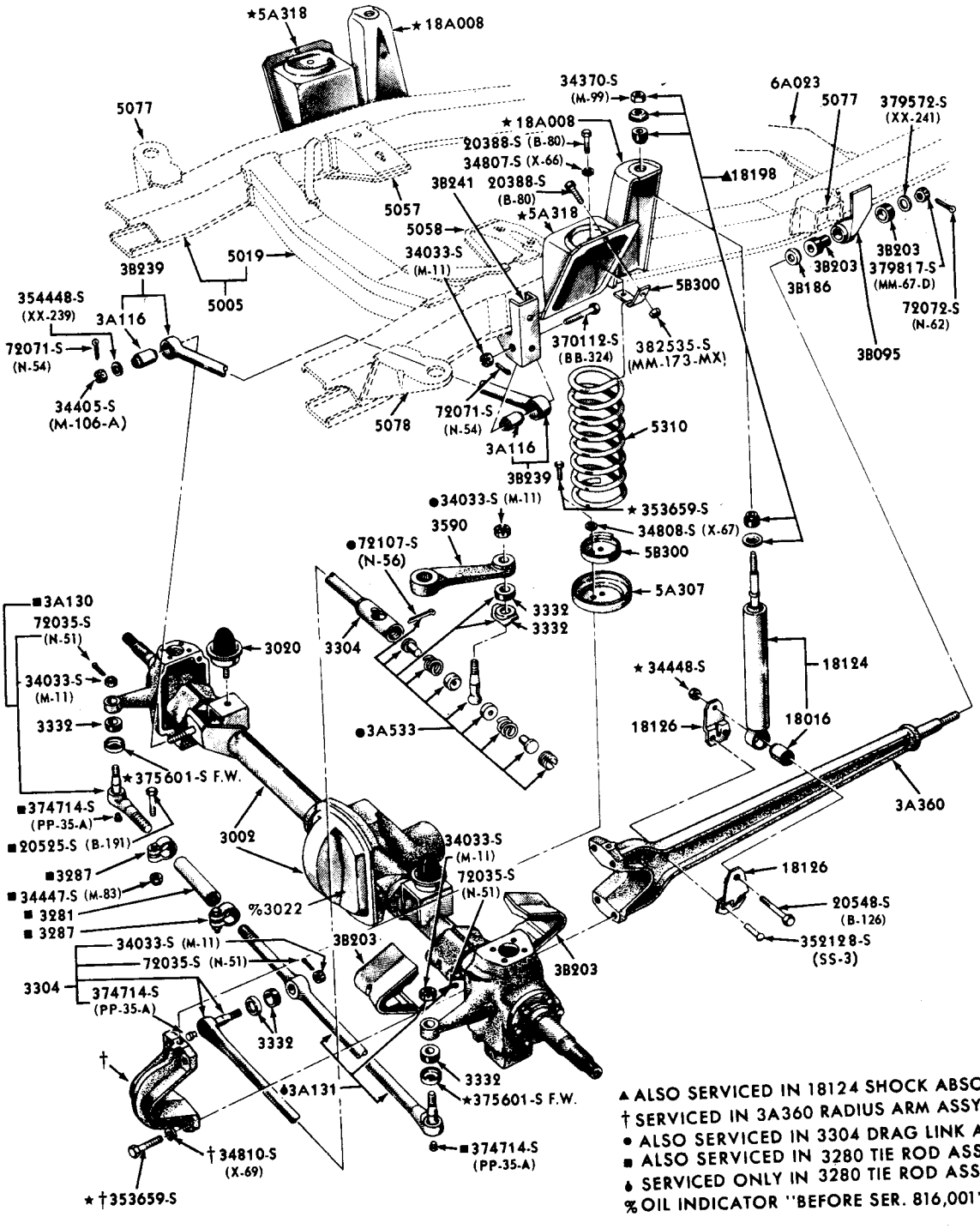


▲ ALSO SERVICED IN 18124 SHOCK ABSORBER KIT
† SERVICED IN 3A360 RADIUS ARM ASSY.
● ALSO SERVICED IN 3304 DRAG LINK ASSY.
■ ALSO SERVICED IN 3280 TIE ROD ASSY.
♦ SERVICED ONLY IN 3280 TIE ROD ASSY.
% OIL INDICATOR "BEFORE SER. 816,001"

P-4938

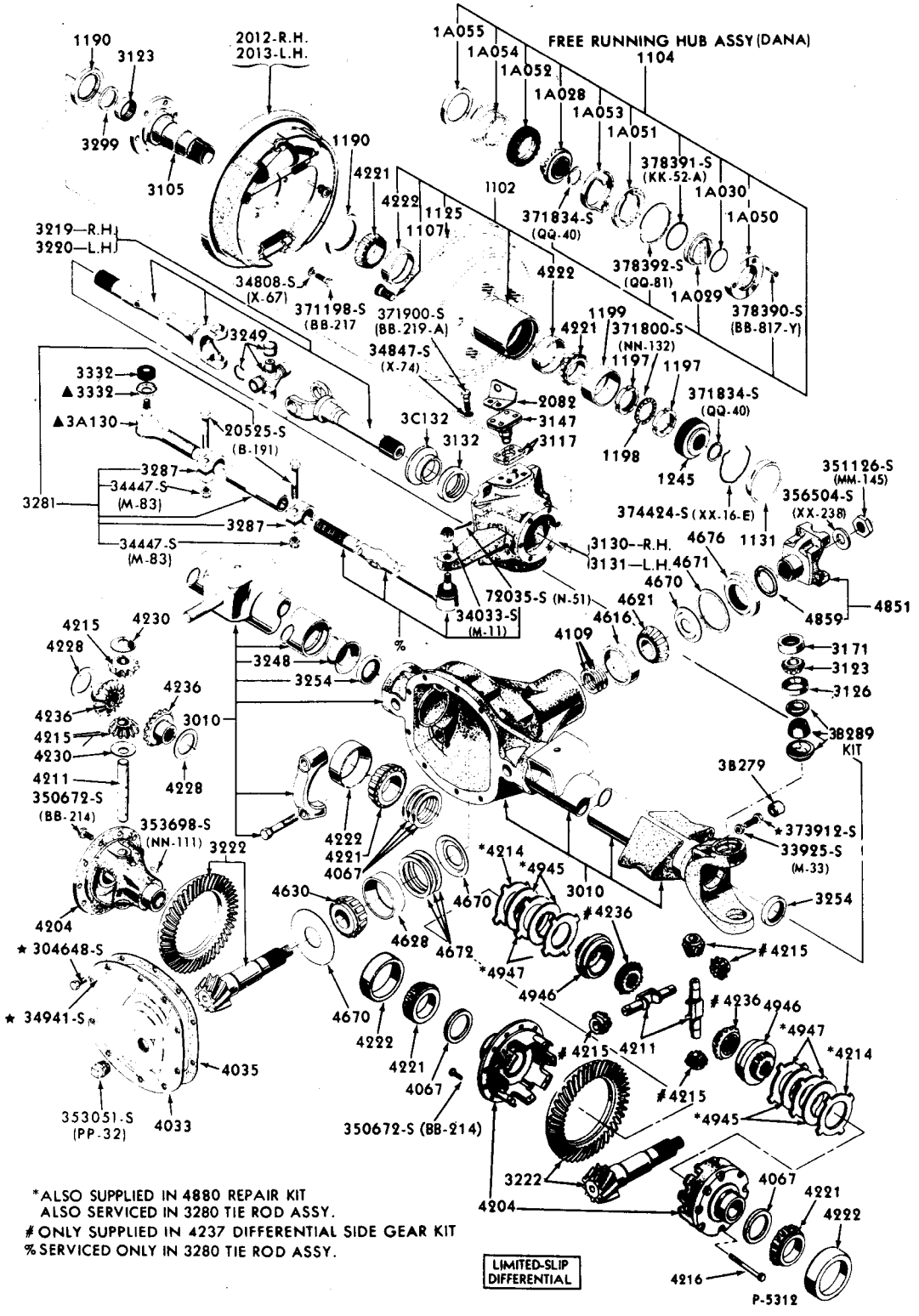


*ALSO SUPPLIED IN 4880 REPAIR KIT
ALSO SERVICED IN 3280 TIE ROD ASSY.
# ONLY SUPPLIED IN 4237 DIFFERENTIAL SIDE GEAR KIT
% SERVICED ONLY IN 3280 TIE ROD ASSY.

FRONT AXLE
1966/71 BRONCO - "BEFORE SER. K20,001"


COPYRIGHT © 1975 — FORD MOTOR COMPANY — DEARBORN, MICHIGAN

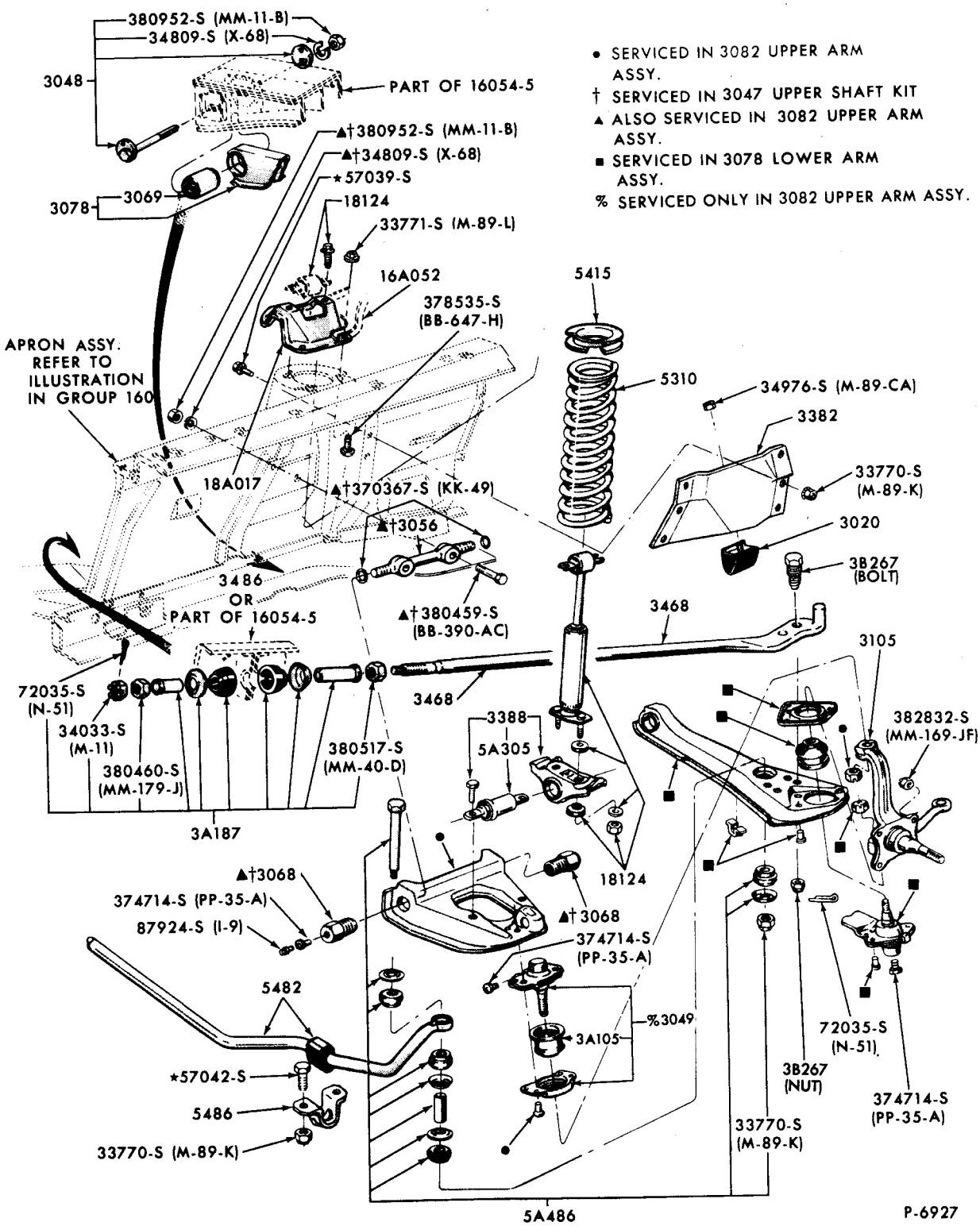


• SERVICED IN 3082 UPPER ARM ASSY.
† SERVICED IN 3047 UPPER SHAFT KIT
▲ ALSO SERVICED IN 3082 UPPER ARM ASSY.
■ SERVICED IN 3078 LOWER ARM ASSY.
% SERVICED ONLY IN 3082 UPPER ARM ASSY.

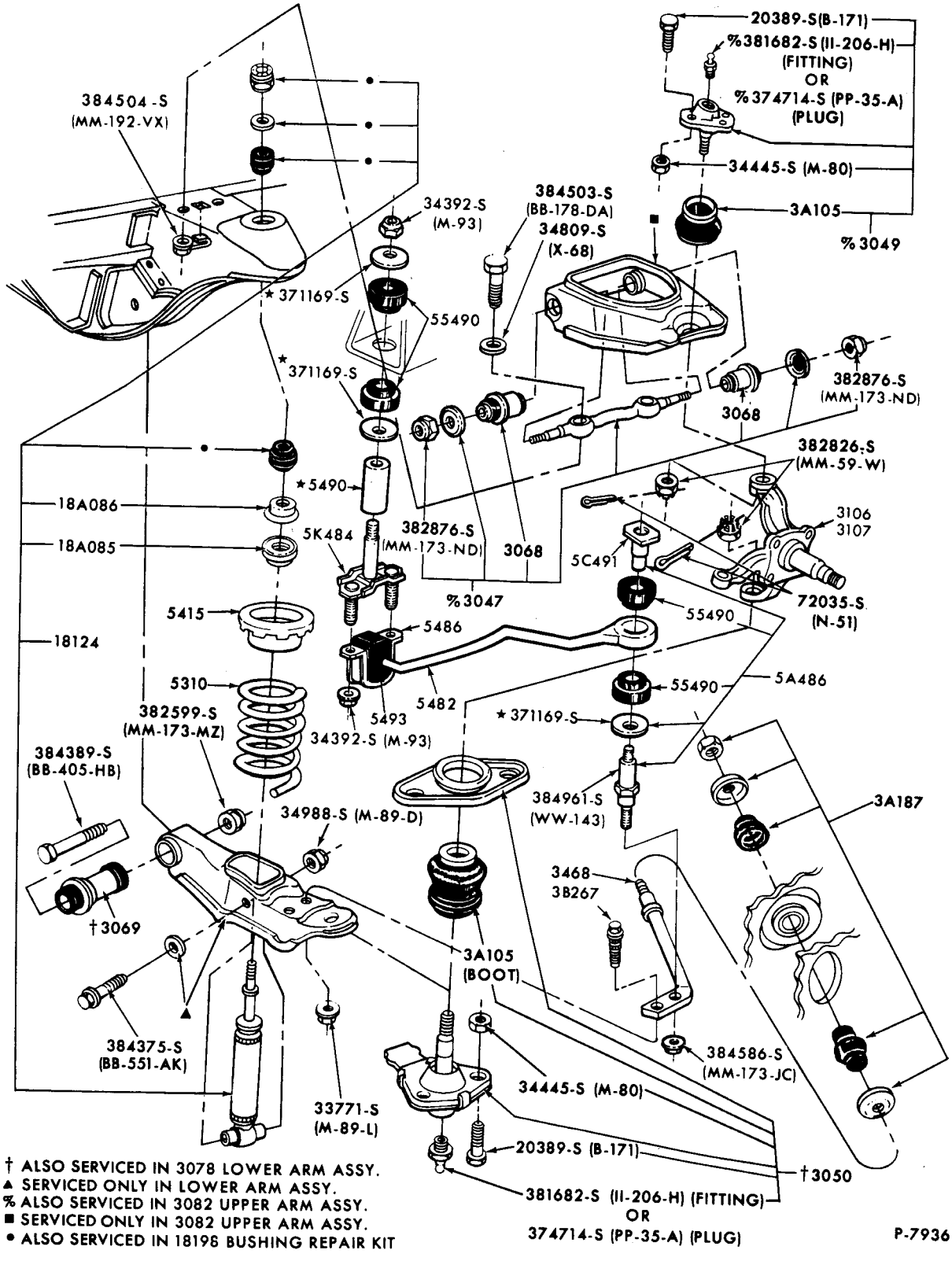


† ALSO SERVICED IN 3078 LOWER ARM ASSY.
▲ SERVICED ONLY IN LOWER ARM ASSY.
% ALSO SERVICED IN 3082 UPPER ARM ASSY.
■ SERVICED ONLY IN 3082 UPPER ARM ASSY.
• ALSO SERVICED IN 18198 BUSHING REPAIR KIT

FRONT SUSPENSION
1971/72 PINTO


COPYRIGHT © 1975 — FORD MOTOR COMPANY — DEARBORN, MICHIGAN

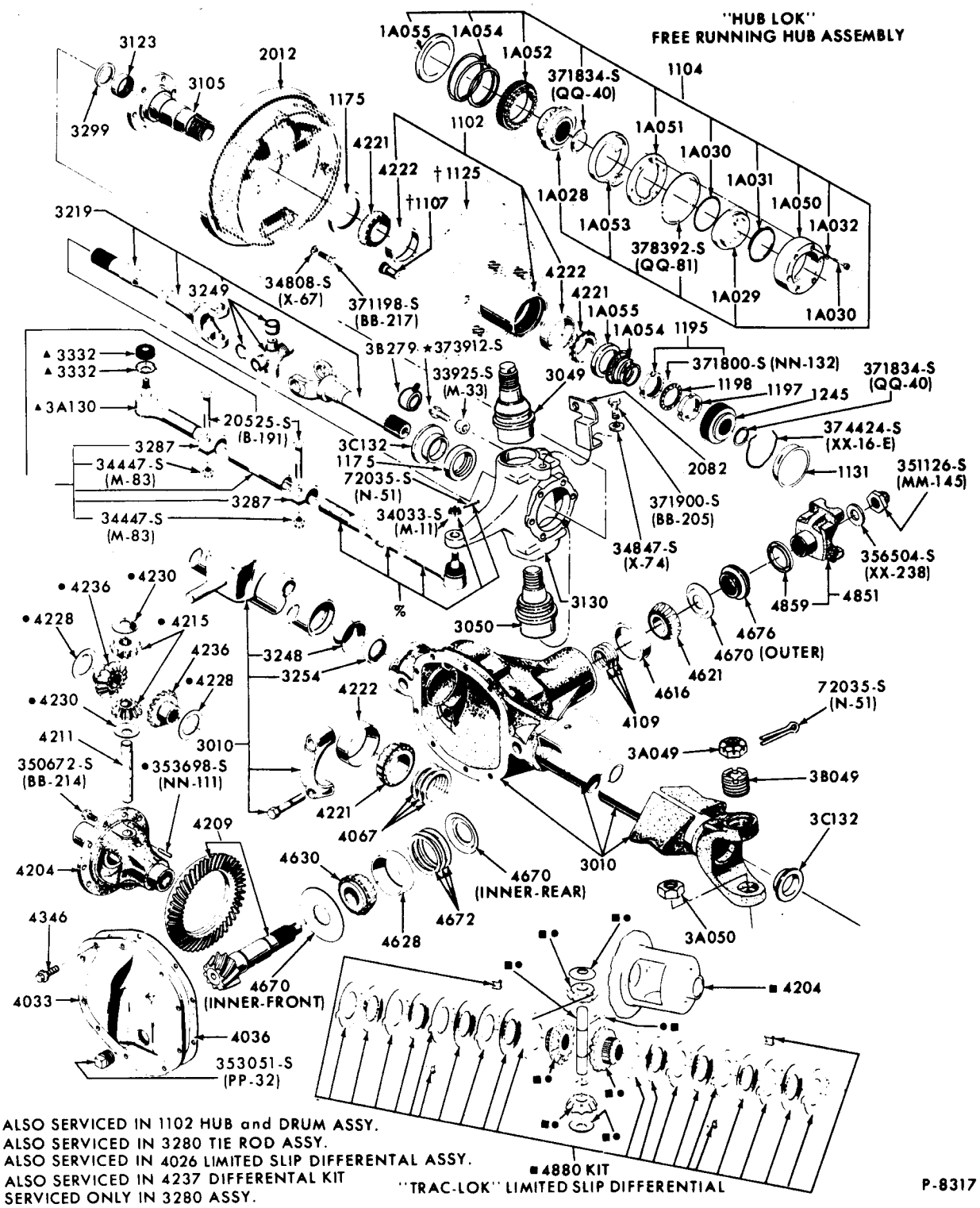


† ALSO SERVICED IN 1102 HUB and DRUM ASSY.
▲ ALSO SERVICED IN 3280 TIE ROD ASSY.
■ ALSO SERVICED IN 4026 LIMITED SLIP DIFFERENTAL ASSY.
• ALSO SERVICED IN 4237 DIFFERENTAL KIT
% SERVICED ONLY IN 3280 ASSY.

FRONT AXLE
1971/72 BRONCO - "FROM SER. K20,001"

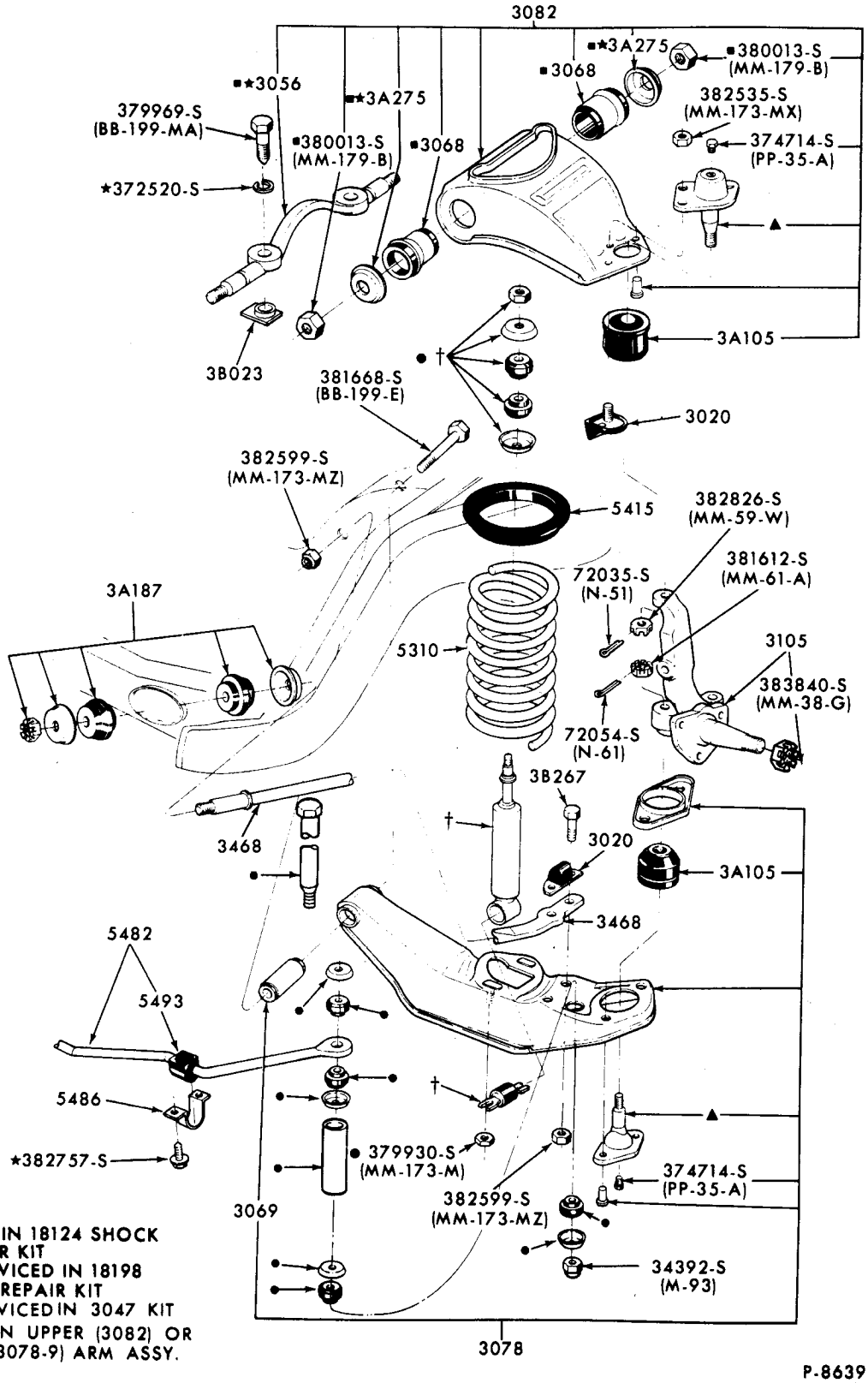


† SERVICED IN 18124 SHOCK ABSORBER KIT
● ALSO SERVICED IN 18198 BUSHING REPAIR KIT
■ ALSO SERVICED IN 3047 KIT
▲ SERVICED IN UPPER (3082) OR LOWER (3078-9) ARM ASSY.

P-8639

FRONT SUSPENSION
1972 FORD, THUNDERBIRD AND TORINO


COPYRIGHT © 1975 — FORD MOTOR COMPANY — DEARBORN, MICHIGAN

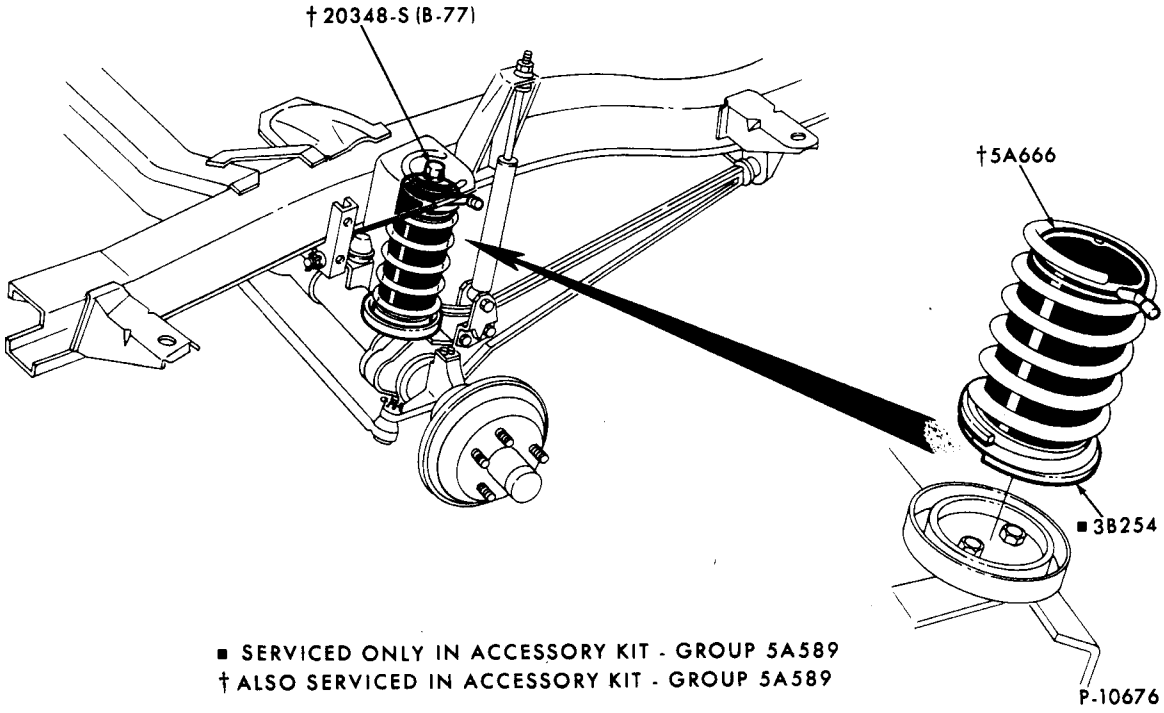


■ SERVICED ONLY IN ACCESSORY KIT - GROUP 5A589
† ALSO SERVICED IN ACCESSORY KIT - GROUP 5A589

FRONT SUSPENSION (AIR SPRING INSTALLATION)
1966/72 BRONCO

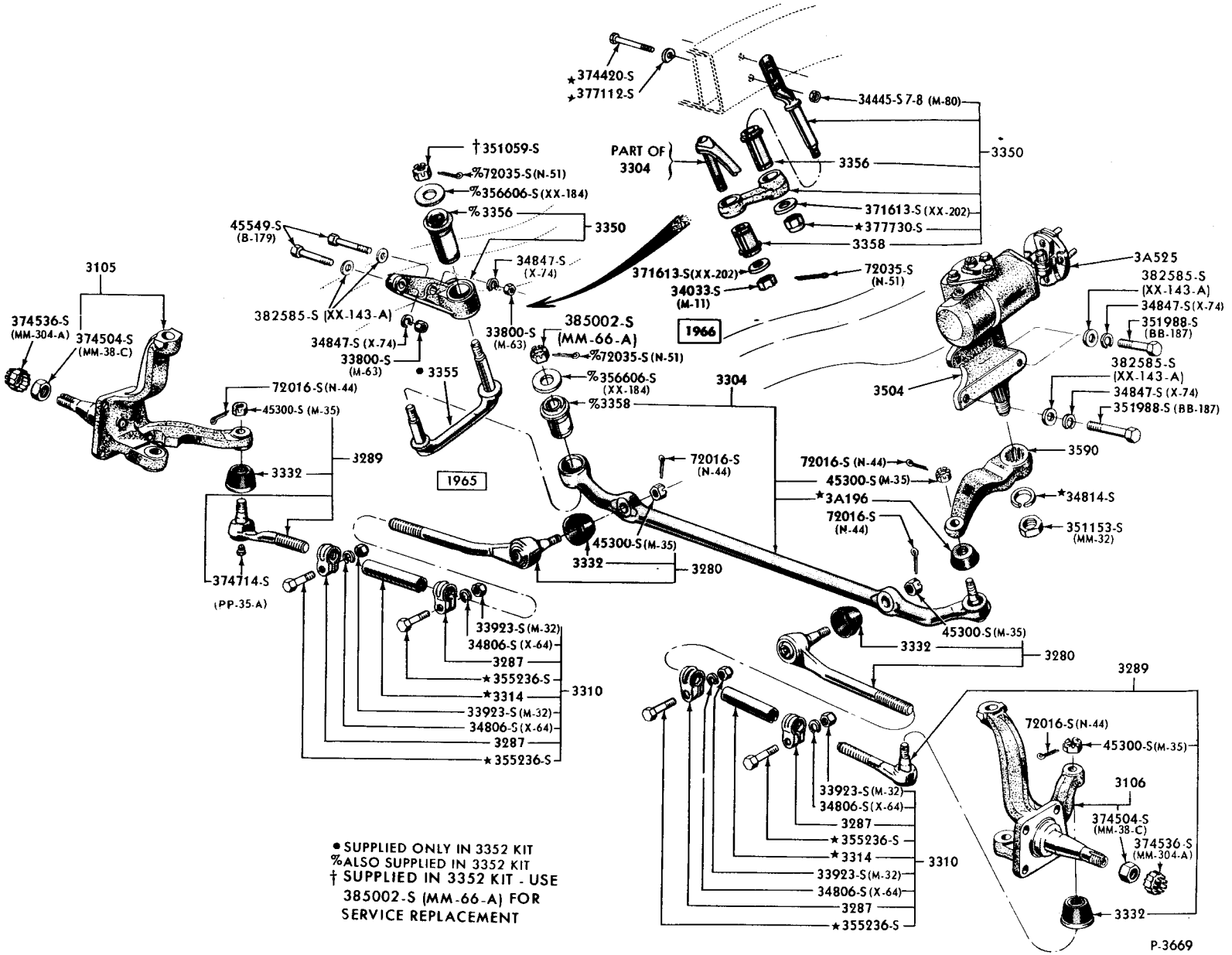


• SUPPLIED ONLY IN 3352 KIT
% ALSO SUPPLIED IN 3352 KIT
† SUPPLIED IN 3352 KIT - USE 385002-S (MM-66-A) FOR SERVICE REPLACEMENT



COPYRIGHT © 1975 — FORD MOTOR COMPANY — DEARBORN, MICHIGAN

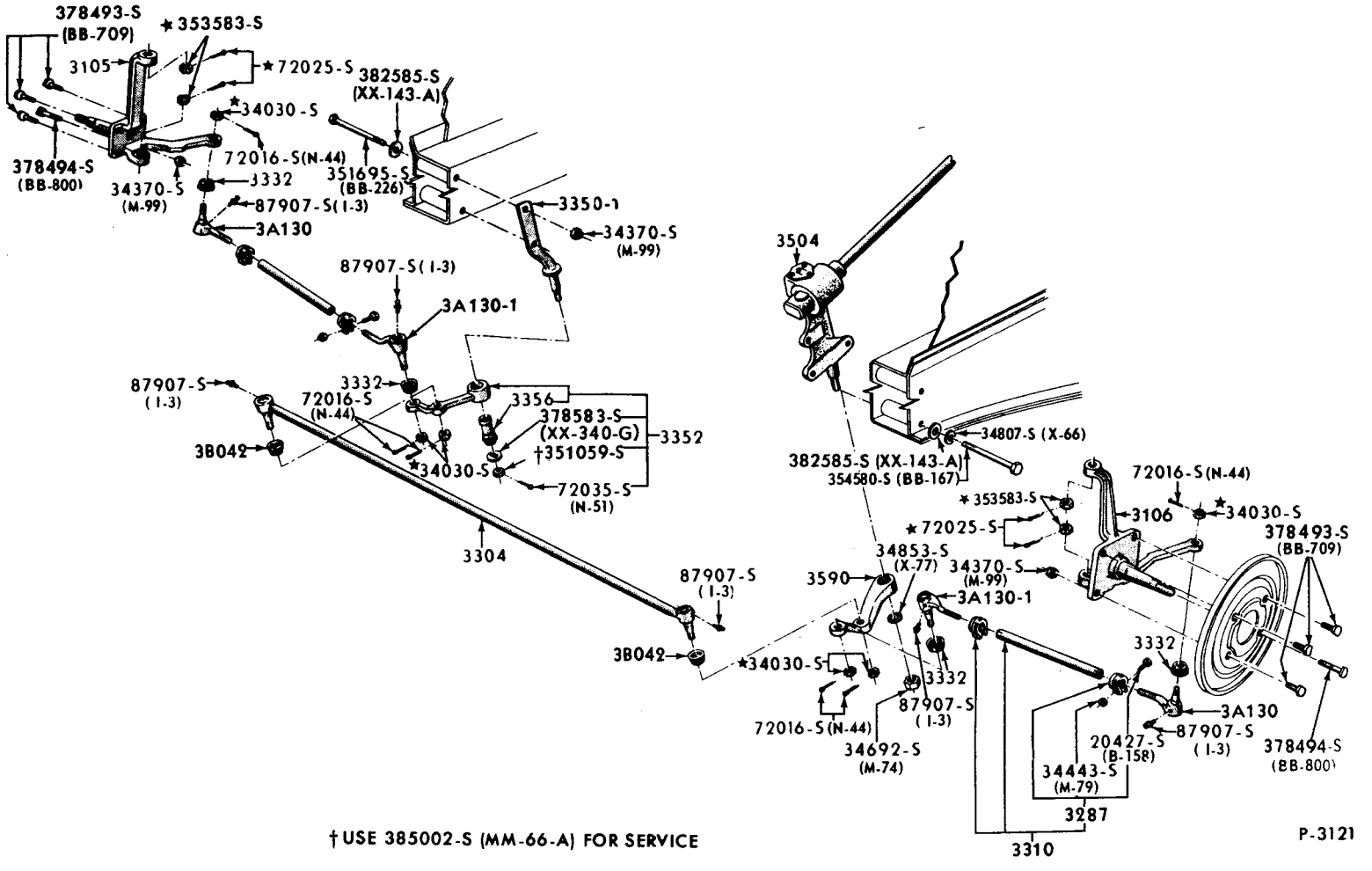


†USE 385002-S (MM-66-A) FOR SERVICE

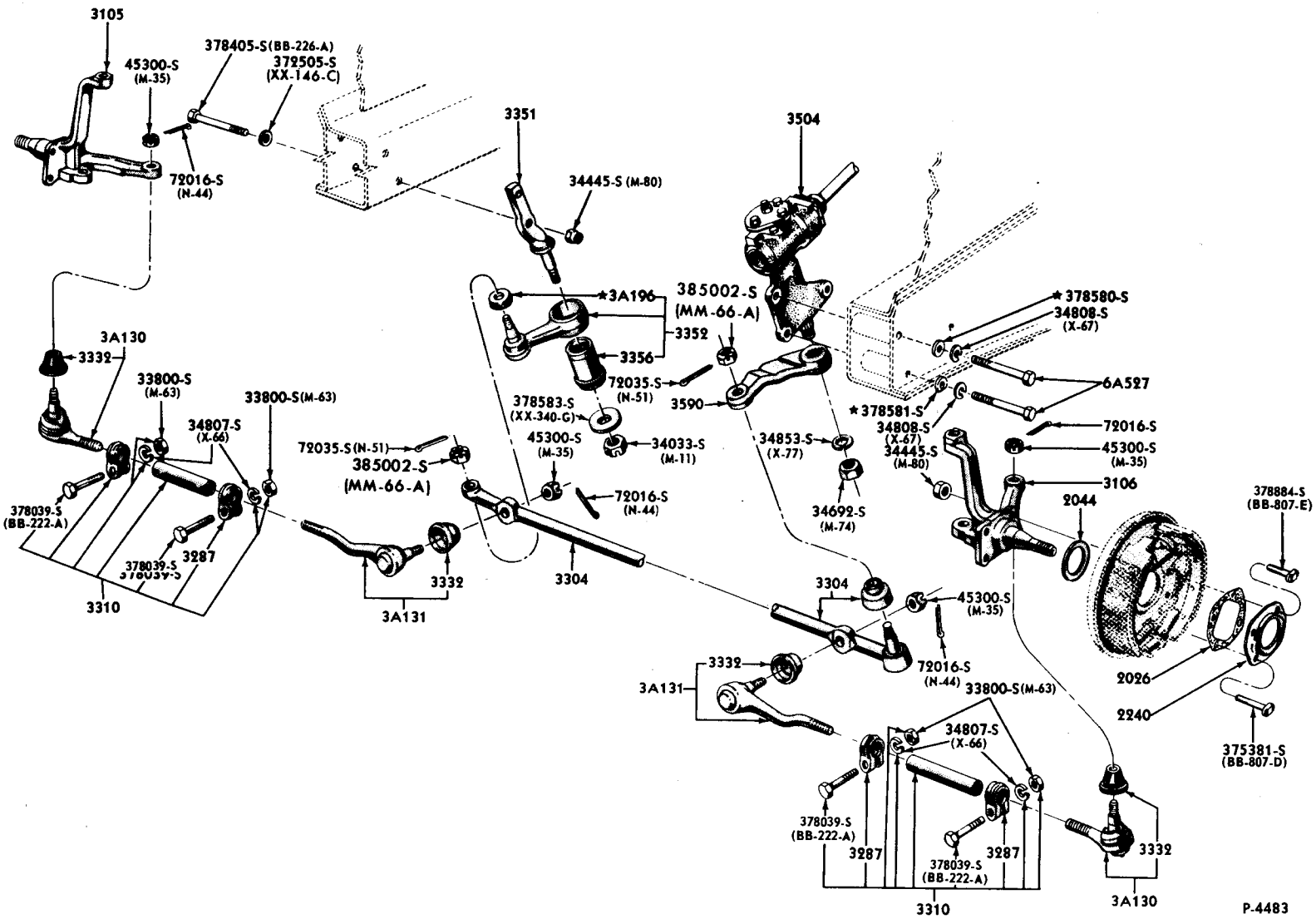


MANUAL STEERING LINKAGE - 8 CYLINDER
1965 FALCON, 1965/66 MUSTANG

COPYRIGHT © 1975 — FORD MOTOR COMPANY — DEARBORN, MICHIGAN

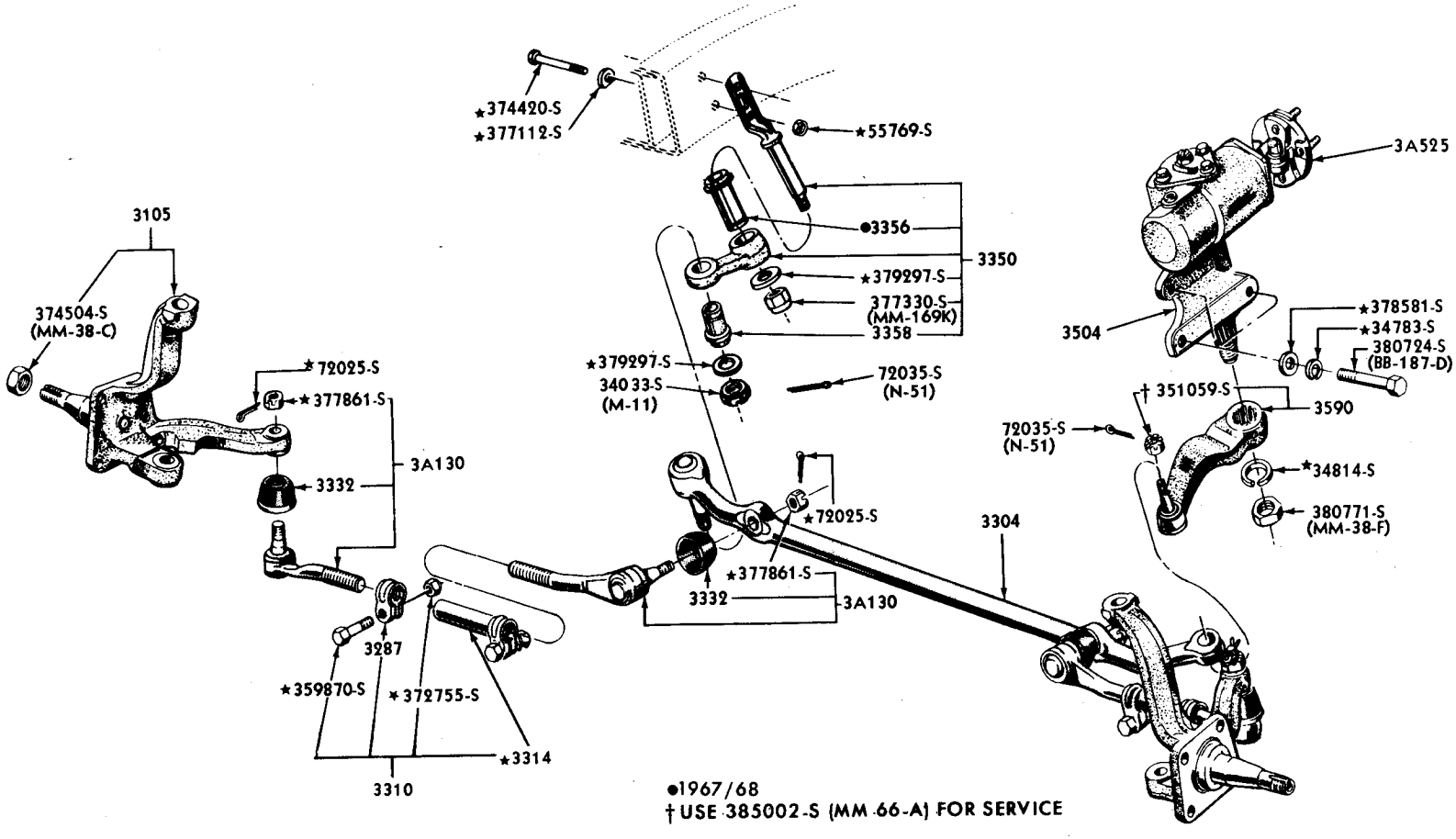
★374420-S
★377112-S
★55769-S
3A525
3105
●3356
3350
★379297-S
377330-S
(MM-169K)
3358
3504
★378581-S
★34783-S
380724-S
(BB-187-D)
374504-S
(MM-38-C)
★72025-S
★377861-S
★379297-S
34033-S
(M-11)
72035-S
(N-51)
† 351059-S
3590
72035-S
(N-51)
3A130
3332
★34814-S
★72025-S
380771-S
(MM-38-F)
3304
★377861-S
3332
3A130
3287
★359870-S
★372755-S
★3314
3310
●1967/68
† USE 385002-S (MM-66-A) FOR SERVICE

P-5959

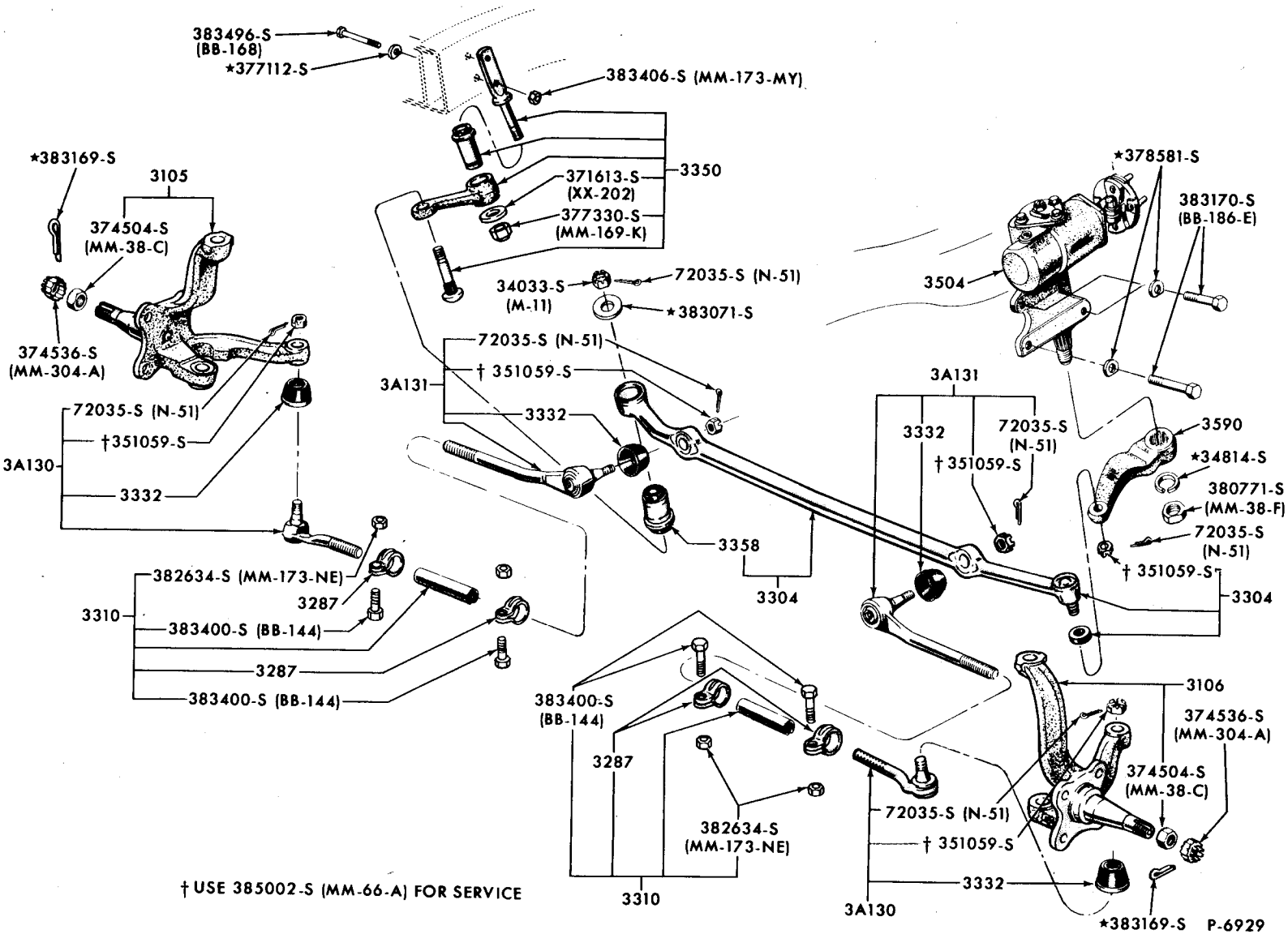



COPYRIGHT © 1975 — FORD MOTOR COMPANY — DEARBORN, MICHIGAN

STEERING COLUMN FOR FLOOR OR CONSOLE MOUNTED SHIFT - TYPICAL
1965/67 FORD

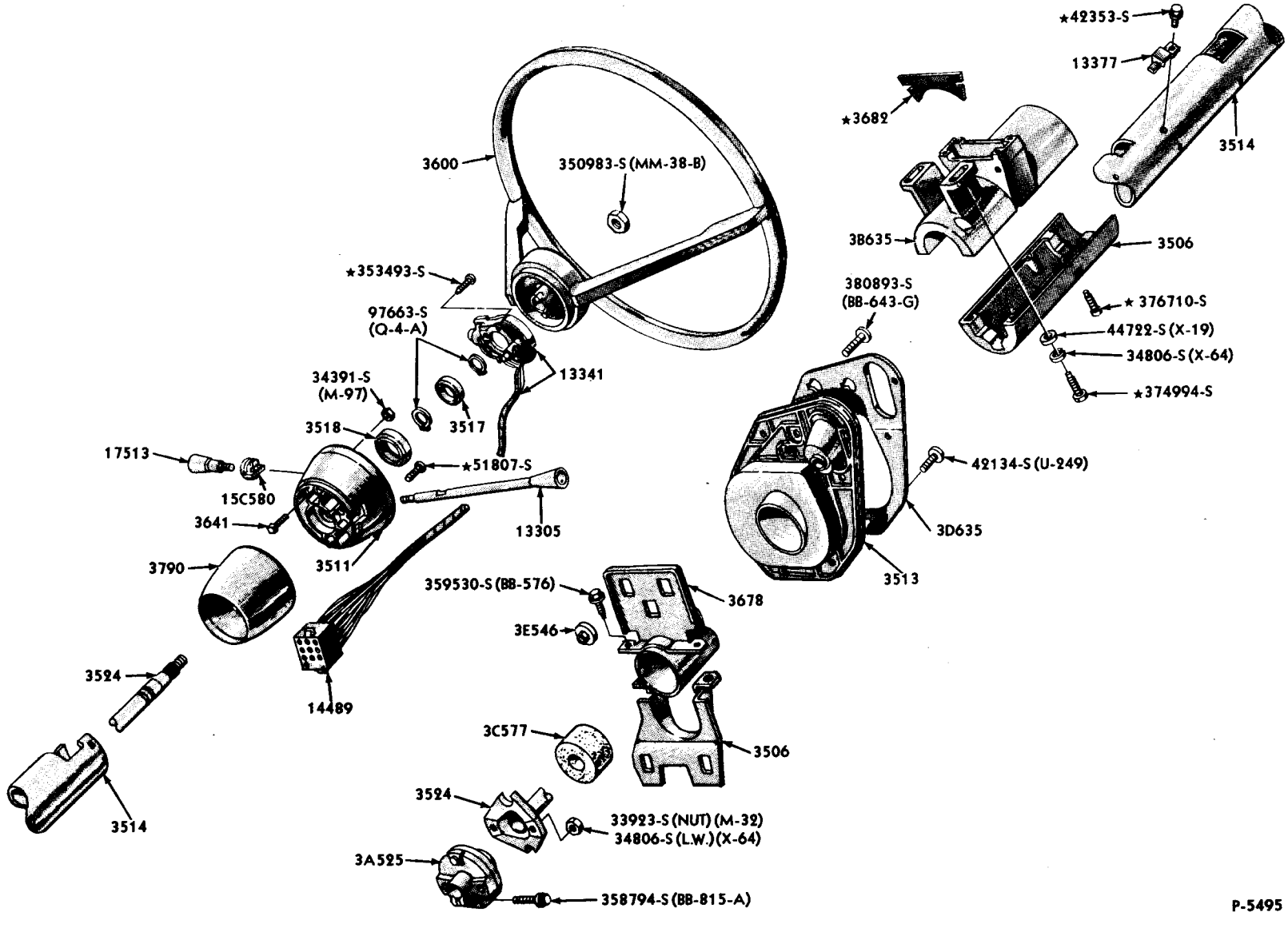


P-5495



COPYRIGHT © 1975 — FORD MOTOR COMPANY — DEARBORN, MICHIGAN

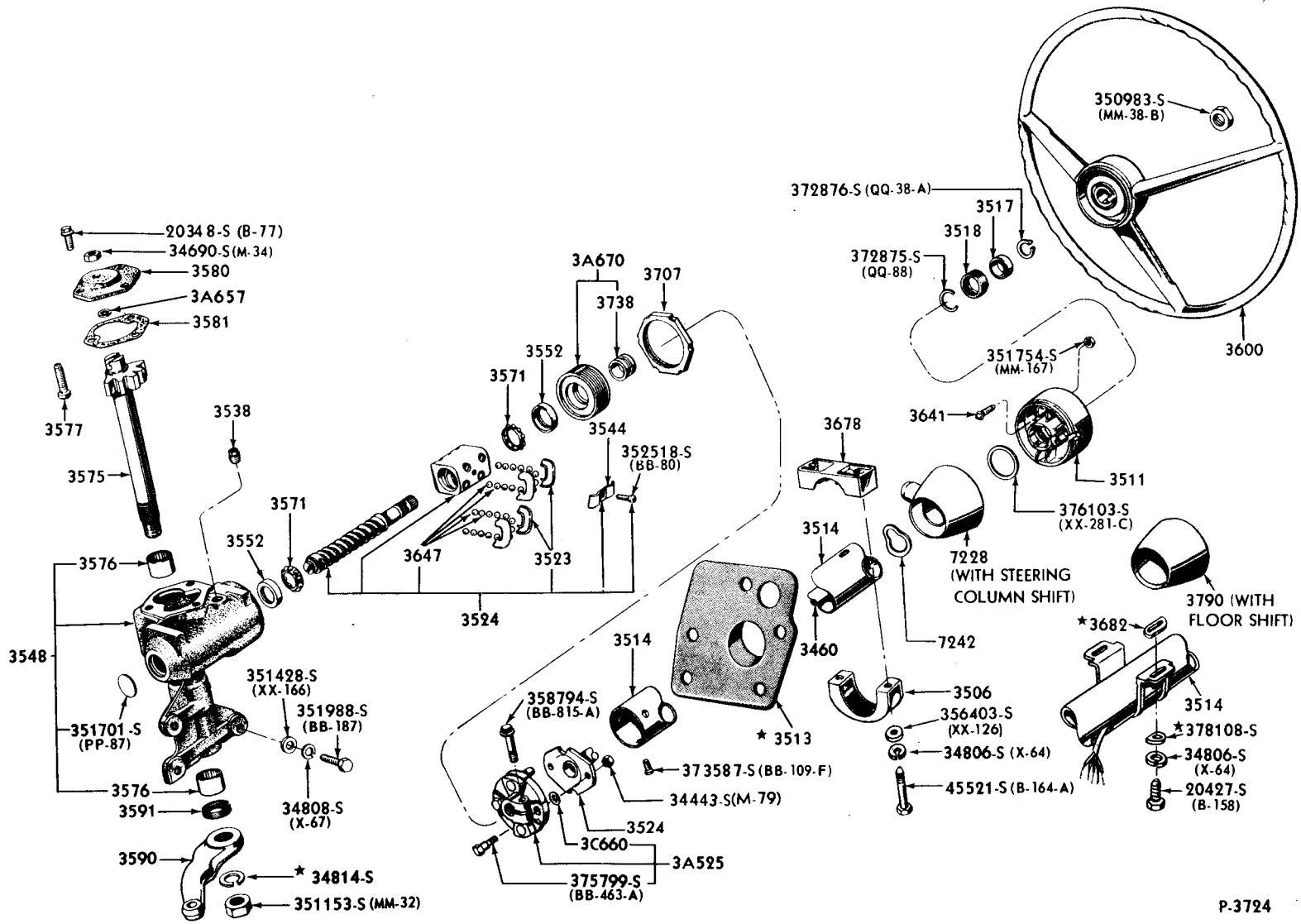
350983-S (MM-38-B)
3600
372876-S (QQ-38-A)
3517
3518
372875-S (QQ-88)
351754-S (MM-167)
3641
3511
376103-S (XX-281-C)
7228 (WITH STEERING COLUMN SHIFT)
3790 (WITH FLOOR SHIFT)
3682
378108-S
34806-S (X-64)
20427-S (B-158)
3514
3678
7242
3460
3506
356403-S (XX-126)
34806-S (X-64)
45521-S (B-164-A)
3513
373587-S (BB-109-F)
34443-S (M-79)
3524
3C660
3A525
375799-S (BB-463-A)
358794-S (BB-815-A)
3514
3A670
3707
3738
3552
3571
3544
352518-S (BB-80)
3523
3647
3524
20348-S (B-77)
34690-S (M-34)
3580
3A657
3581
3577
3575
3538
3571
3552
3576
3548
351701-S (PP-87)
351428-S (XX-166)
351988-S (BB-187)
34808-S (X-67)
3576
3591
3590
34814-S
351153-S (MM-32)
P-3724

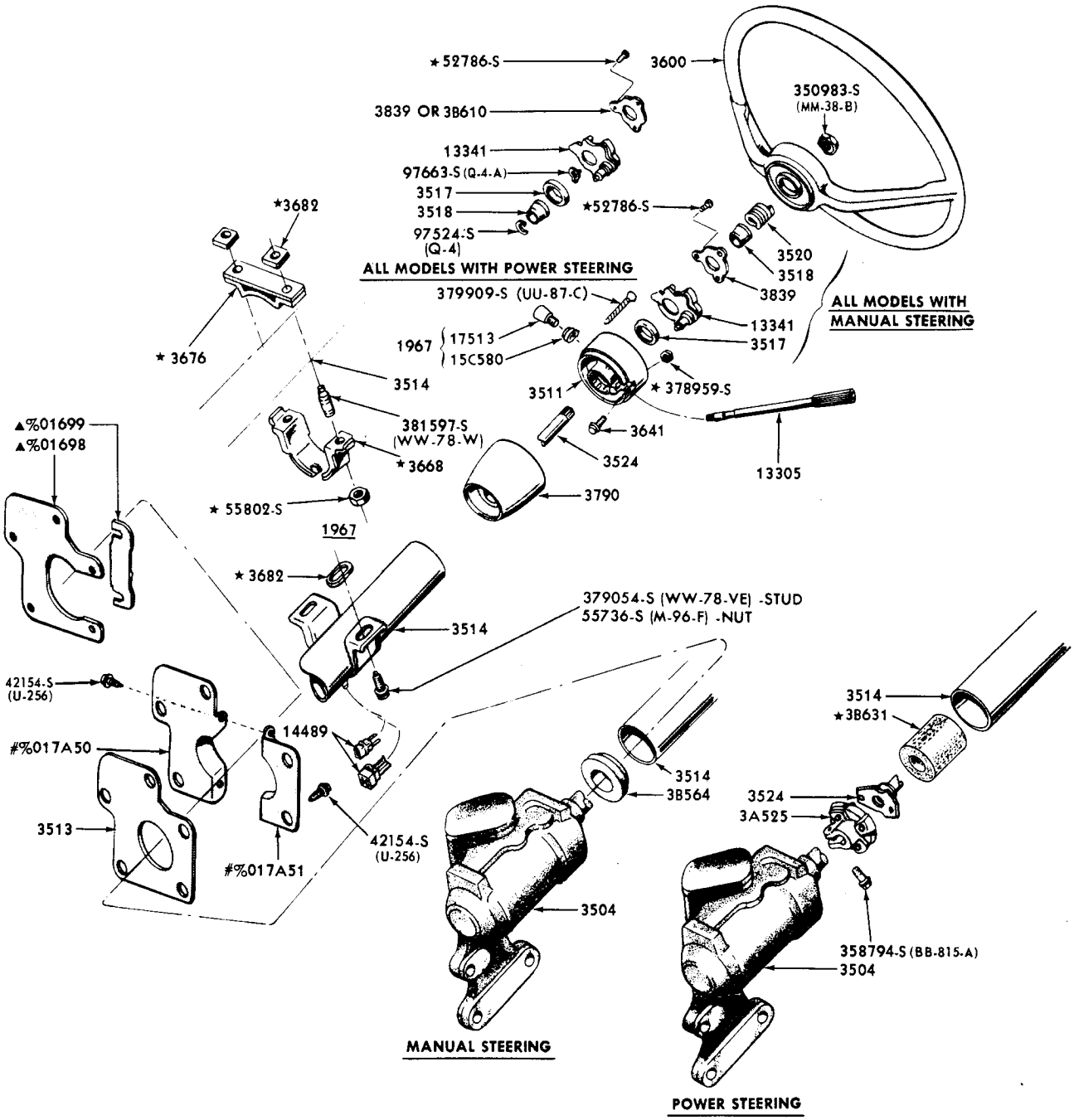


▲MANUAL STEERING FAIRLANE & COMET - POWER & MANUAL STEERING FALCON
#POWER STEERING FAIRLANE & COMET ONLY
%REFER TO BODY GROUP NUMBER

P-5138

STEERING COLUMN FOR FLOOR SHIFT
1966/67 FAIRLANE & FALCON


COPYRIGHT © 1975 — FORD MOTOR COMPANY — DEARBORN, MICHIGAN

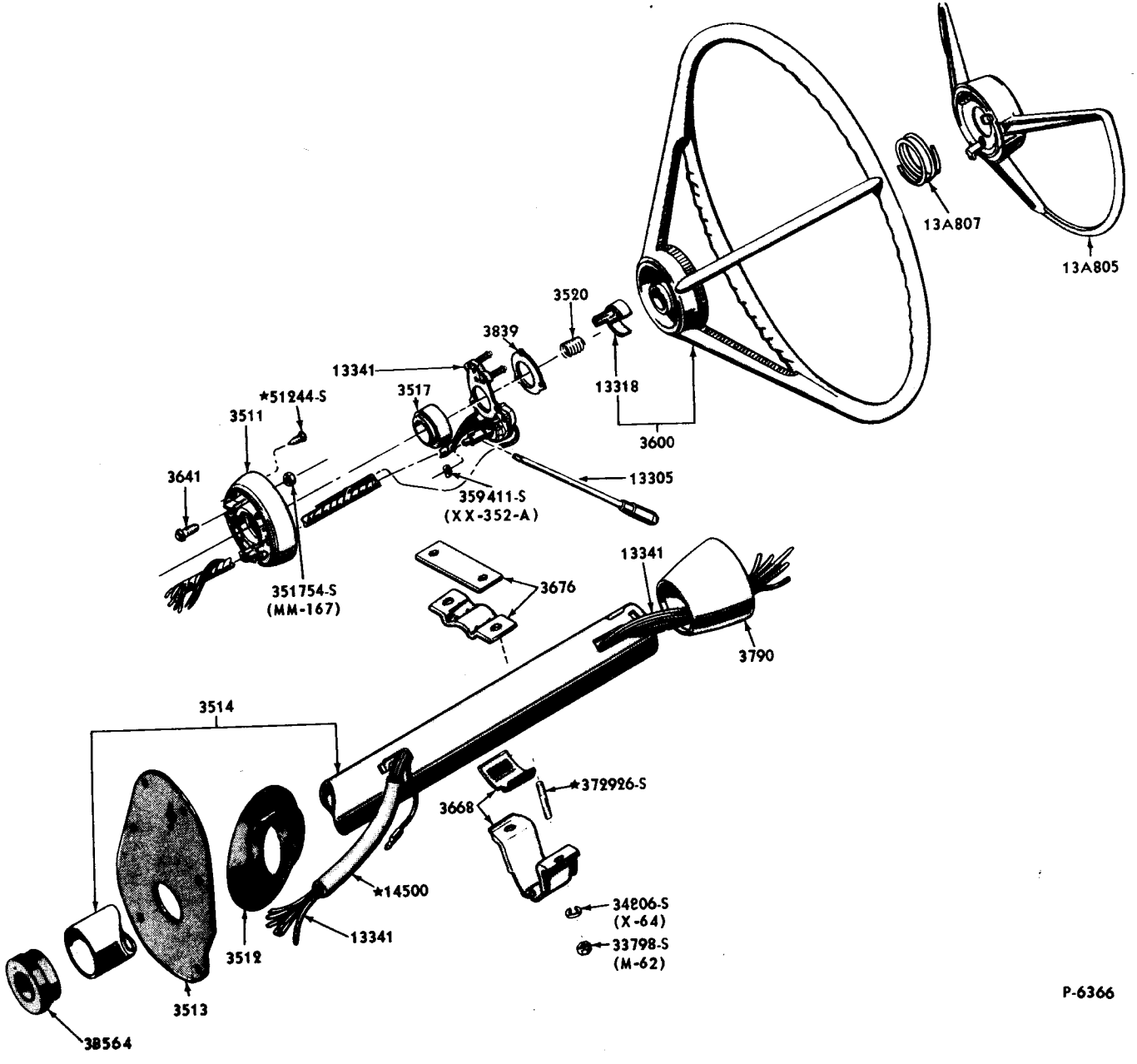


STEERING COLUMN FOR FLOOR SHIFT
1965 FALCON, 1965/66 MUSTANG

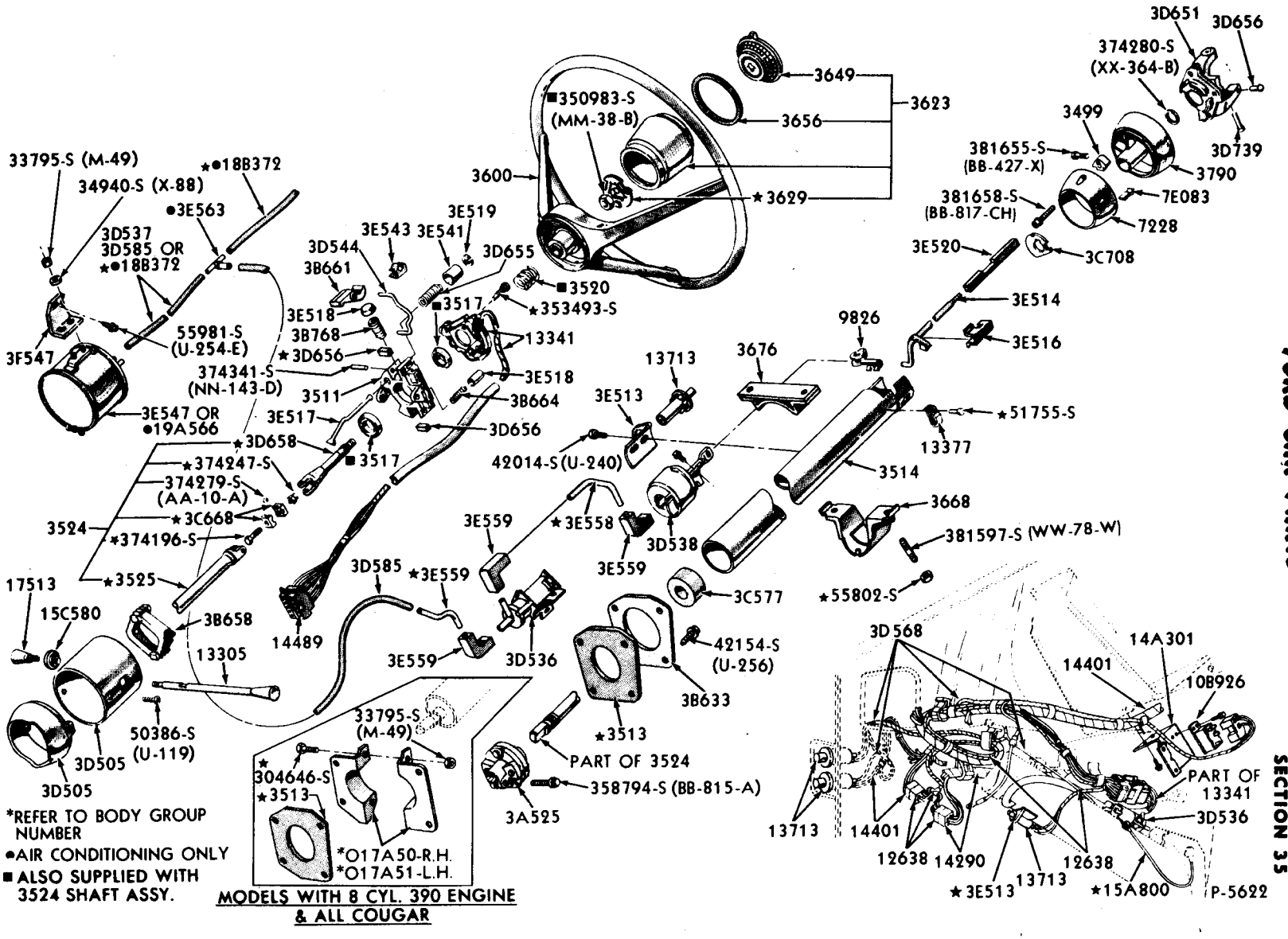


*REFER TO BODY GROUP NUMBER

●AIR CONDITIONING ONLY

■ALSO SUPPLIED WITH 3524 SHAFT ASSY.

MODELS WITH 8 CYL. 390 ENGINE & ALL COUGAR

STEERING COLUMN FOR FLOOR SHIFT - TILT WHEEL
1967 MUSTANG


COPYRIGHT © 1975 — FORD MOTOR COMPANY — DEARBORN, MICHIGAN

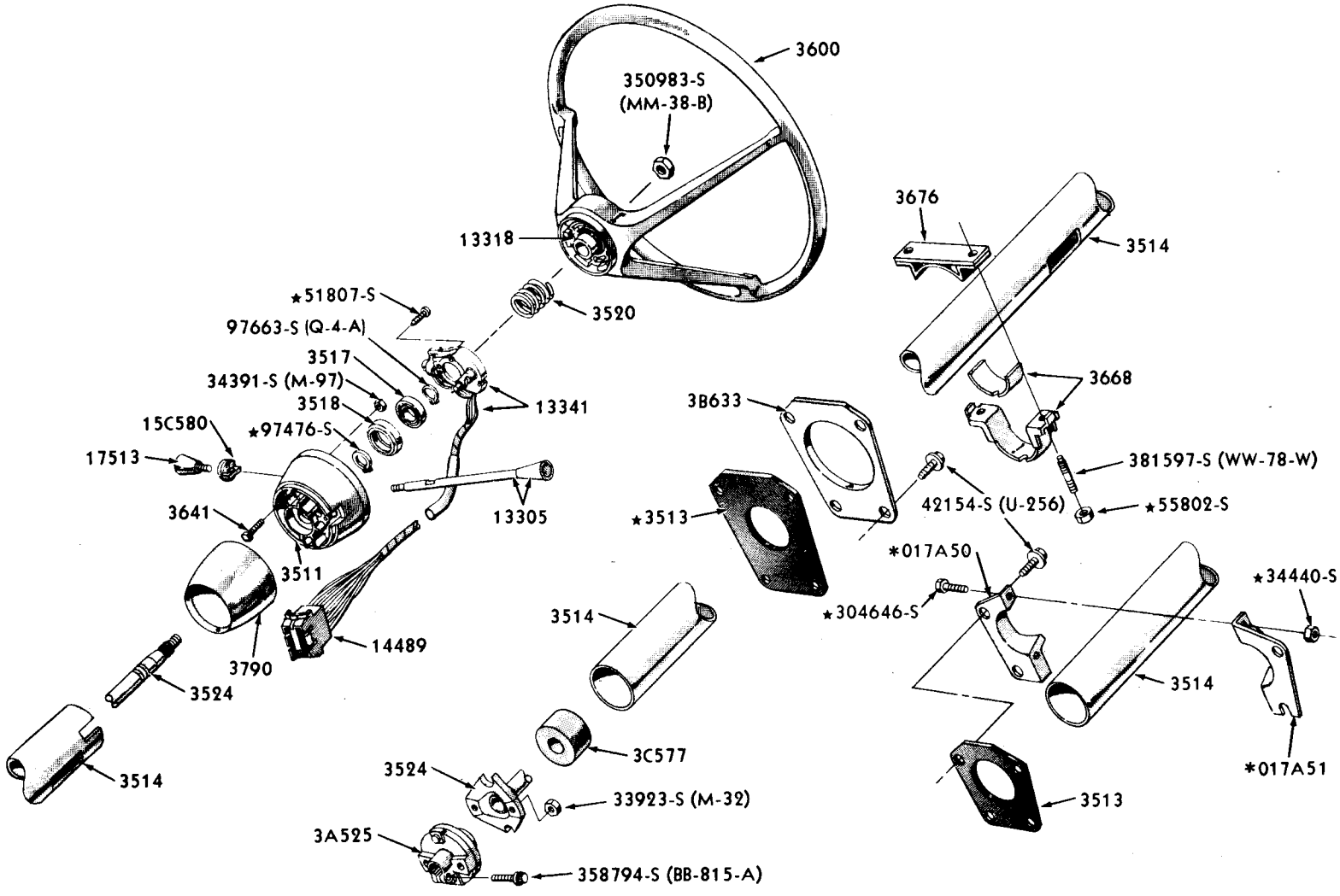


*REFER TO BODY GROUP NUMBER.

P-5710

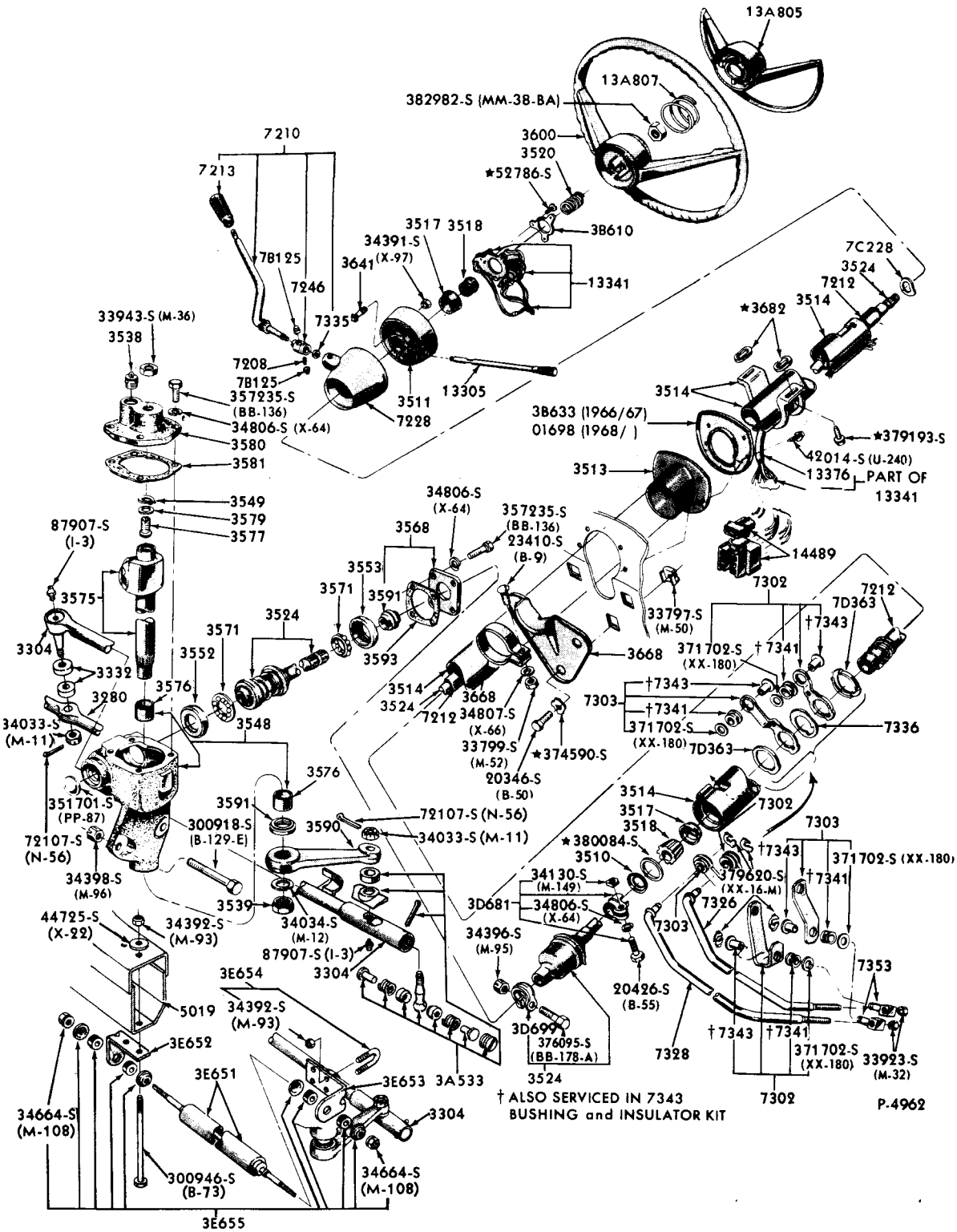


† ALSO SERVICED IN 7343 BUSHING and INSULATOR KIT

STEERING SHOCK ABSORBER INSTALLATION (1968/ )

STEERING COLUMN FOR MANUAL TRANSMISSION and MANUAL STEERING
1966/71 BRONCO


COPYRIGHT © 1975 — FORD MOTOR COMPANY — DEARBORN, MICHIGAN

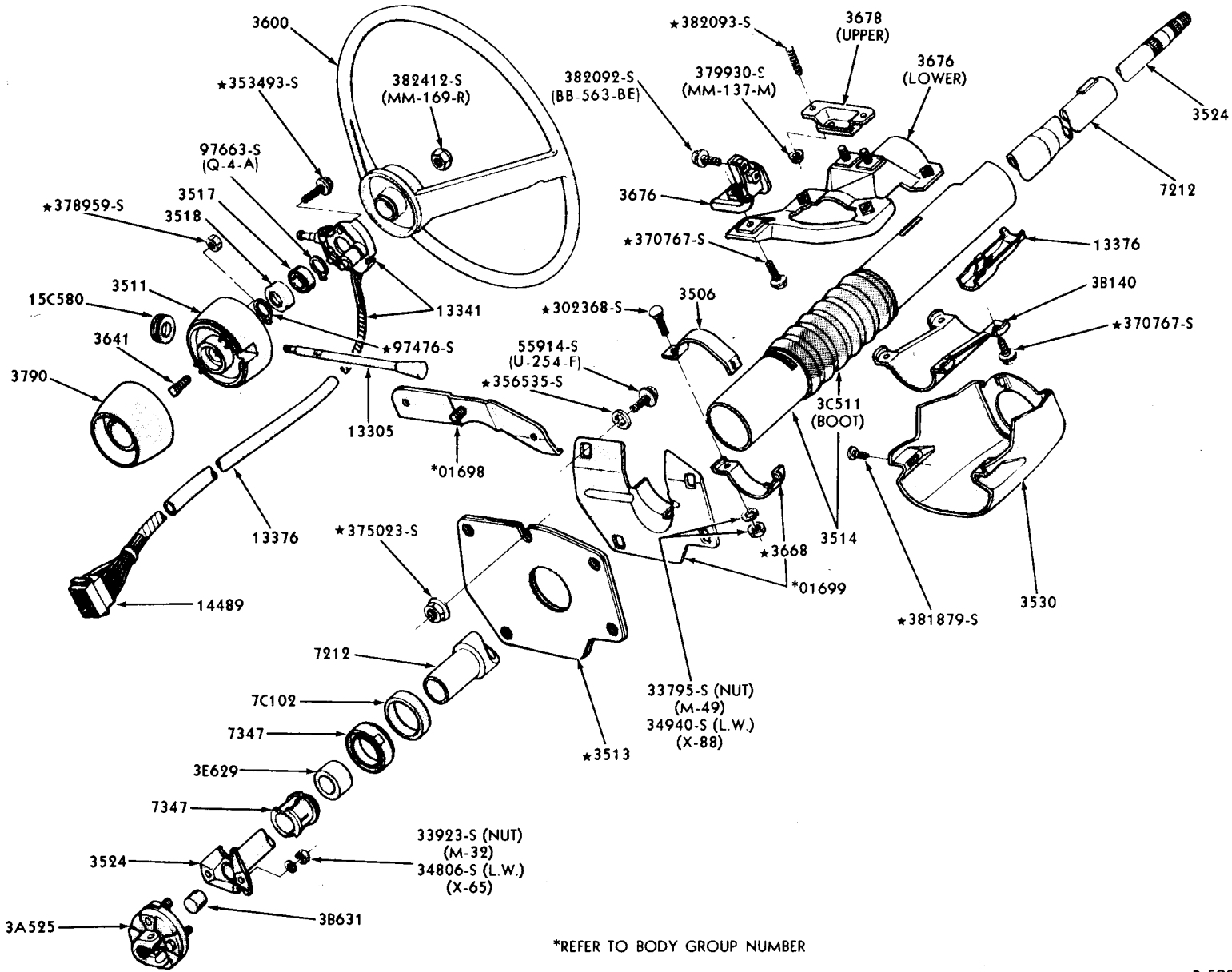


*REFER TO BODY GROUP NUMBER

P-5984

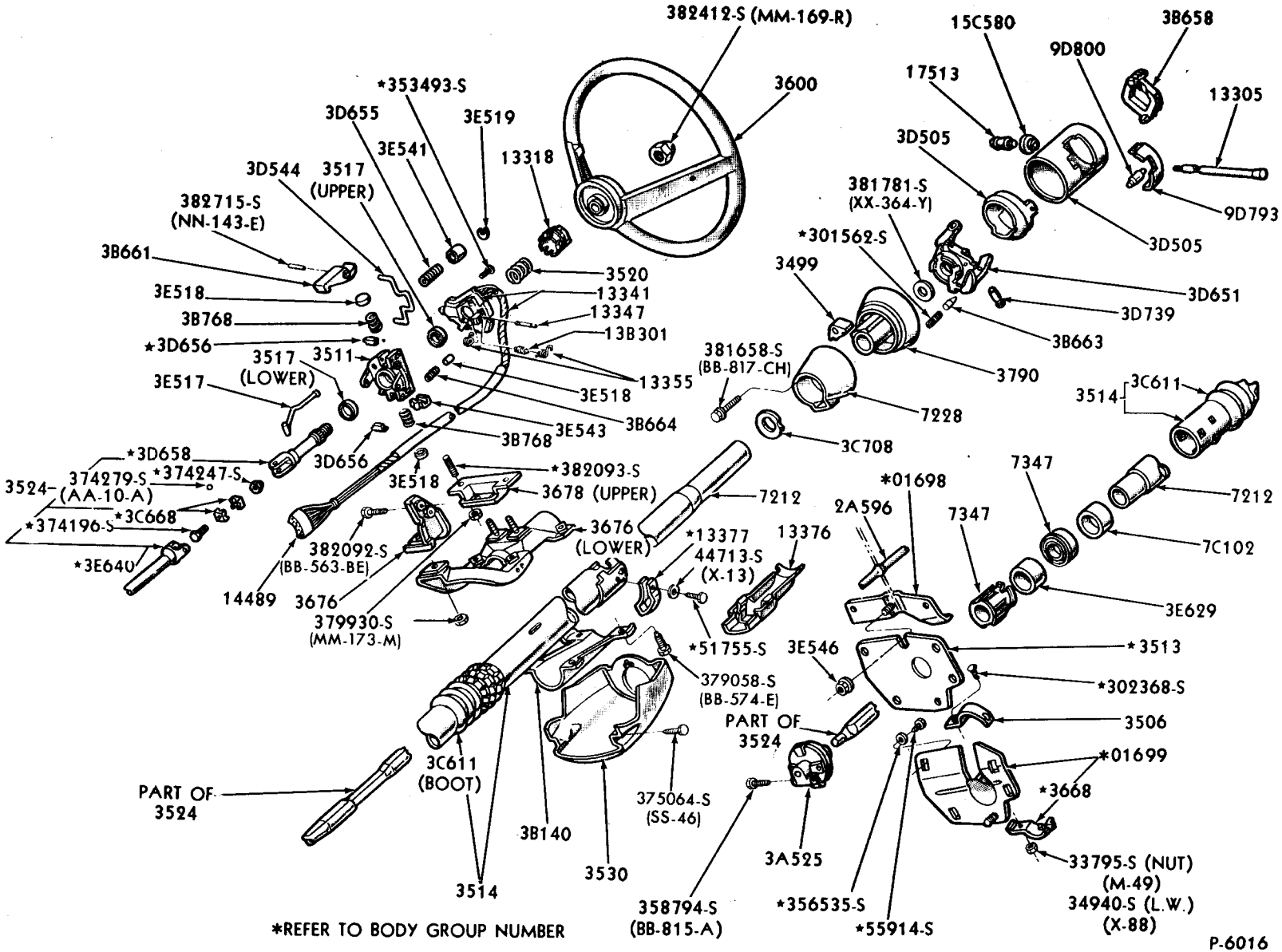


STEERING COLUMN FOR FLOOR SHIFT - TILT WHEEL
1968 FORD



COPYRIGHT © 1975 — FORD MOTOR COMPANY — DEARBORN, MICHIGAN

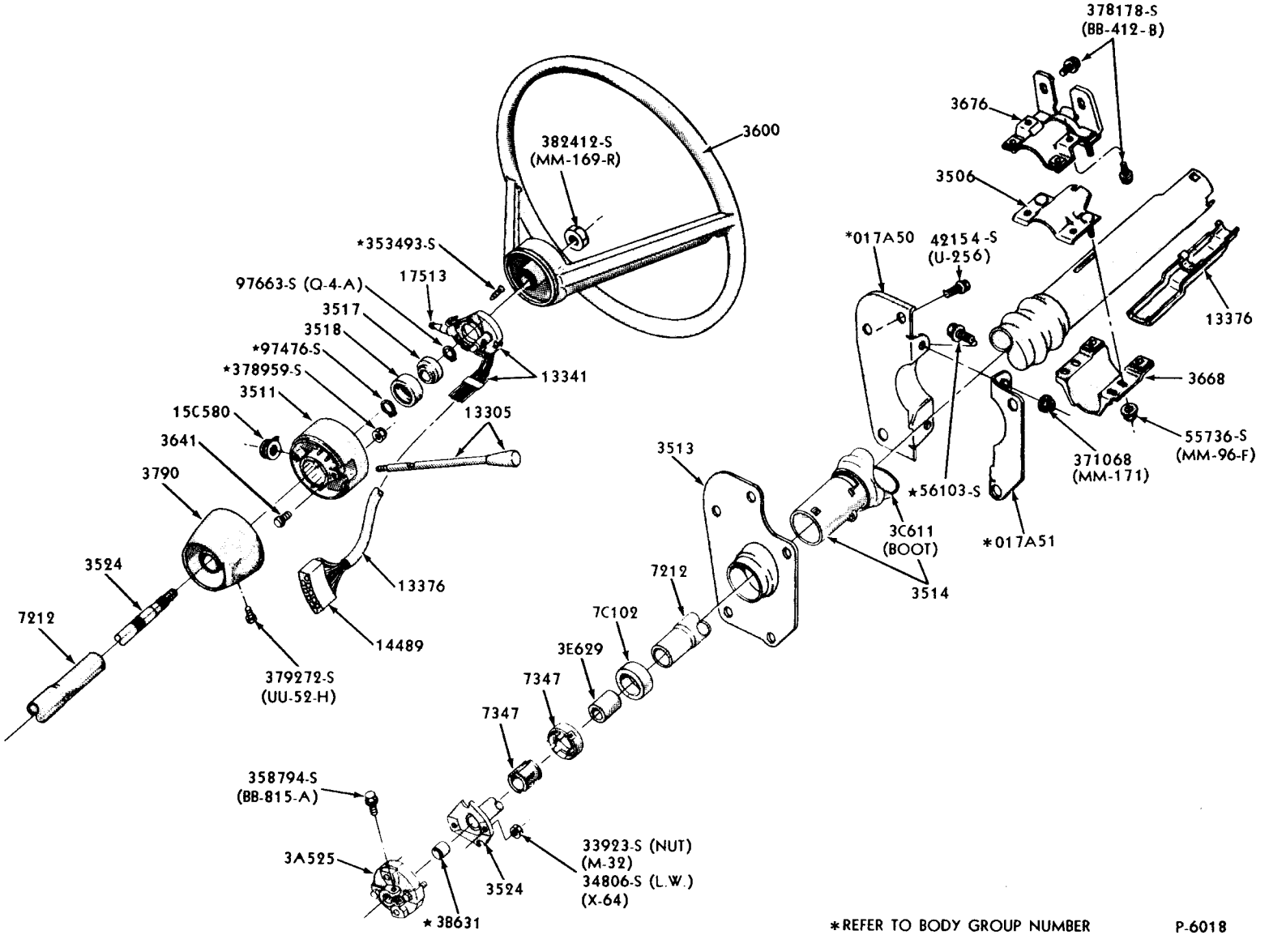


*REFER TO BODY GROUP NUMBER

P-6018

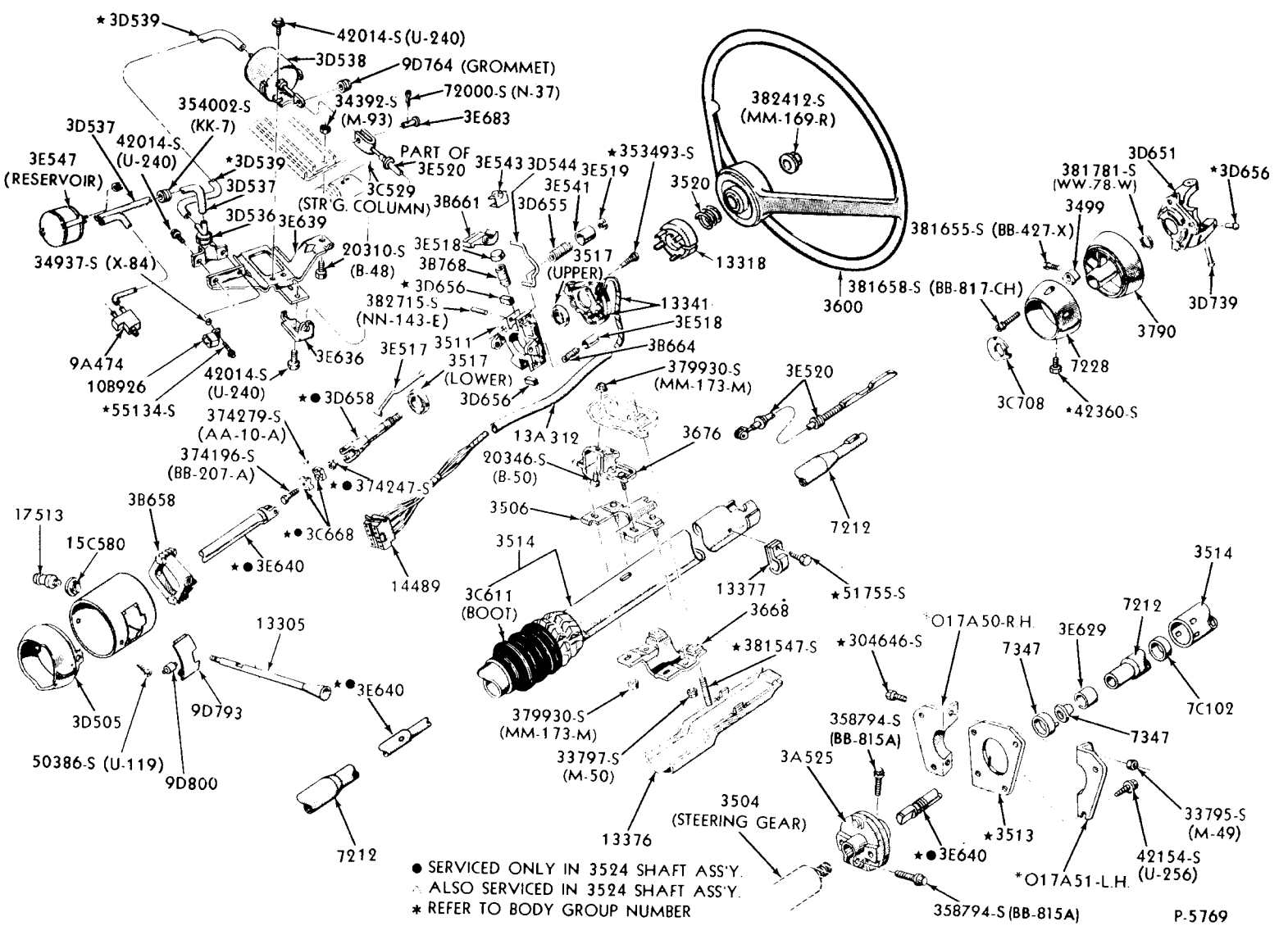


● SERVICED ONLY IN 3524 SHAFT ASS'Y.
∴ ALSO SERVICED IN 3524 SHAFT ASS'Y.
★ REFER TO BODY GROUP NUMBER

STEERING COLUMN FOR FLOOR SHIFT - TILT WHEEL
1968 MUSTANG

COPYRIGHT © 1975 — FORD MOTOR COMPANY — DEARBORN, MICHIGAN

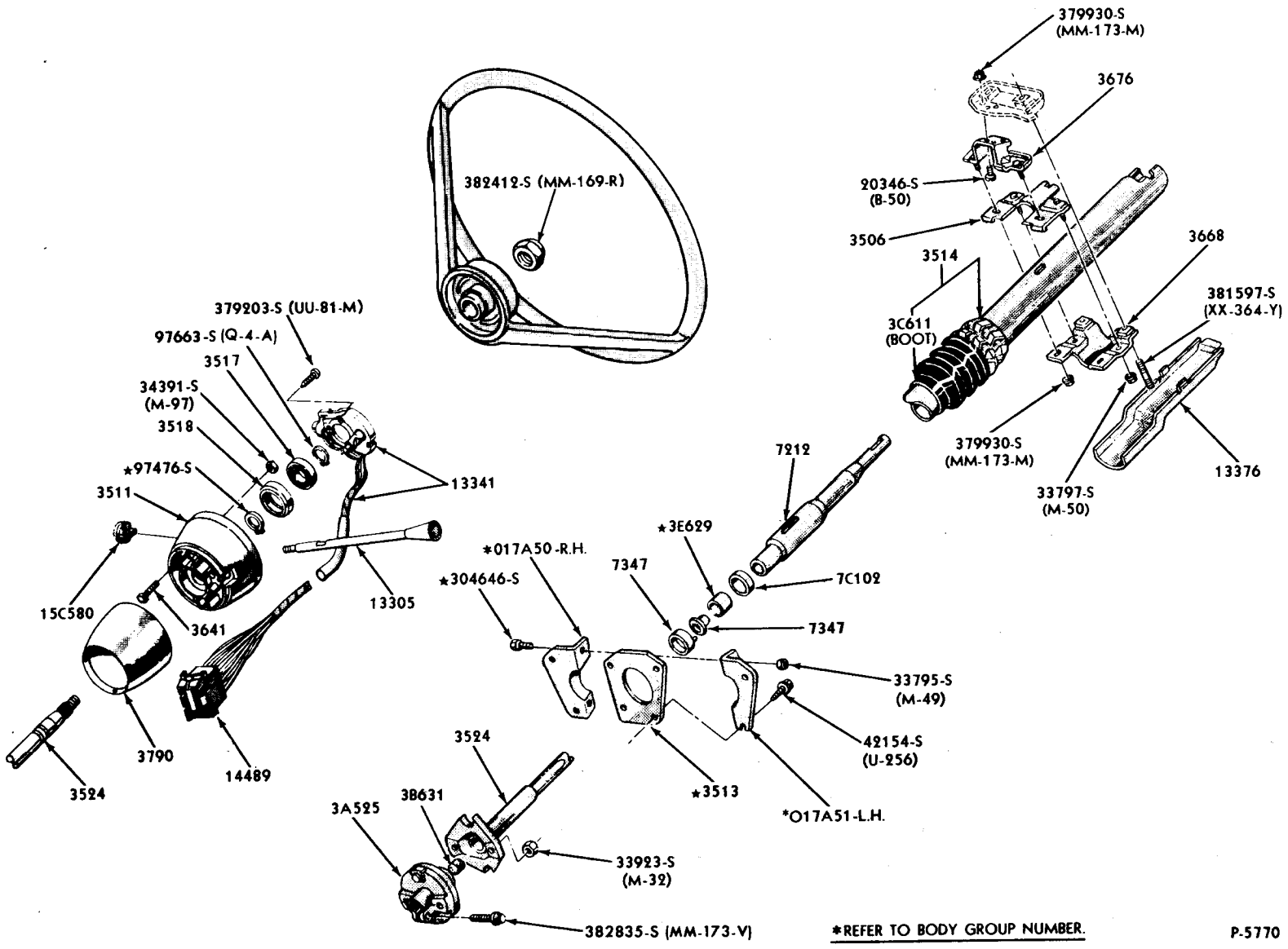


*REFER TO BODY GROUP NUMBER.

P-5770

STEERING COLUMN FOR FLOOR SHIFT - FIXED WHEEL
1968 MUSTANG

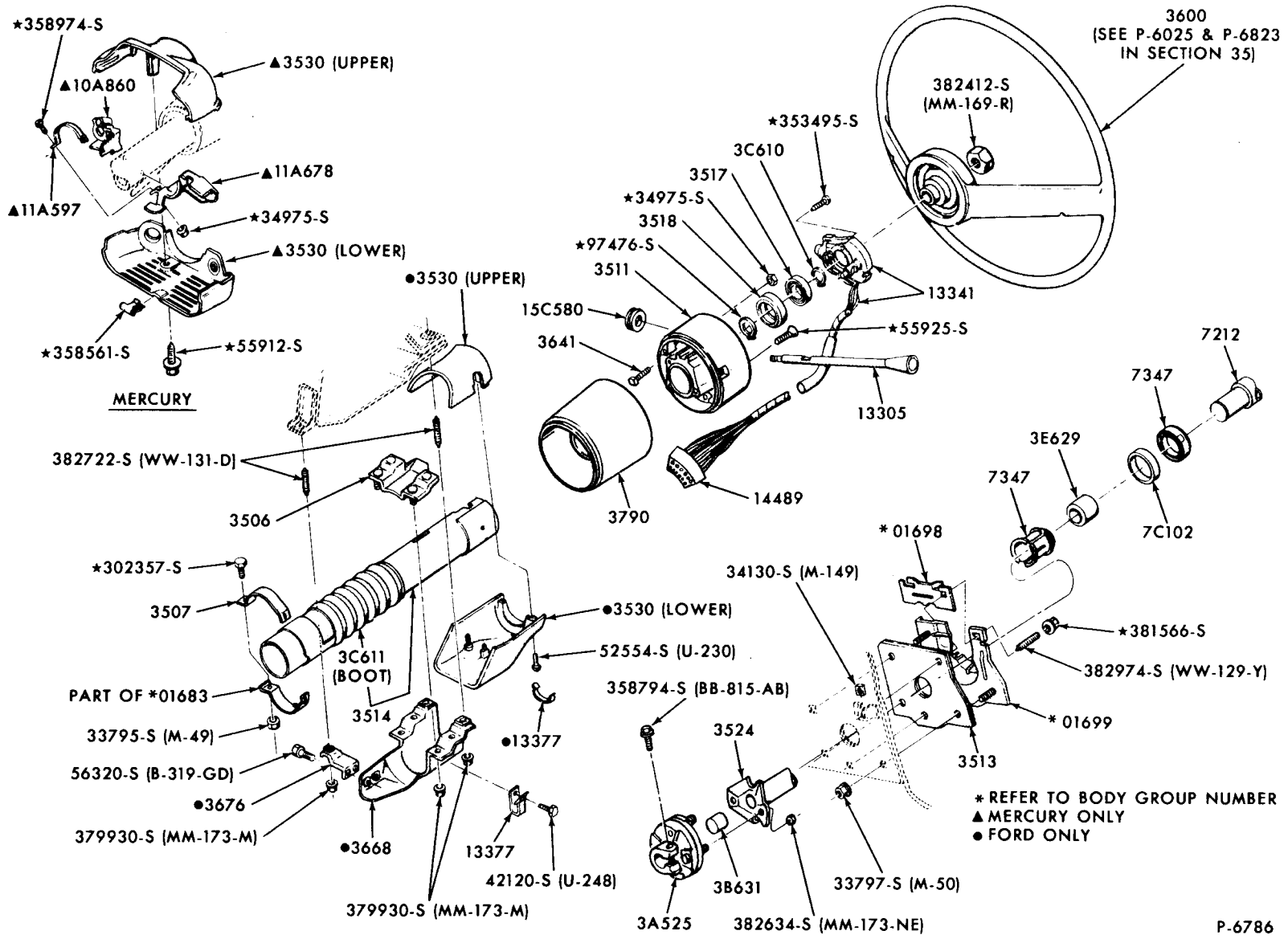


STEERING COLUMN FOR FLOOR SHIFT - FIXED WHEEL
1969 FORD


COPYRIGHT © 1975 — FORD MOTOR COMPANY — DEARBORN, MICHIGAN

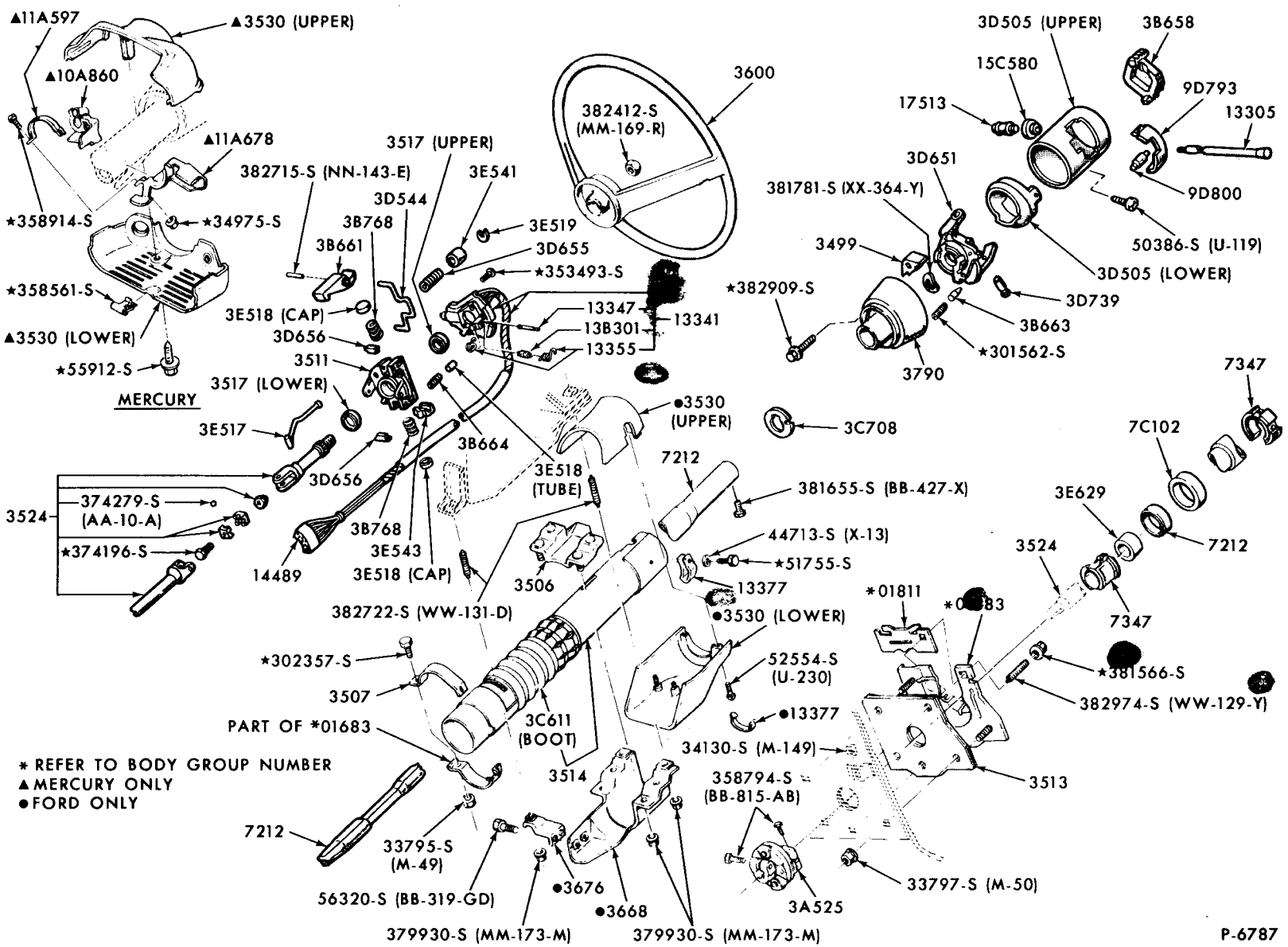
▲11A597
▲3530 (UPPER)
▲10A860
▲11A678
★358914-S
★34975-S
★358561-S
▲3530 (LOWER)
★55912-S
MERCURY
3517 (UPPER)
382715-S (NN-143-E)
3E541
3D544
3B768
3B661
3E519
3D655
★353493-S
3E518 (CAP)
3D656
3511
13347
13B301
13355
13341
3517 (LOWER)
3E517
3B664
3E518 (TUBE)
3D656
374279-S (AA-10-A)
3524
★374196-S
14489
3B768
3E543
3E518 (CAP)
3506
382722-S (WW-131-D)
★302357-S
3507
PART OF *01683
3C611 (BOOT)
3514
7212
33795-S (M-49)
56320-S (BB-319-GD)
●3676
●3668
379930-S (MM-173-M)
379930-S (MM-173-M)
382412-S (MM-169-R)
3600
●3530 (UPPER)
7212
381655-S (BB-427-X)
44713-S (X-13)
★51755-S
13377
●3530 (LOWER)
52554-S (U-230)
●13377
34130-S (M-149)
358794-S (BB-815-AB)
3A525
33797-S (M-50)
3513
*01811
*01683
★381566-S
382974-S (WW-129-Y)
3524
7347
3E629
7212
7C102
7347
3C708
3790
★301562-S
3B663
3D739
★382909-S
3499
381781-S (XX-364-Y)
3D651
3D505 (LOWER)
50386-S (U-119)
9D800
13305
9D793
17513
15C580
3D505 (UPPER)
3B658
* REFER TO BODY GROUP NUMBER
▲ MERCURY ONLY
● FORD ONLY
P-6787

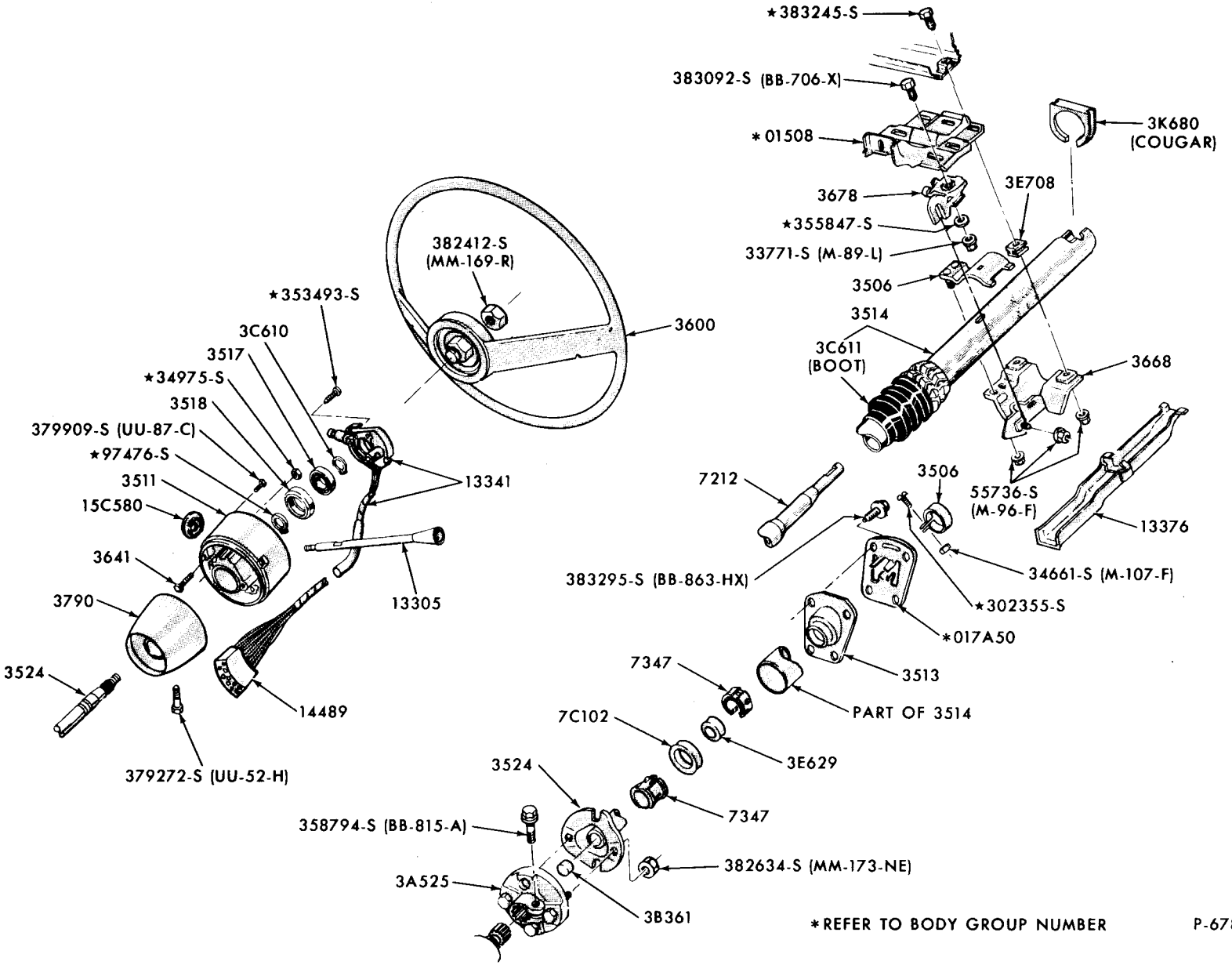


★REFER TO BODY GROUP NUMBER

P-6781

STEERING COLUMN FOR FLOOR SHIFT - FIXED WHEEL
1969 MUSTANG

COPYRIGHT © 1975 — FORD MOTOR COMPANY — DEARBORN, MICHIGAN

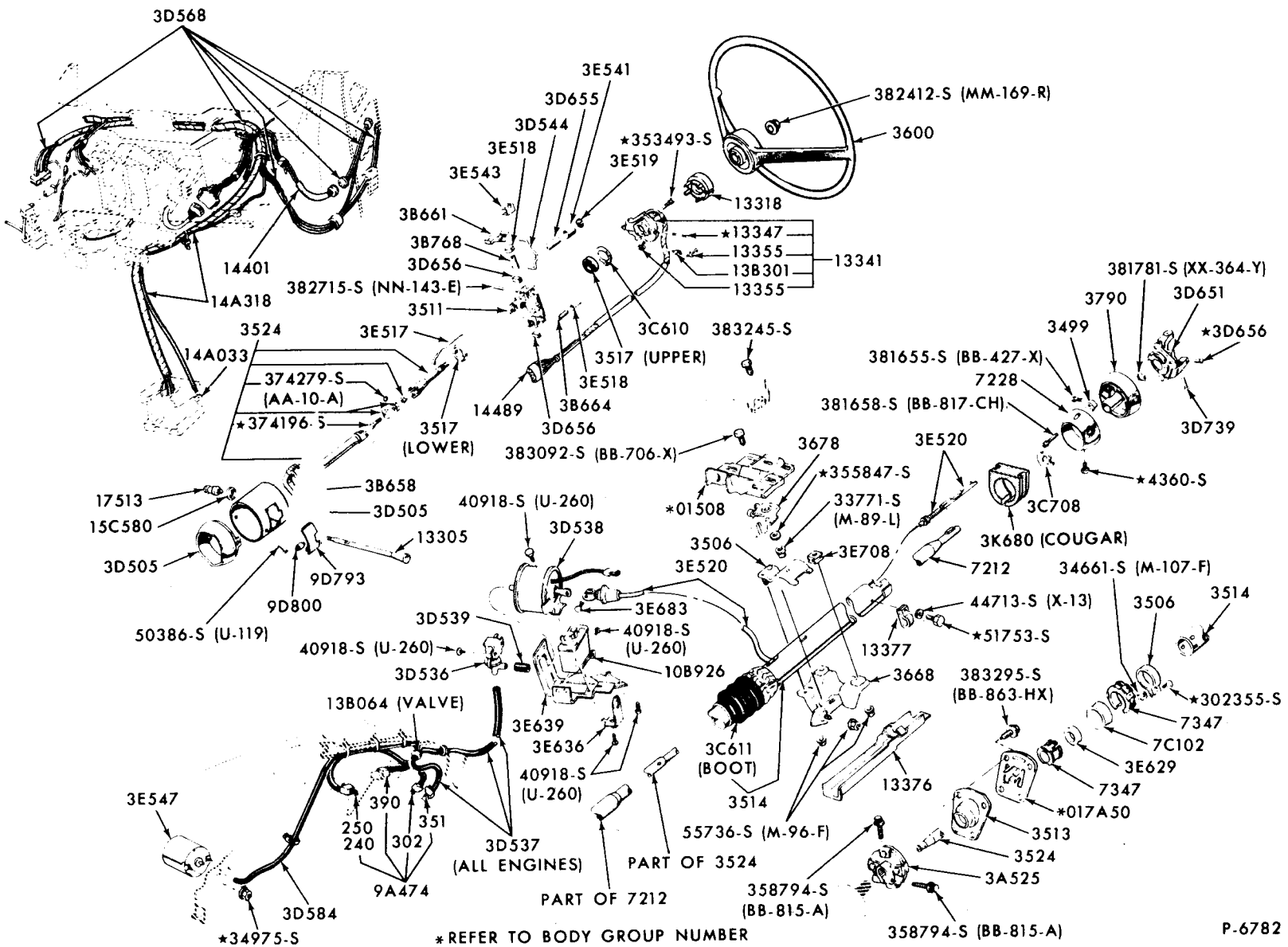
3D568
14401
14A318
3524
14A033
374279-S (AA-10-A)
*374196-S
3E517
3517 (LOWER)
3B658
3D505
17513
15C580
3D505
13305
9D793
9D800
50386-S (U-119)
3E541
3D655
3D544
3E518
3E543
3B661
3B768
3D656
382715-S (NN-143-E)
3511
14489
3D656
3B664
3E518
3517 (UPPER)
3C610
*353493-S
3E519
13318
*13347
13355
13B301
13355
13341
382412-S (MM-169-R)
3600
383245-S
383092-S (BB-706-X)
3678
*01508
*355847-S
33771-S (M-89-L)
40918-S (U-260)
3D538
3506
3E708
3E520
3E683
40918-S (U-260)
3D539
40918-S (U-260)
3D536
10B926
3E639
3E636
40918-S (U-260)
13B064 (VALVE)
3E547
390
250
240
302
351
3D537 (ALL ENGINES)
9A474
3D584
*34975-S
PART OF 7212
PART OF 3524
3C611 (BOOT)
3514
55736-S (M-96-F)
358794-S (BB-815-A)
358794-S (BB-815-A)
13376
3668
13377
44713-S (X-13)
*51753-S
7212
3E520
3K680 (COUGAR)
3C708
*4360-S
381655-S (BB-427-X)
7228
381658-S (BB-817-CH)
3499
3790
381781-S (XX-364-Y)
3D651
*3D656
3D739
34661-S (M-107-F)
3506
3514
*302355-S
7347
7C102
3E629
7347
*017A50
3513
3524
3A525
383295-S (BB-863-HX)
*REFER TO BODY GROUP NUMBER
P-6782

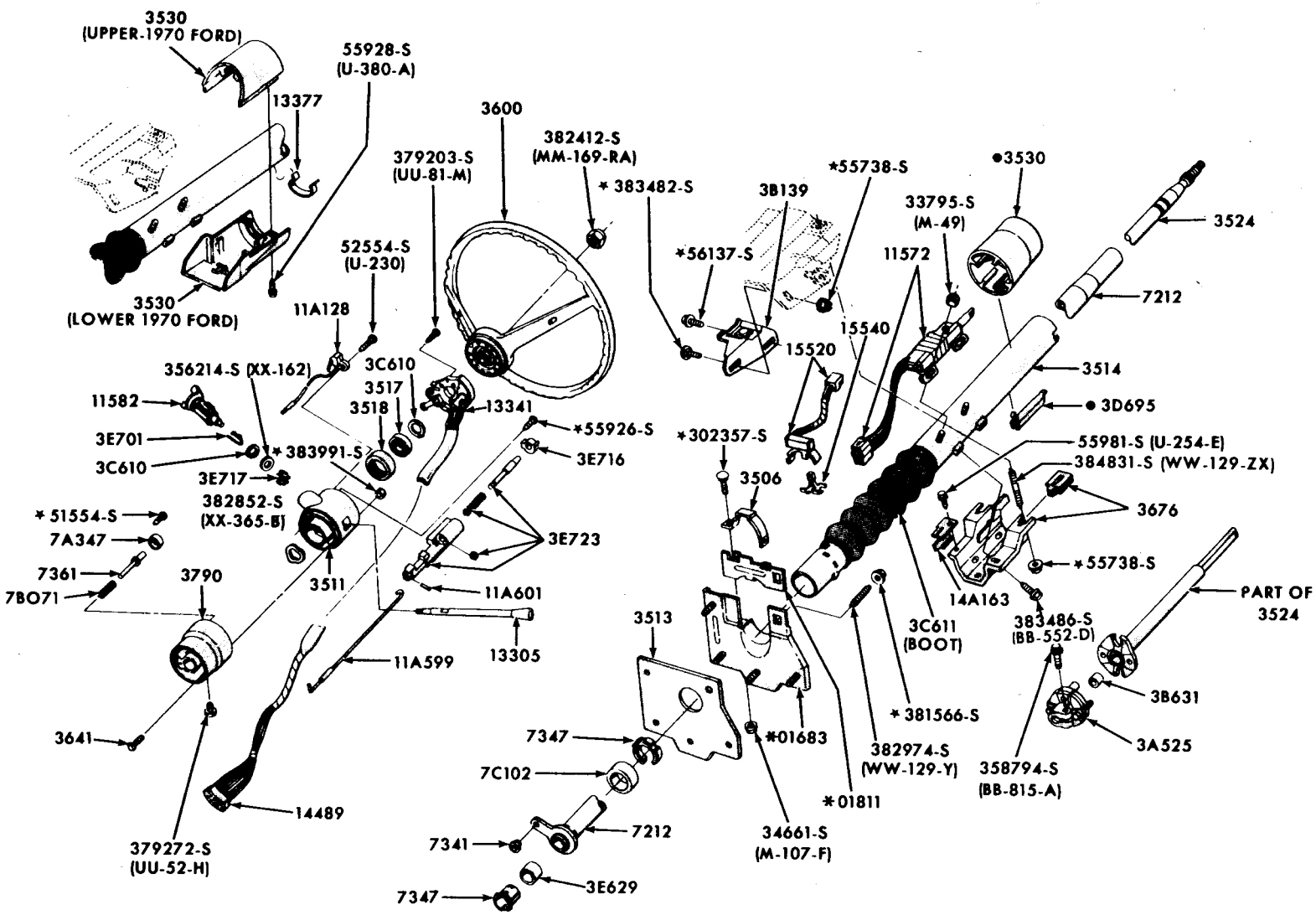


• MERCURY(1970/71) FORD(1971)
* REFER TO BODY GROUP NUMBER

P-7243

STEERING COLUMN FOR FLOOR SHIFT - FIXED WHEEL
1970/71 FORD


COPYRIGHT © 1975 — FORD MOTOR COMPANY — DEARBORN, MICHIGAN

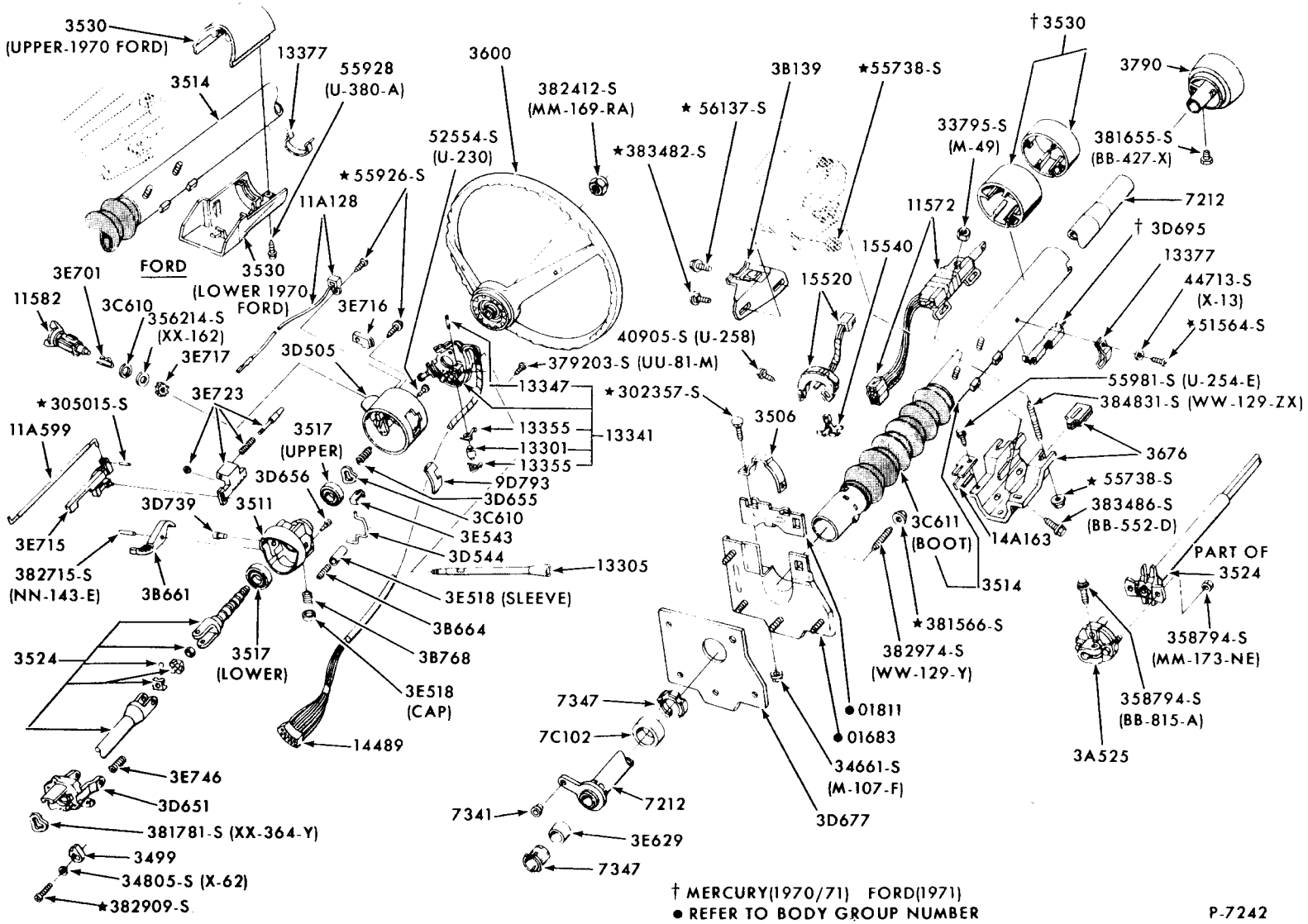


† MERCURY(1970/71) FORD(1971)
● REFER TO BODY GROUP NUMBER

P-7242

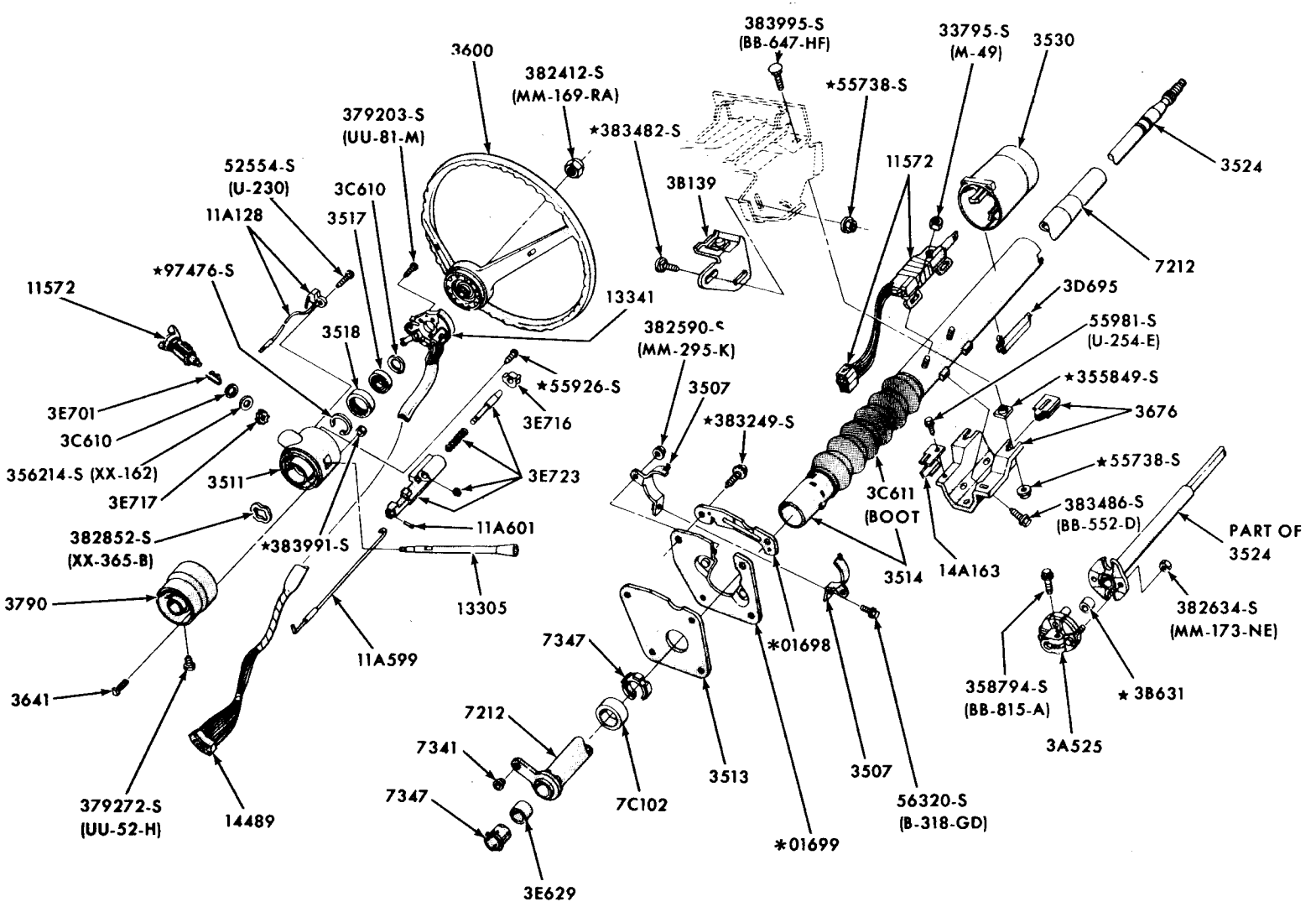


*REFER TO BODY GROUP NUMBER

P-7248

STEERING COLUMN FOR FLOOR SHIFT
1970/71 FAIRLANE/TORINO

COPYRIGHT © 1975 — FORD MOTOR COMPANY — DEARBORN, MICHIGAN

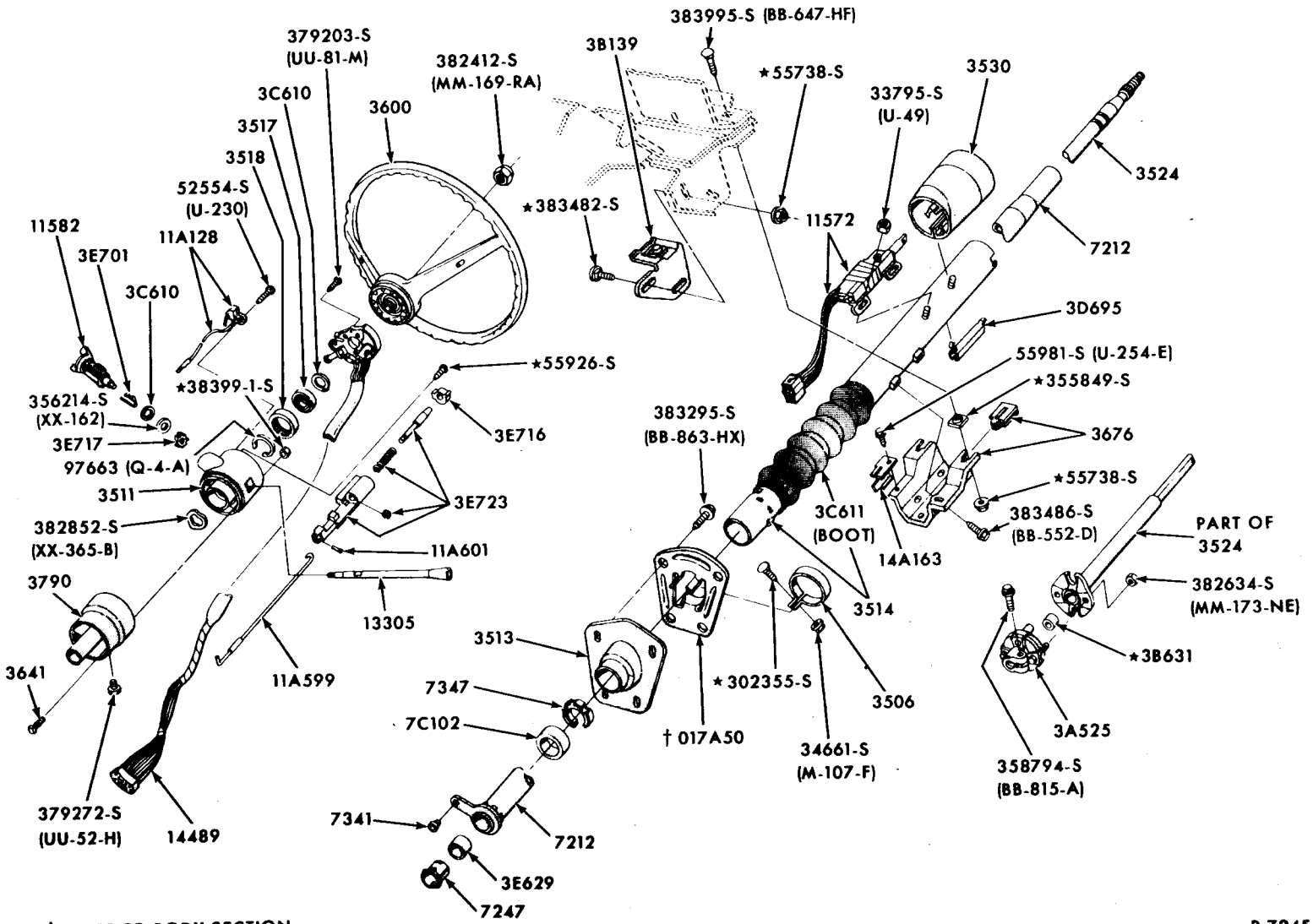


† REFER TO BODY SECTION

P-7245

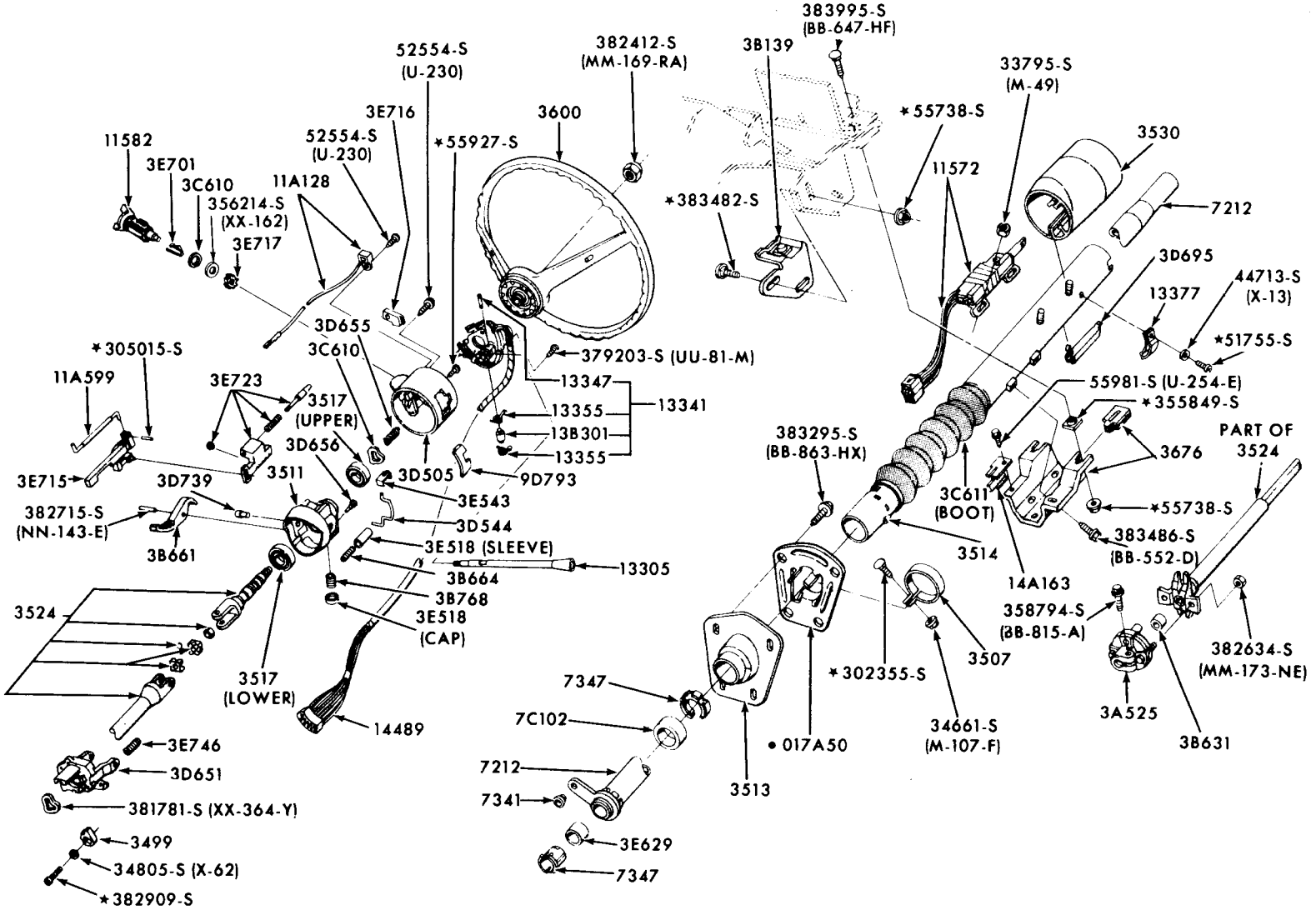


• REFER TO BODY SECTION

P-7246

STEERING COLUMN FOR FLOOR SHIFT - TILT WHEEL
1970/72 MUSTANG


COPYRIGHT © 1975 — FORD MOTOR COMPANY — DEARBORN, MICHIGAN

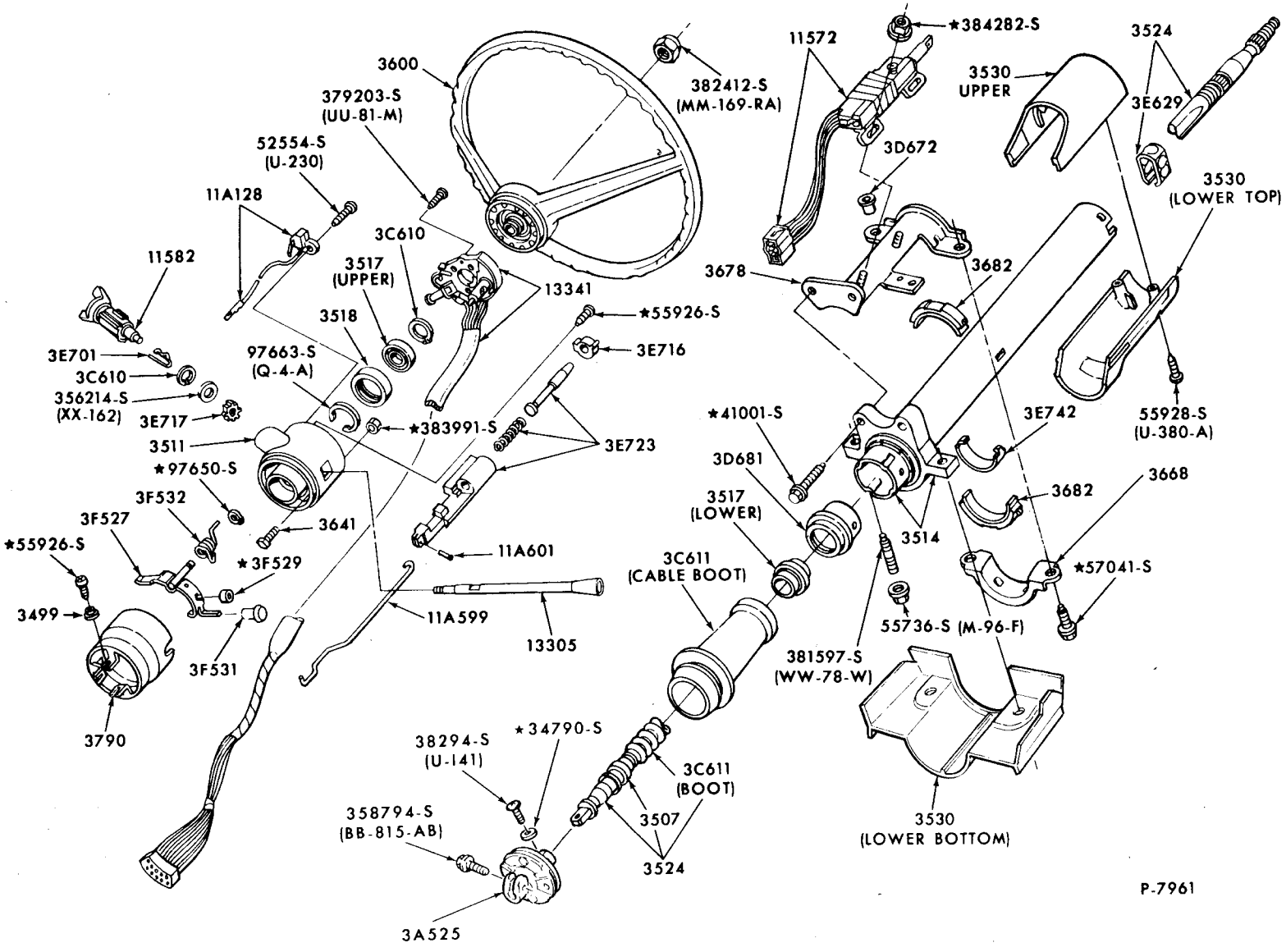
3600
379203-S (UU-81-M)
52554-S (U-230)
11A128
11582
3C610
3517 (UPPER)
3518
13341
97663-S (Q-4-A)
3E701
3C610
356214-S (XX-162)
3E717
3511
★97650-S
3F532
3F527
★55926-S
3499
3790
3F531
★3F529
3641
★383991-S
★55926-S
3E716
3E723
11A601
11A599
13305
382412-S (MM-169-RA)
11572
★384282-S
3D672
3678
3682
3524
3530 UPPER
3E629
3530 (LOWER TOP)
55928-S (U-380-A)
★41001-S
3D681
3517 (LOWER)
3C611 (CABLE BOOT)
3E742
3682
3668
3514
★57041-S
55736-S (M-96-F)
381597-S (WW-78-W)
3530 (LOWER BOTTOM)
38294-S (U-141)
★34790-S
358794-S (BB-815-AB)
3A525
3C611 (BOOT)
3507
3524
P-7961

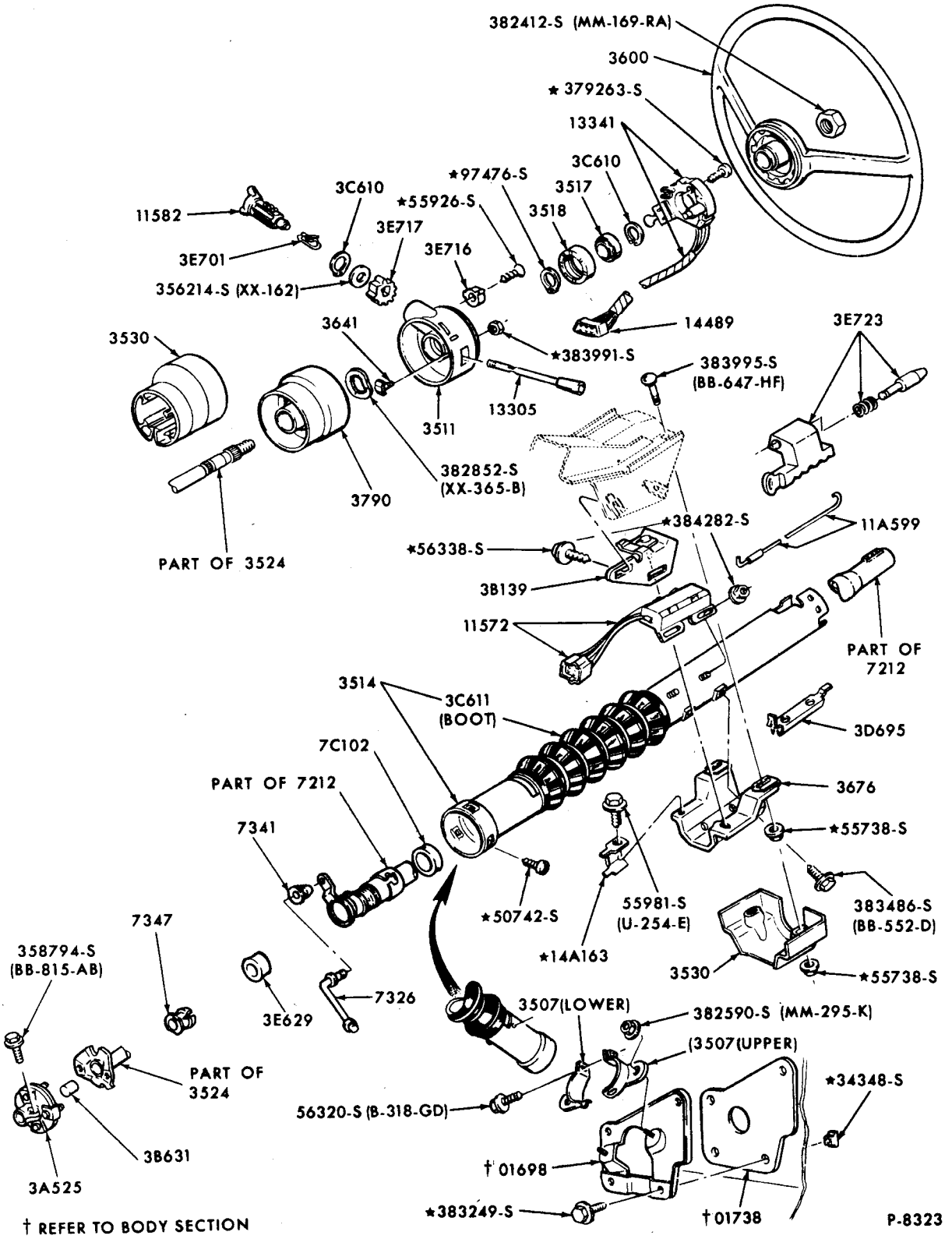


† REFER TO BODY SECTION

STEERING COLUMN FOR FLOOR SHIFT
1971/72 MAVERICK


COPYRIGHT © 1975 — FORD MOTOR COMPANY — DEARBORN, MICHIGAN

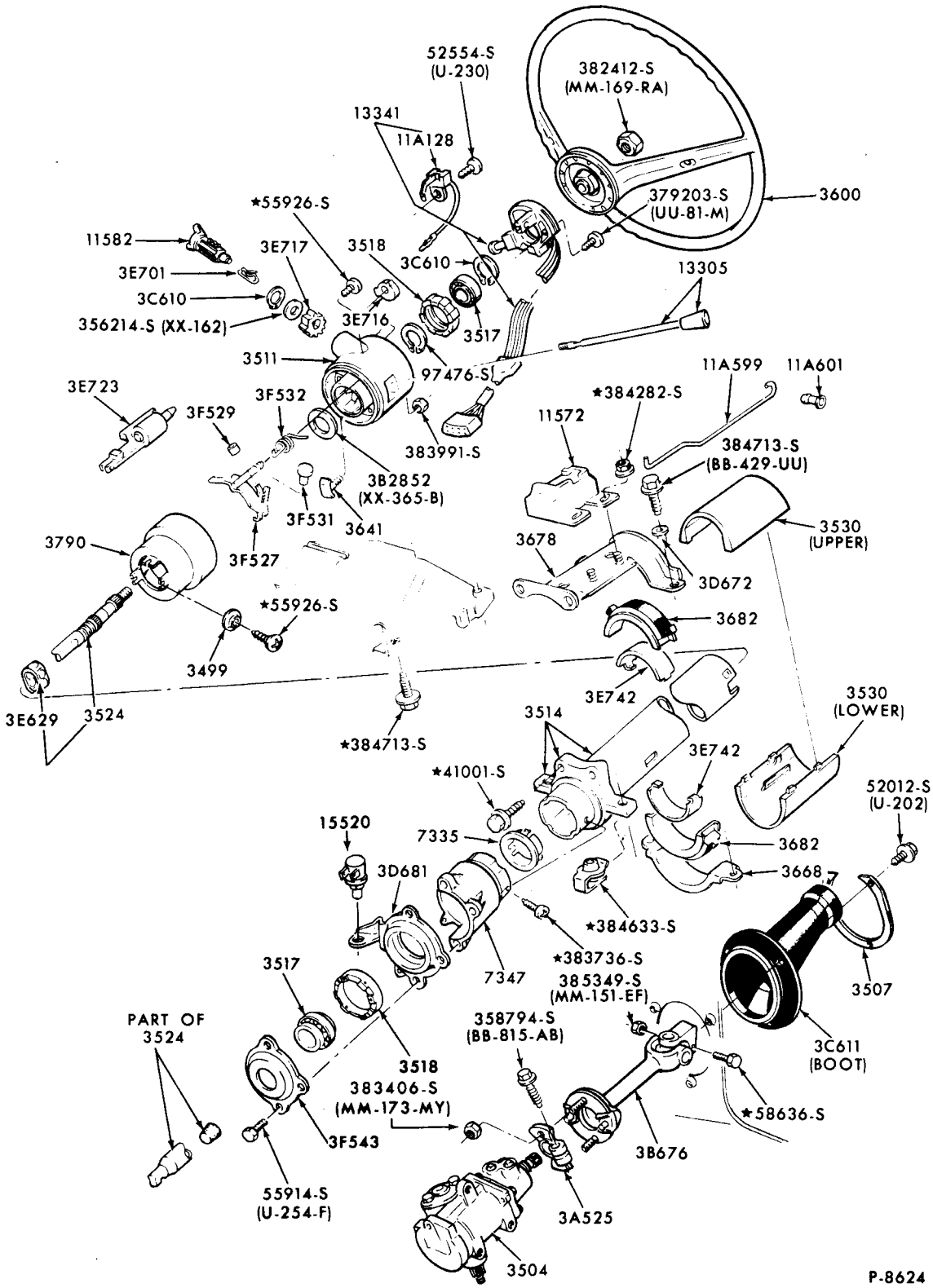


STEERING COLUMN FOR FLOOR SHIFT
1972 TORINO

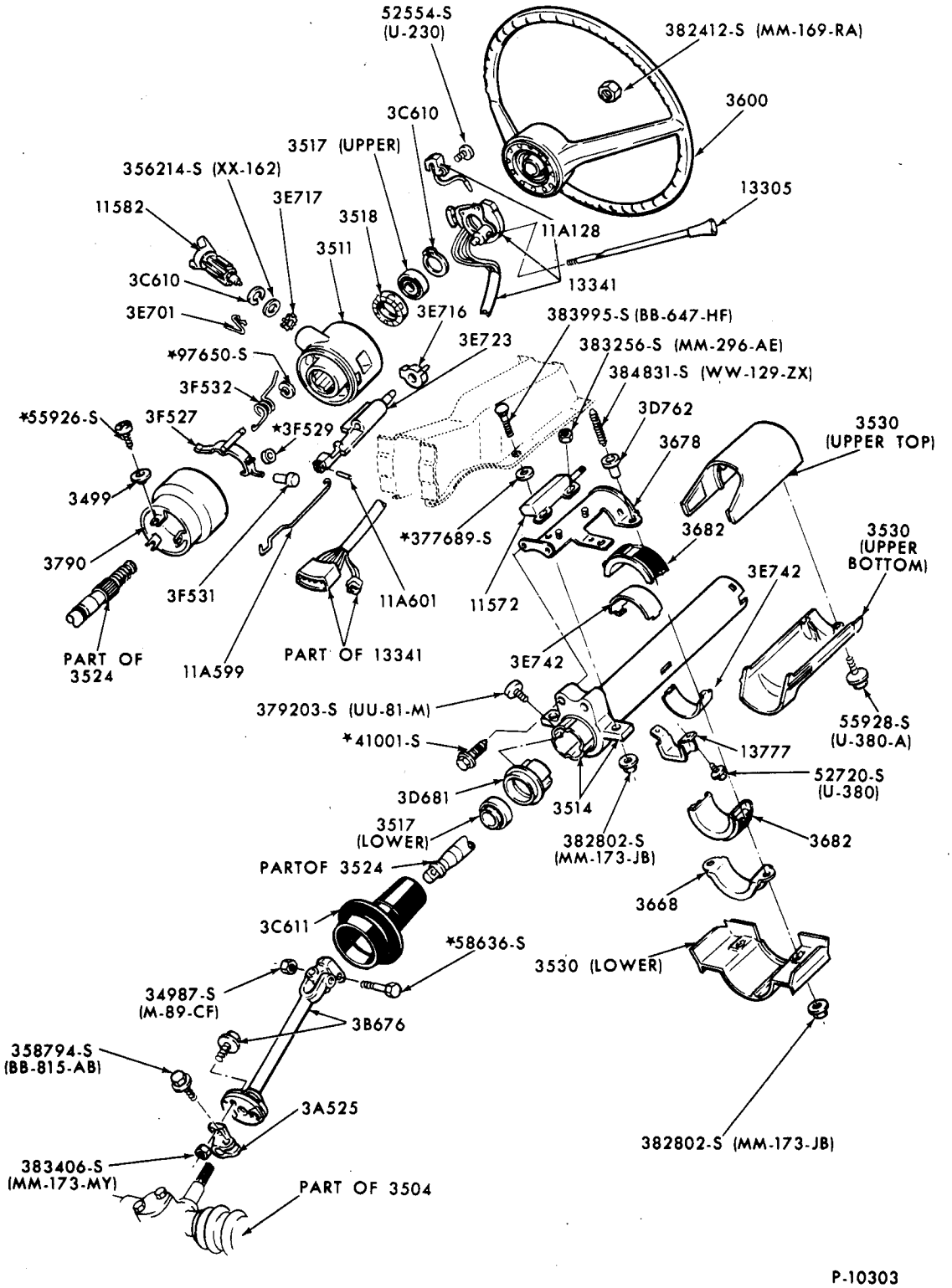


STEERING COLUMN FOR FLOOR SHIFT
1972 PINTO - "FROM 1/7/72"


COPYRIGHT © 1975 — FORD MOTOR COMPANY — DEARBORN, MICHIGAN

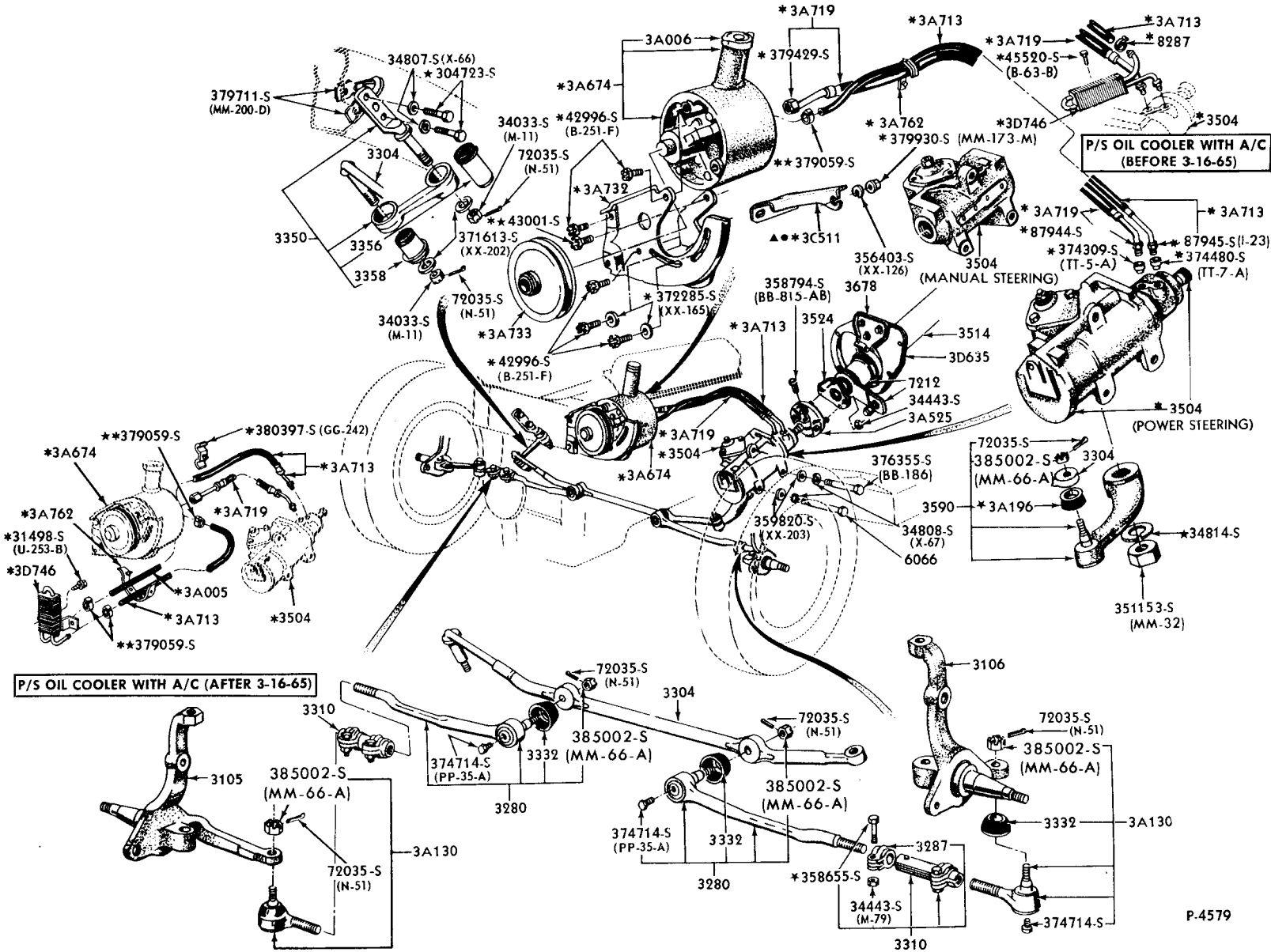


*POWER STEERING ONLY
●6 CYLINDER 240 C.I.D. ENGINE ONLY ▲1965/66 ONLY
■USED WITHOUT A/C

POWER STEERING SYSTEM
(TYPICAL FOR MANUAL STEERING LINKAGE)
1965/66 FORD


COPYRIGHT © 1975 — FORD MOTOR COMPANY — DEARBORN, MICHIGAN

■ SUPPLIED IN 3C651 BOOT & INSULATOR KIT
* SUPPLIED ONLY IN 3A730 VALVE ASSEMBLY
▲ ALSO SUPPLIED IN 3C651 BOOT & INSULATOR KIT

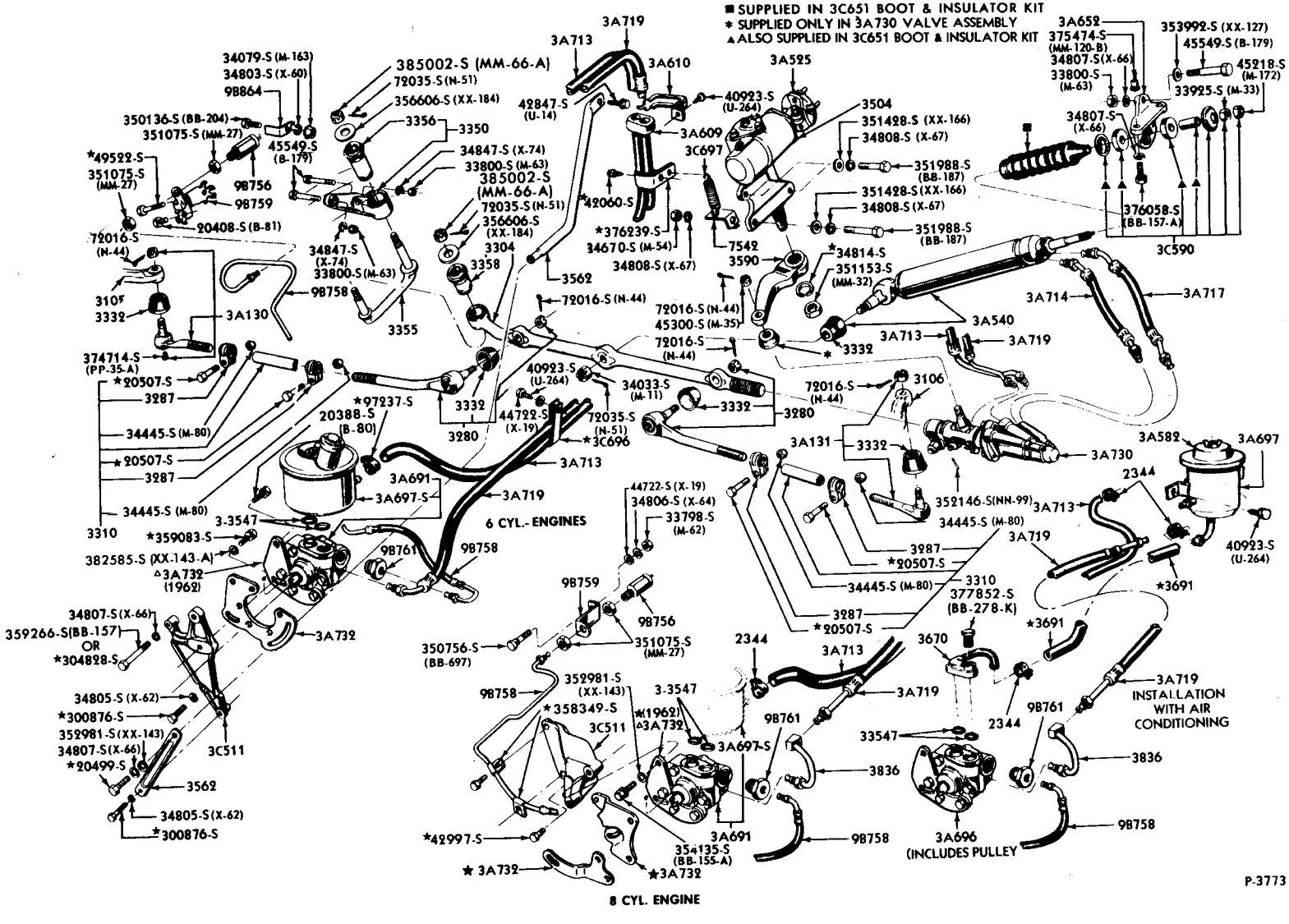

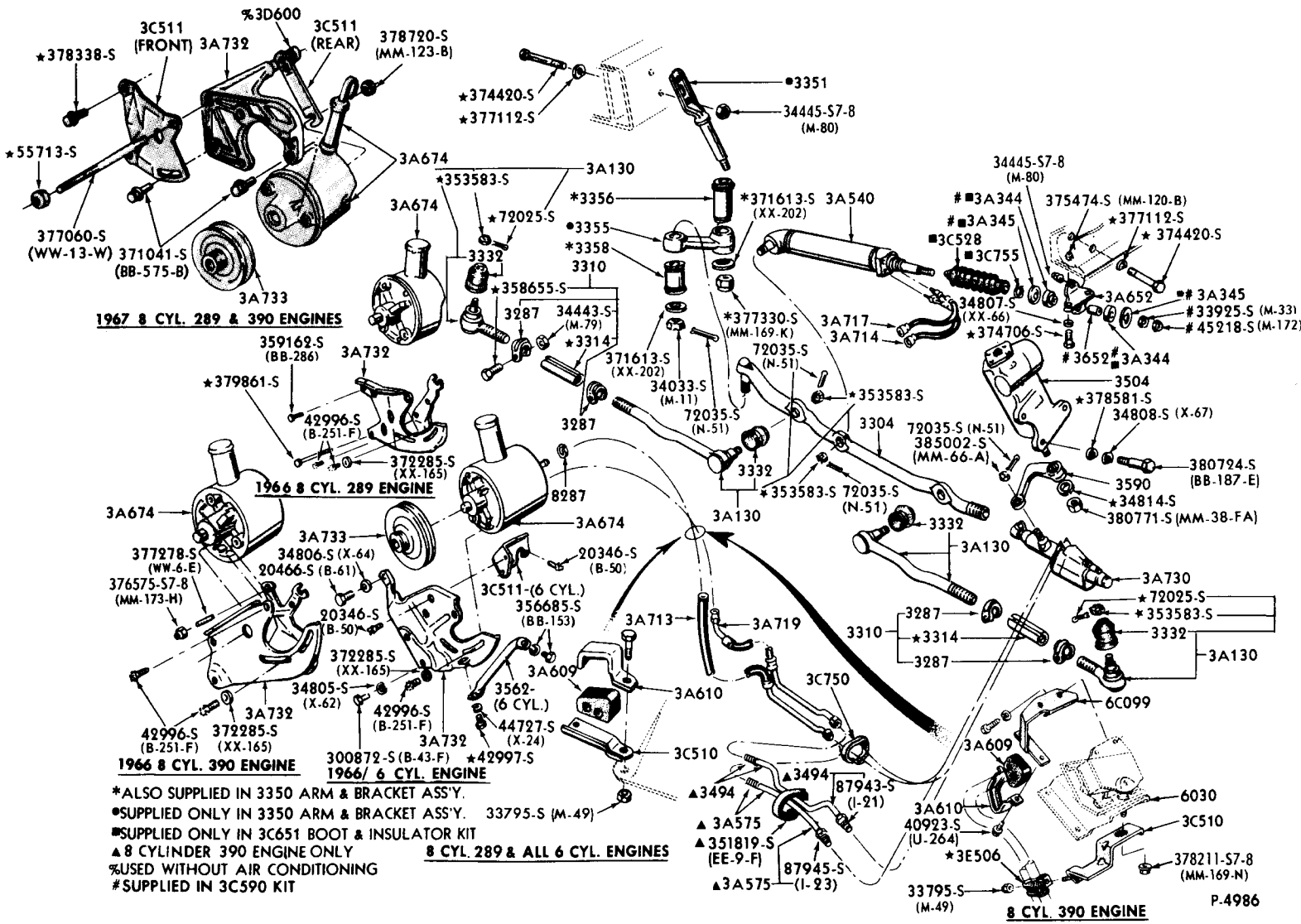



COPYRIGHT © 1975 — FORD MOTOR COMPANY — DEARBORN, MICHIGAN

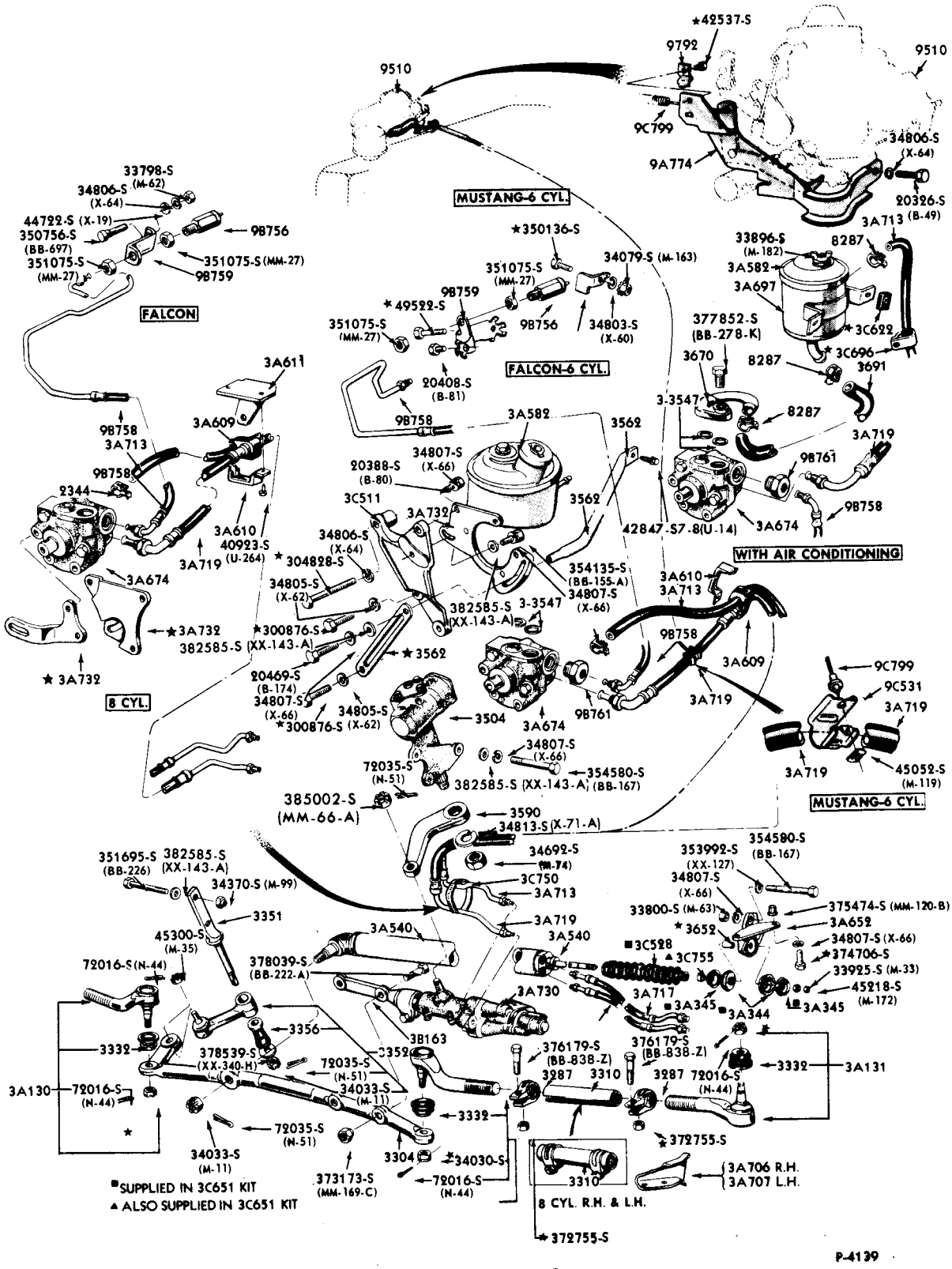


POWER STEERING SYSTEM - WITH EATON PUMP
1965 FALCON & MUSTANG

POWER STEERING SYSTEM WITH FORD PUMP - 6 CYLINDER
1965 FALCON, 1965/66 MUSTANG

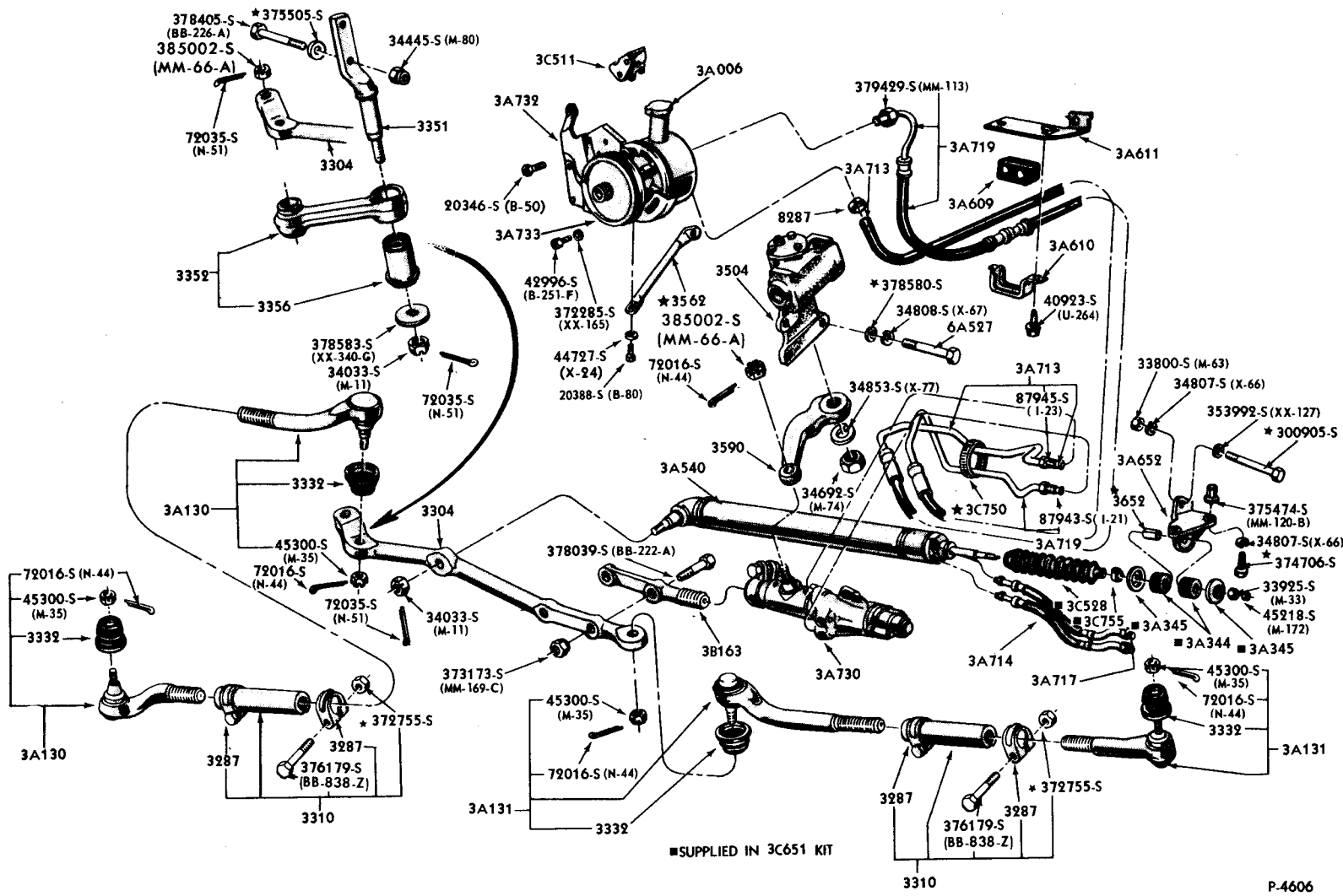



COPYRIGHT © 1975 — FORD MOTOR COMPANY — DEARBORN, MICHIGAN

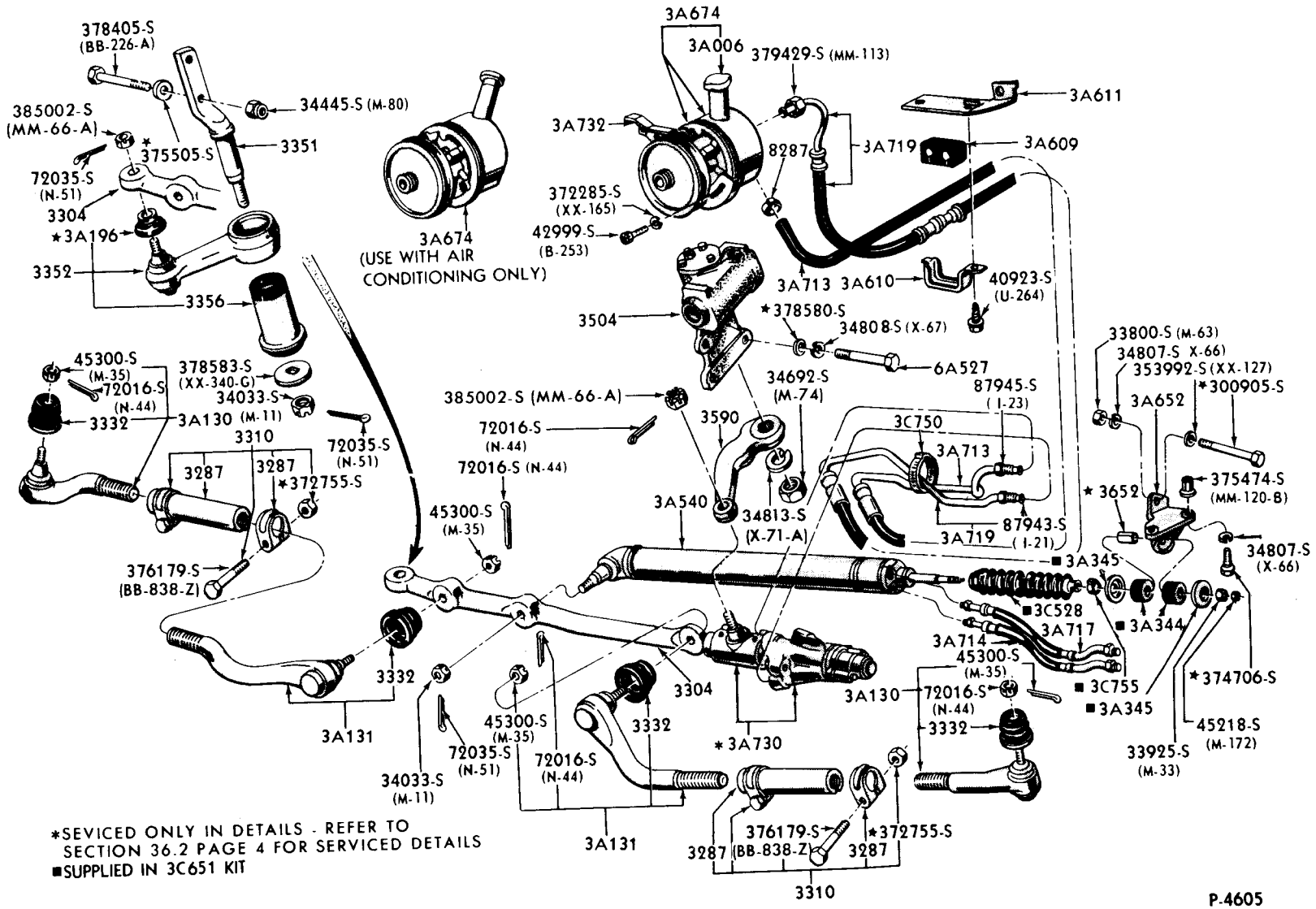


*SEVICED ONLY IN DETAILS - REFER TO SECTION 36.2 PAGE 4 FOR SERVICED DETAILS
■SUPPLIED IN 3C651 KIT

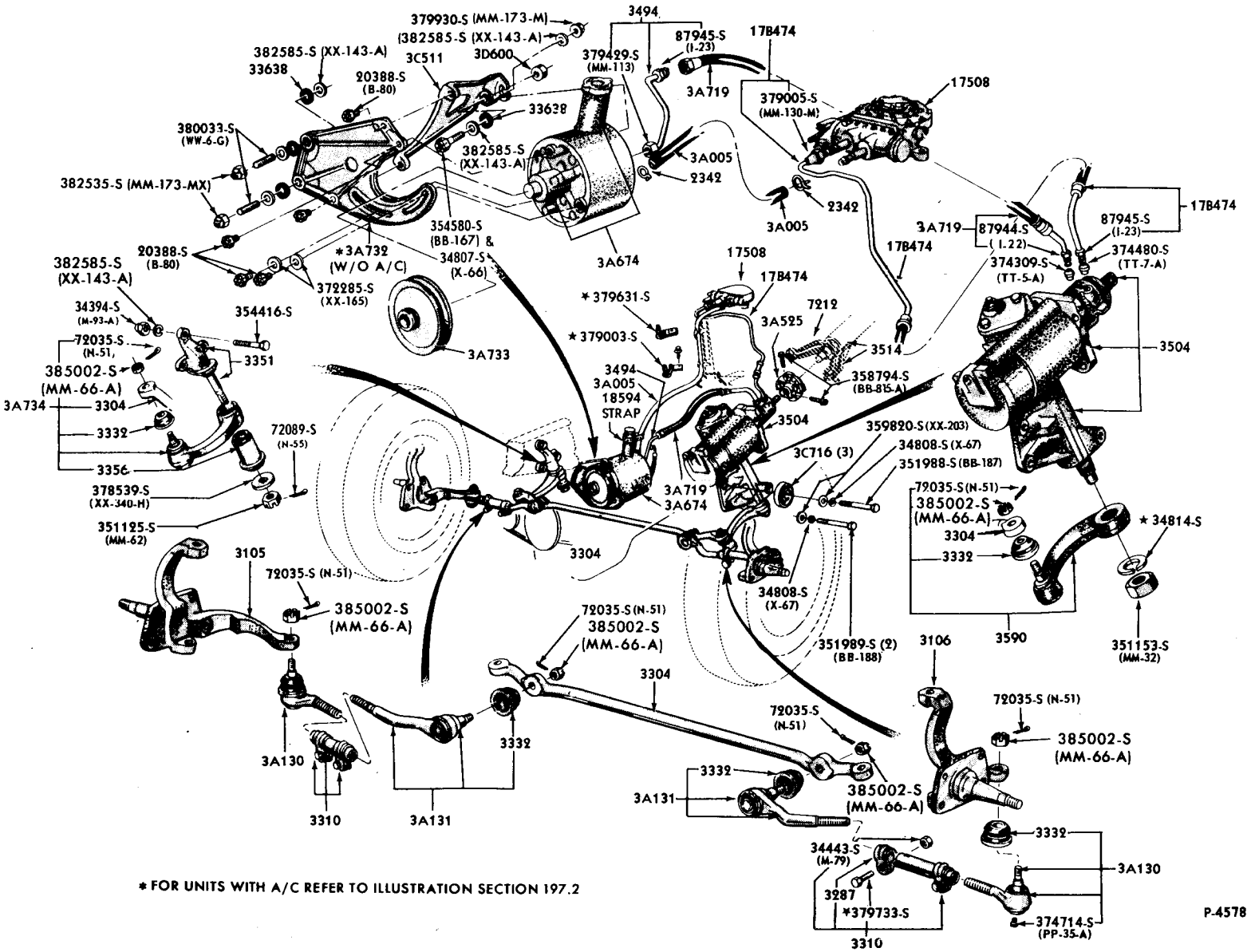


* FOR UNITS WITH A/C REFER TO ILLUSTRATION SECTION 197.2

P-4578


COPYRIGHT © 1975 — FORD MOTOR COMPANY — DEARBORN, MICHIGAN

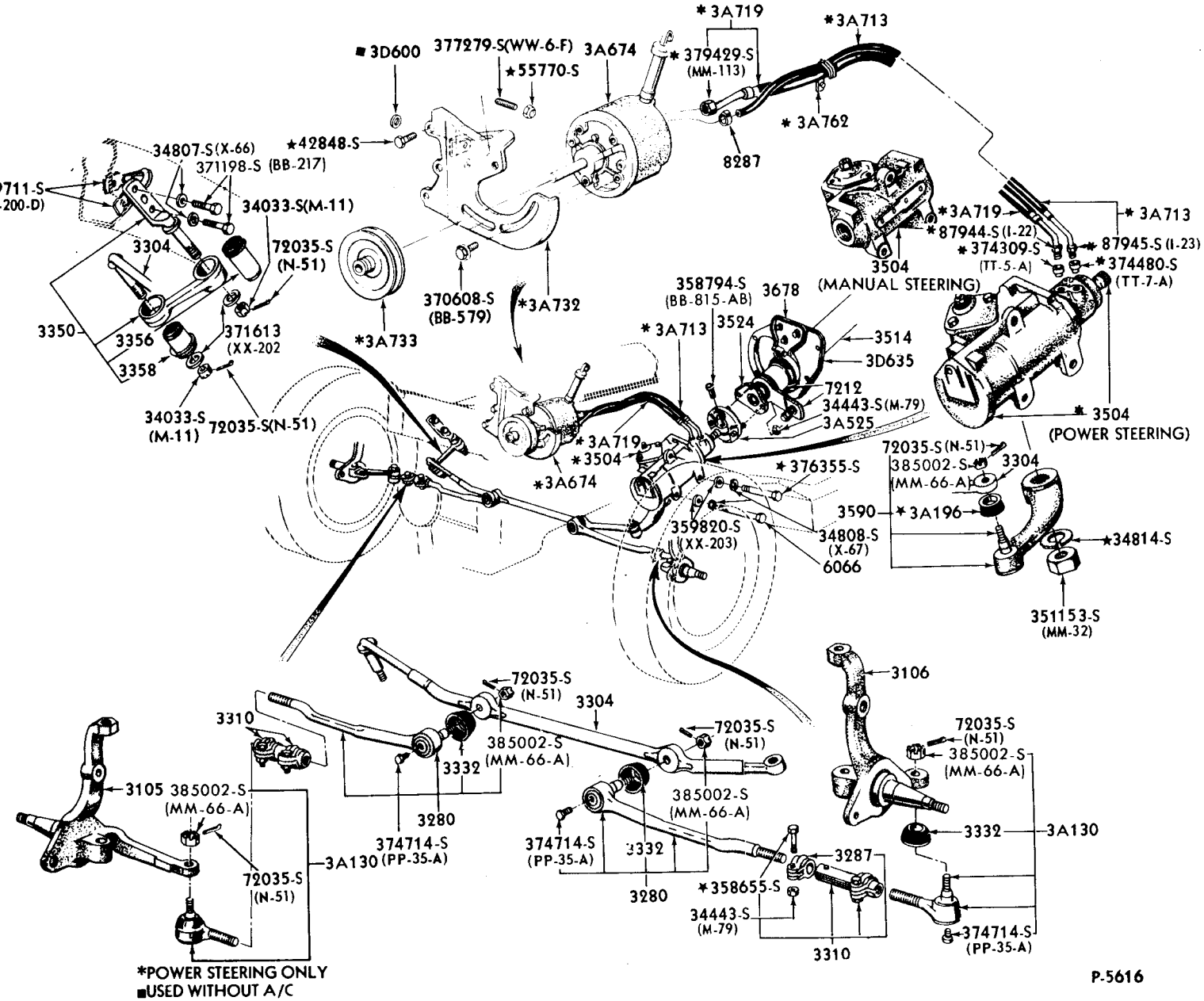


POWER STEERING SYSTEM
(TYPICAL FOR MANUAL STEERING LINKAGE)
1967/69 FORD - 6 CYL.

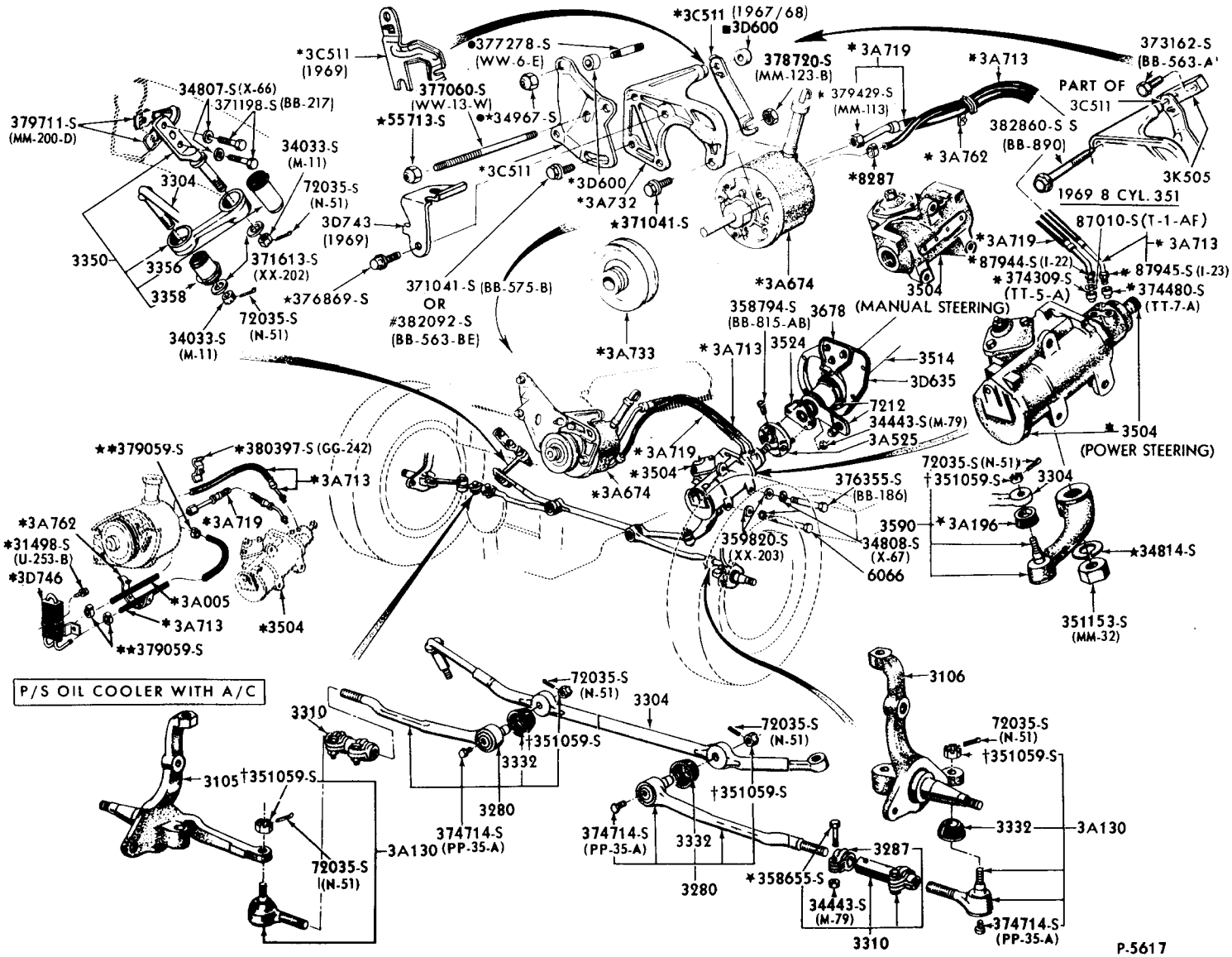


*POWER STEERING ONLY
■USED WITH A/C
●8 CYLINDER 429 WITHOUT A/C
#8 CYLINDER 429 ENGINE

† USE 385002-S (MM-66-A) FOR SERVICE

POWER STEERING SYSTEM (TYPICAL FOR MANUAL STEERING LINKAGE)
1967/69 FORD - 8 CYLINDER

COPYRIGHT © 1975 — FORD MOTOR COMPANY — DEARBORN, MICHIGAN

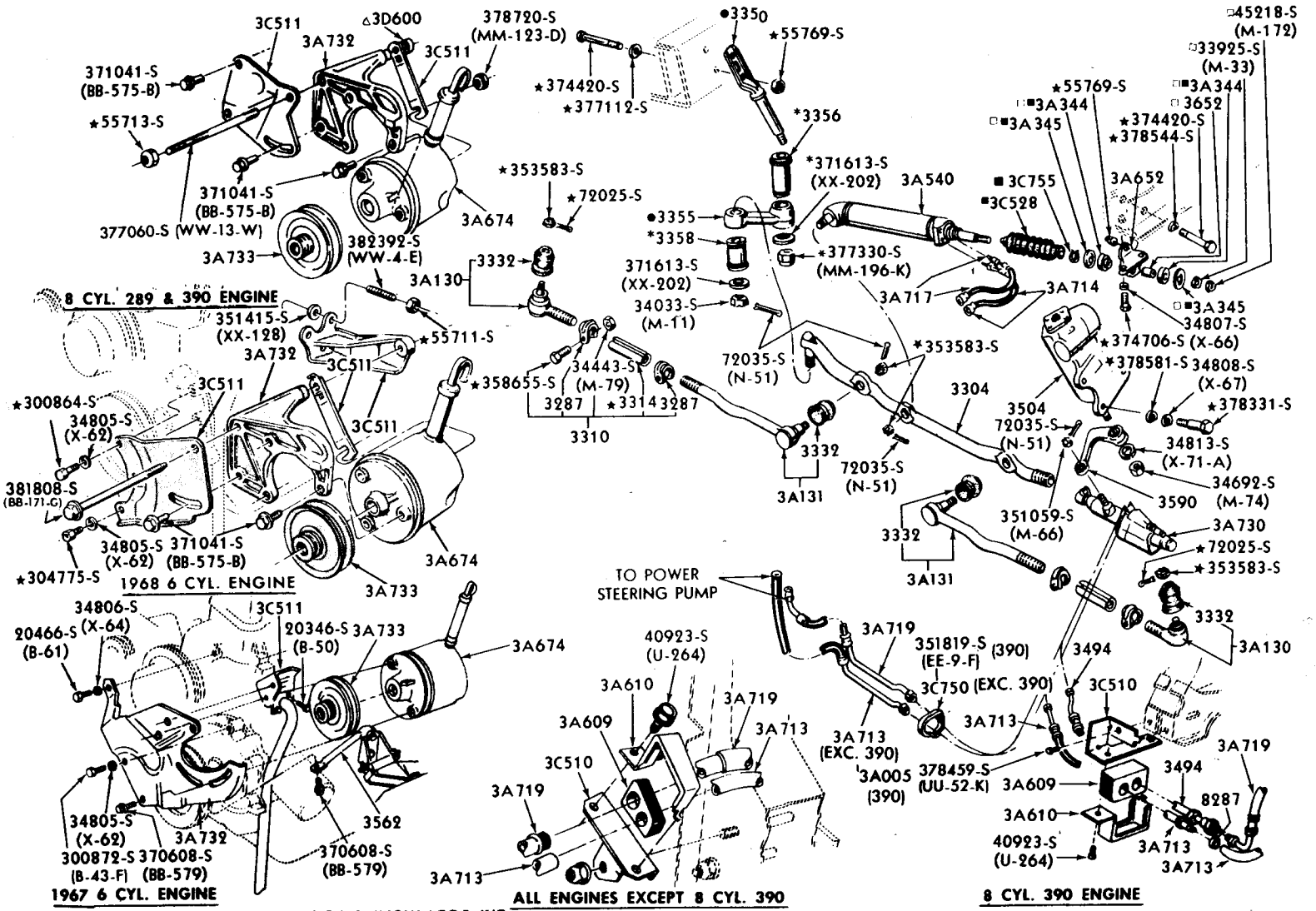


■SUPPLIED ONLY IN 3C651 BOOT & INSULATOR KIT
△USED WITHOUT AIR CONDITIONING
□SUPPLIED IN 3C590 KIT

●SUPPLIED ONLY IN 3350 ARM & BRACKET ASS'Y.
*ALSO SUPPLIED IN 3350 ARM & BRACKET ASS'Y.

P-5714

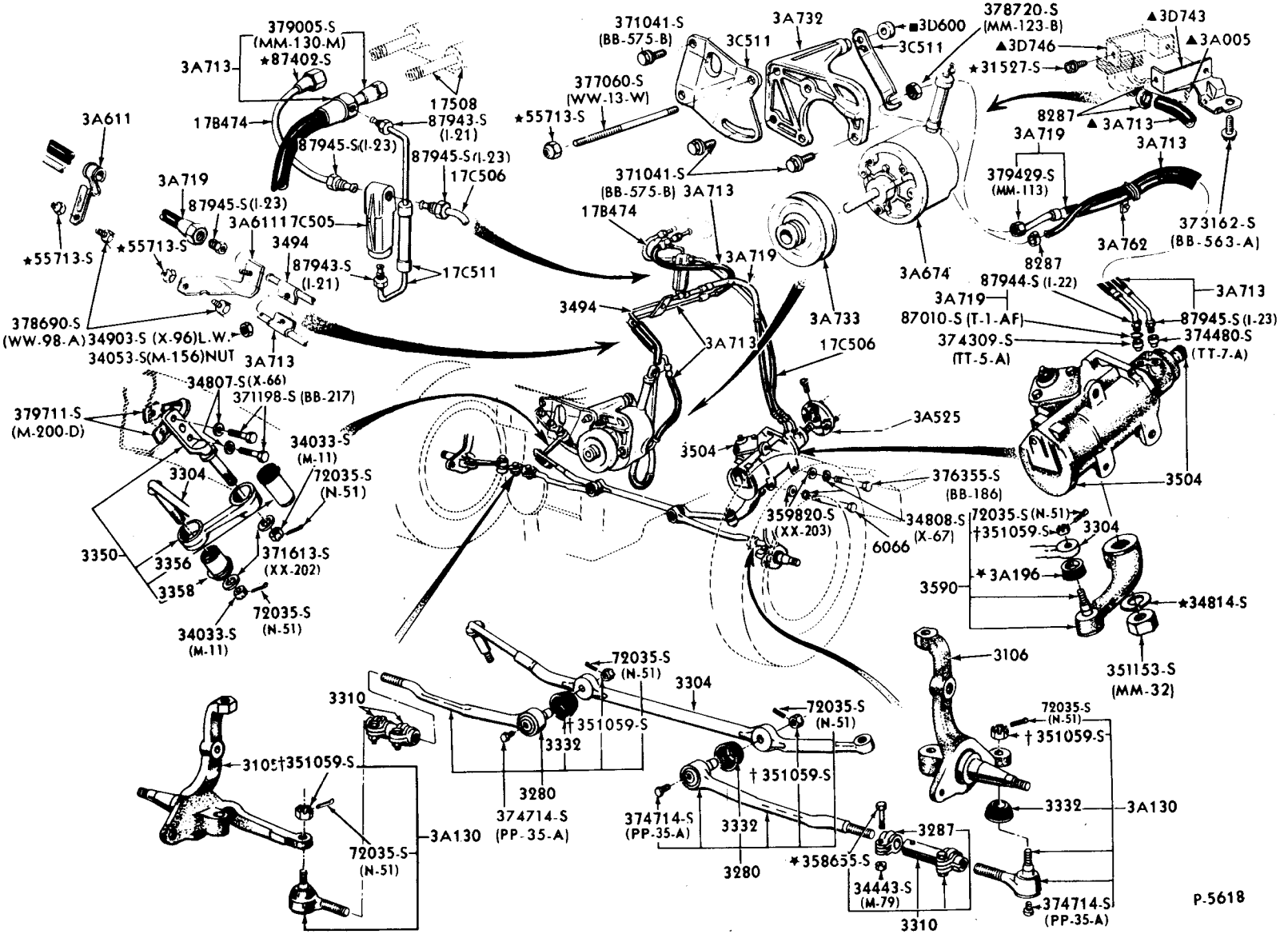


† USE 385002-S (MM-66-A) FOR SERVICE
▲ USED WITH A/C
■USED WITHOUT A/C


COPYRIGHT © 1975 — FORD MOTOR COMPANY — DEARBORN, MICHIGAN

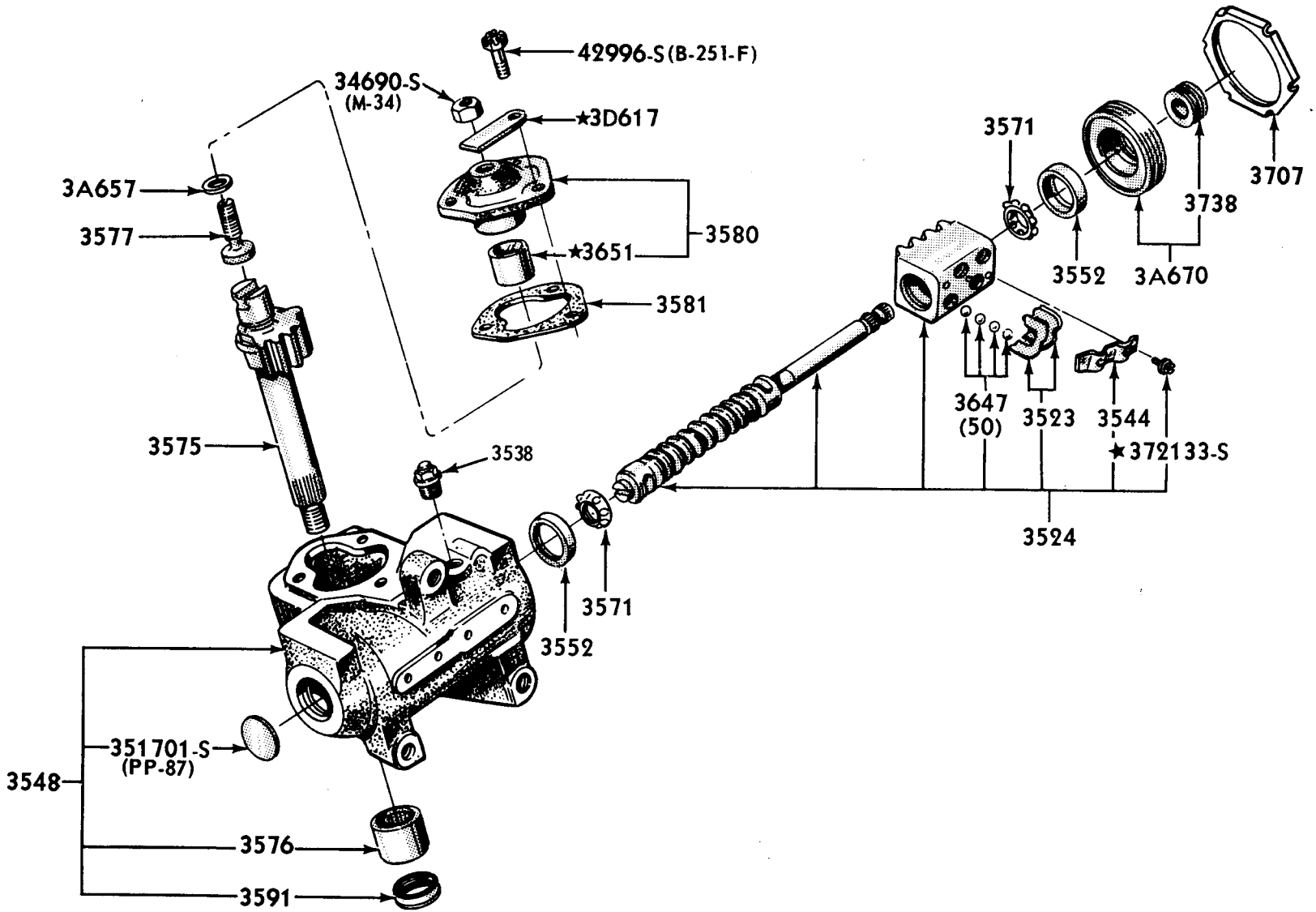


P-4607




COPYRIGHT © 1975 — FORD MOTOR COMPANY — DEARBORN, MICHIGAN

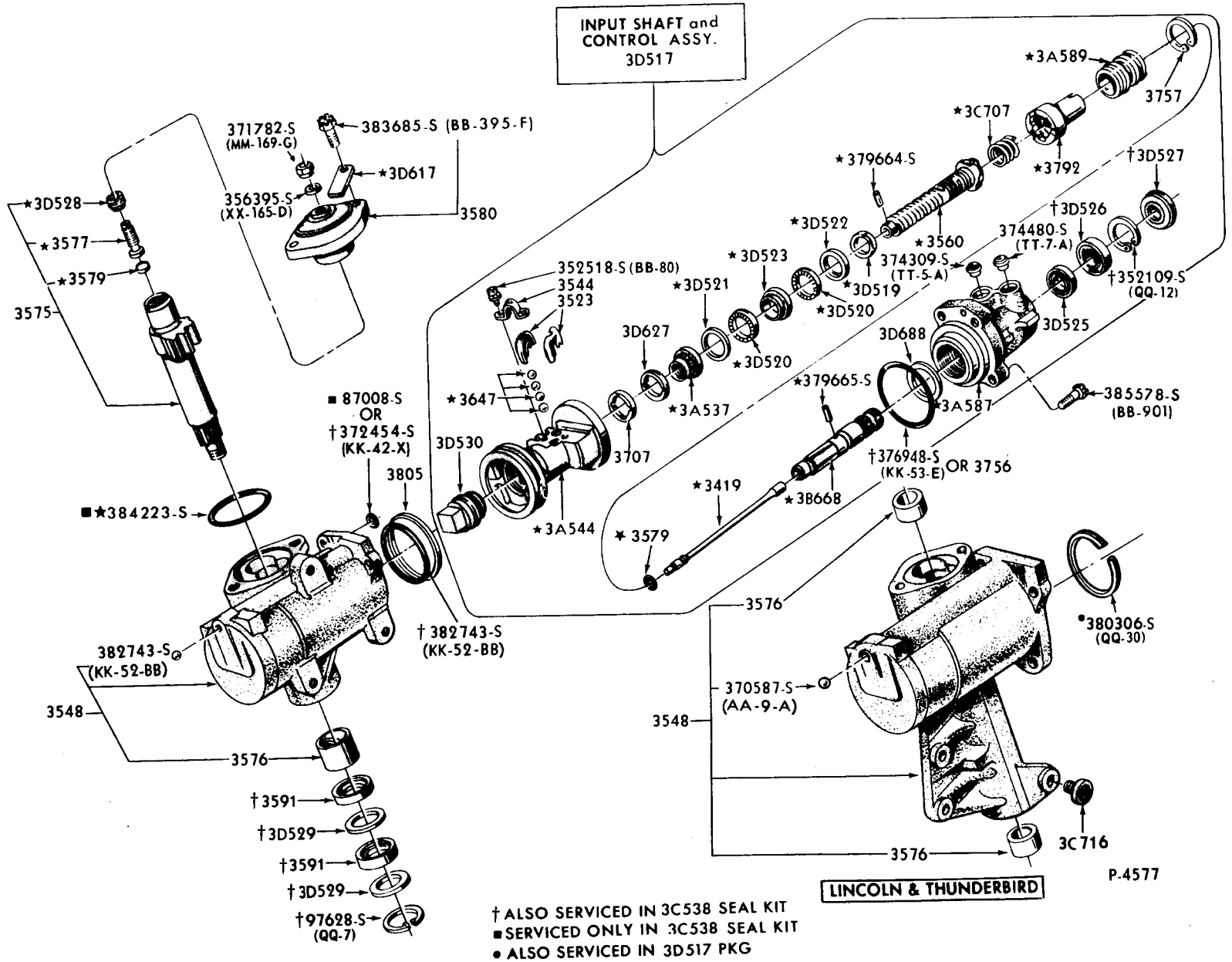
INPUT SHAFT and CONTROL ASSY. 3D517
371782-S (MM-169-G)
383685-S (BB-395-F)
★3D617
356395-S (XX-165-D)
3580
★3D528
★3577
★3579
3575
■ 87008-S OR †372454-S (KK-42-X)
3805
■★384223-S
382743-S (KK-52-BB)
3548
3576
†3591
†3D529
†3591
†3D529
†97628-S (QQ-7)
†382743-S (KK-52-BB)
352518-S (BB-80)
3544
3523
★3647
3D530
★3A544
3707
3D627
★3A537
★3D521
★3D523
★3D520
★3D520
★3D522
★3D519
★379664-S
★3C707
★3A589
3757
★3792
†3D527
★3560
374309-S (TT-5-A)
374480-S (TT-7-A)
†3D526
†352109-S (QQ-12)
3D525
3D688
★379665-S
★3A587
385578-S (BB-901)
†376948-S (KK-53-E) OR 3756
★3419
★3B668
★3579
3576
•380306-S (QQ-30)
370587-S (AA-9-A)
3548
3576
3C716
P-4577
LINCOLN & THUNDERBIRD
† ALSO SERVICED IN 3C538 SEAL KIT
■ SERVICED ONLY IN 3C538 SEAL KIT
• ALSO SERVICED IN 3D517 PKG

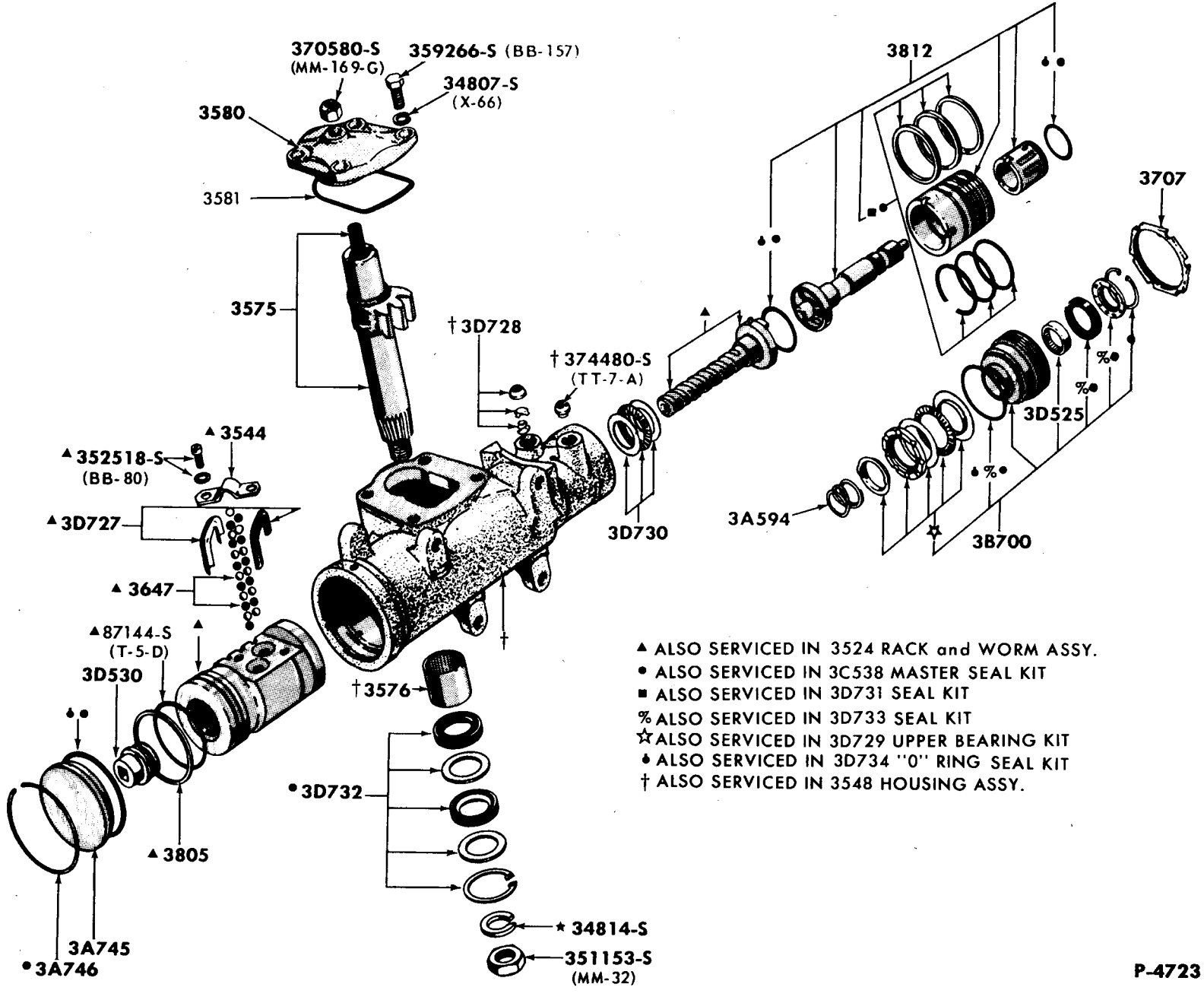


▲ ALSO SERVICED IN 3524 RACK and WORM ASSY.
• ALSO SERVICED IN 3C538 MASTER SEAL KIT
■ ALSO SERVICED IN 3D731 SEAL KIT
% ALSO SERVICED IN 3D733 SEAL KIT
☆ ALSO SERVICED IN 3D729 UPPER BEARING KIT
♦ ALSO SERVICED IN 3D734 "O" RING SEAL KIT
† ALSO SERVICED IN 3548 HOUSING ASSY.

POWER STEERING GEAR DETAILS - SAGINAW DESIGN
1972 BRONCO, 1965/69 FORD, 1971/72 MUSTANG


COPYRIGHT © 1975 — FORD MOTOR COMPANY — DEARBORN, MICHIGAN

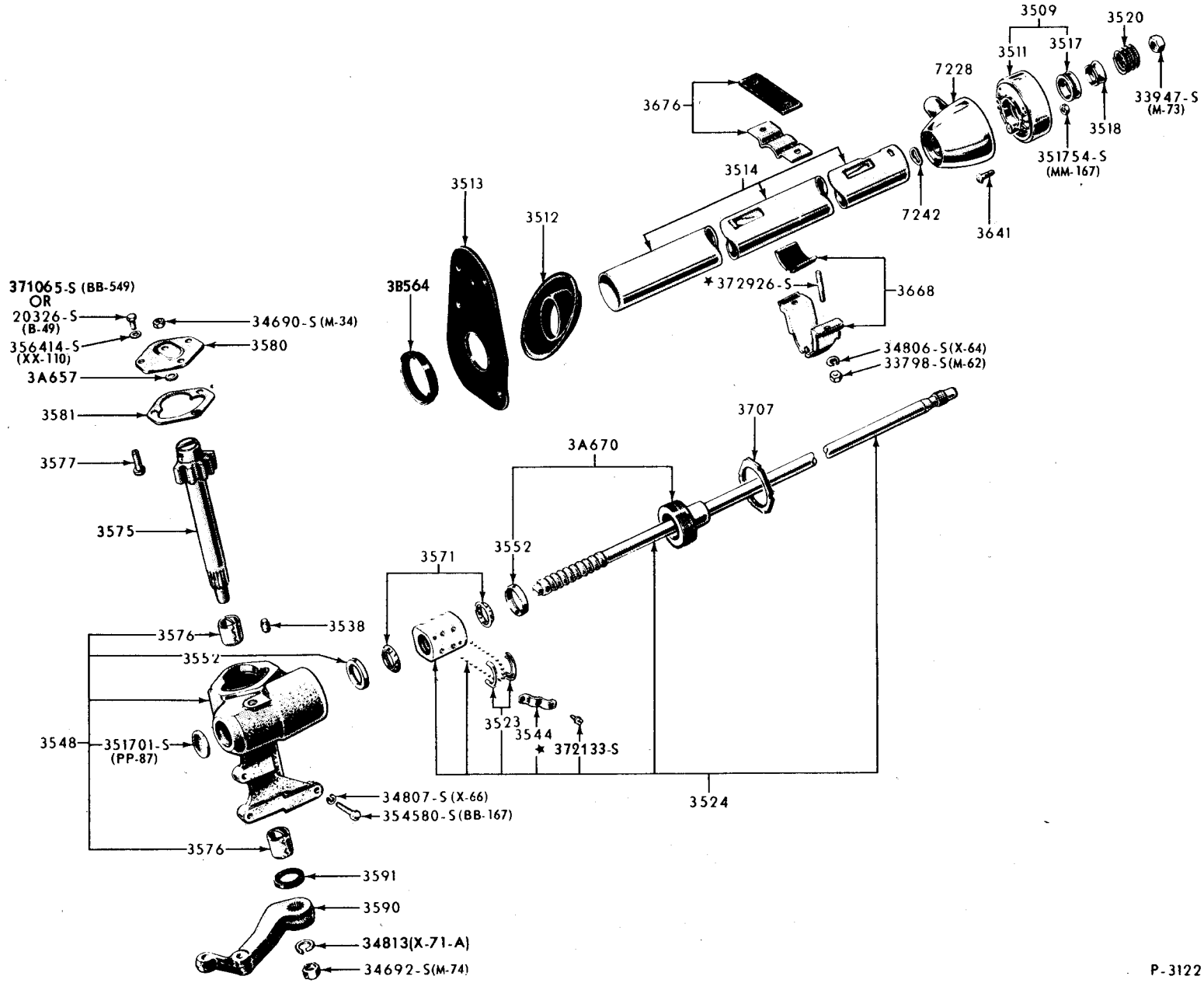
3509
3520
3511
3517
7228
33947-S
(M-73)
3676
3518
351754-S
(MM-167)
3514
3513
7242
3512
3641
371065-S (BB-549)
OR
20326-S
(B-49)
3B564
*372926-S
3668
34690-S (M-34)
356414-S
(XX-110)
3580
34806-S(X-64)
3A657
33798-S(M-62)
3581
3707
3577
3A670
3575
3552
3571
3576
3538
3552
3523
3544
3548
351701-S
(PP-87)
*372133-S
34807-S (X-66)
354580-S(BB-167)
3524
3576
3591
3590
34813(X-71-A)
34692-S(M-74)

P-3122

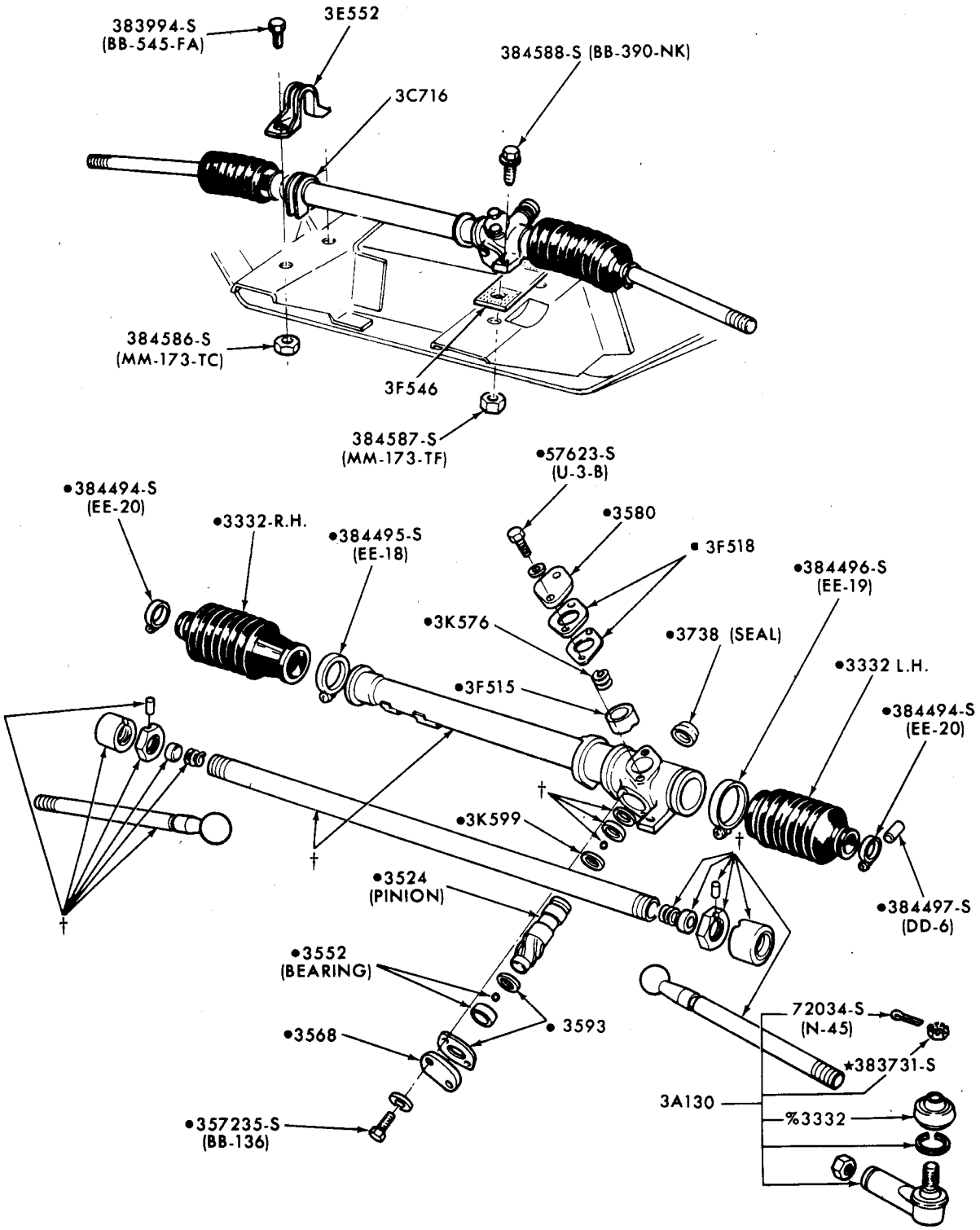


† SERVICED ONLY IN 3504 STEERING GEAR ASSY.
•ALSO SERVICED IN 3504 STEERING GEAR ASSY.
% 1973 ONLY

P-7966

STEERING GEAR and LINKAGE
1971/72 PINTO


COPYRIGHT © 1975 — FORD MOTOR COMPANY — DEARBORN, MICHIGAN

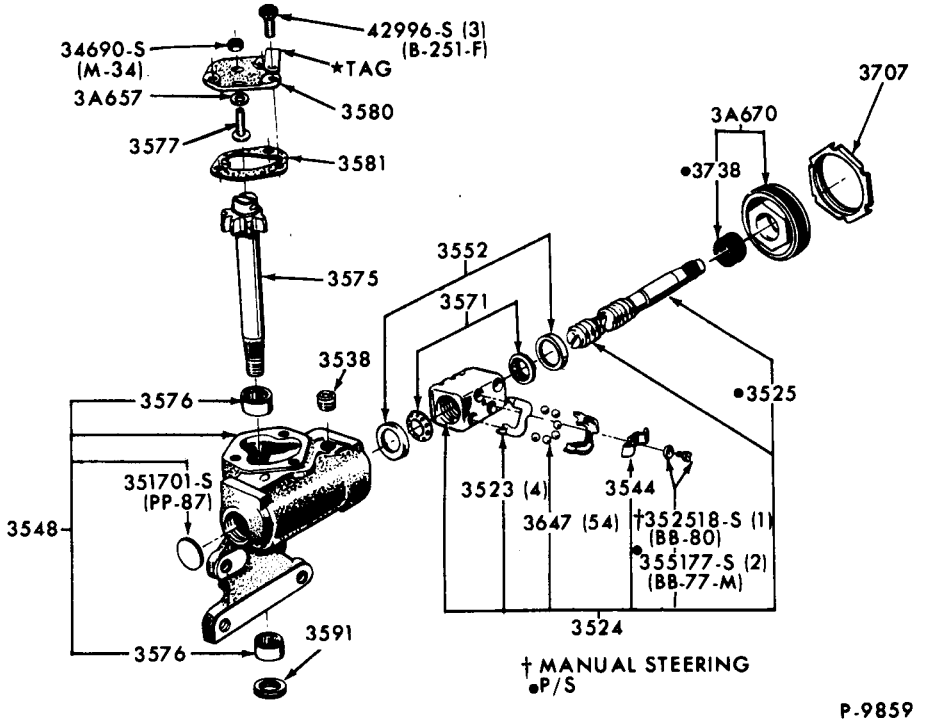


STEERING GEAR DETAILS
1966/71 FAIRLANE/TORINO, 1966/70 FALCON, 1970/72 MAVERICK & 1966/72 MUSTANG

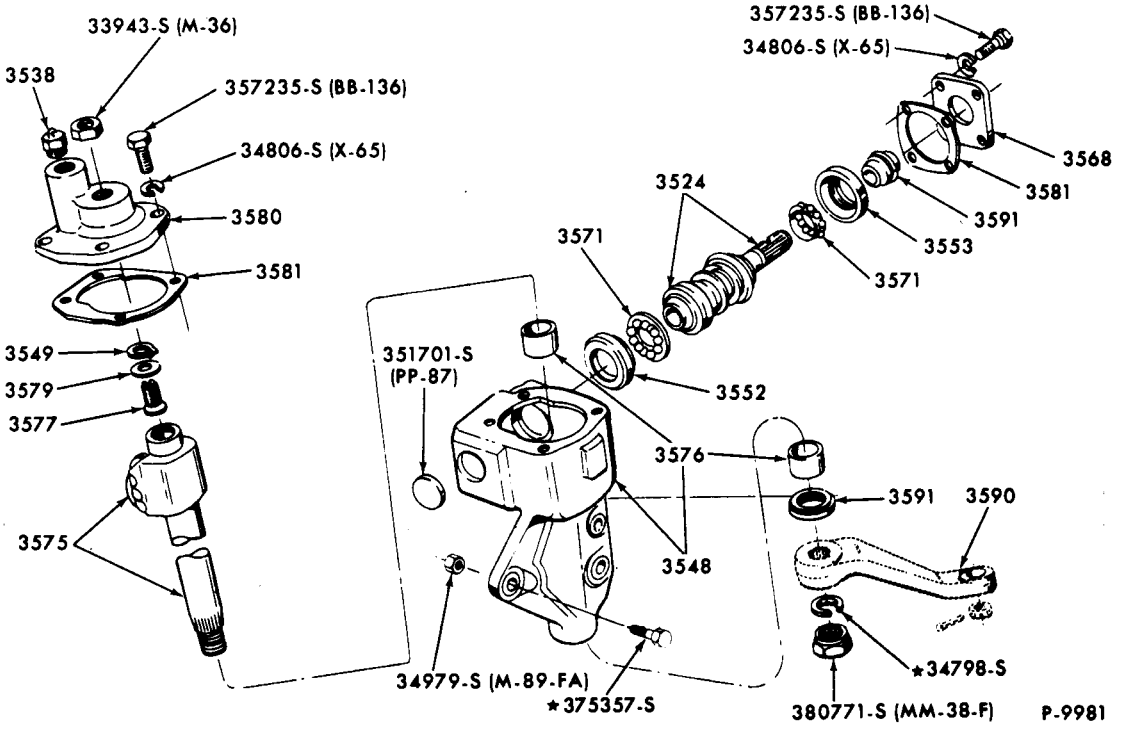


STEERING GEAR DETAILS
1966/72 BRONCO

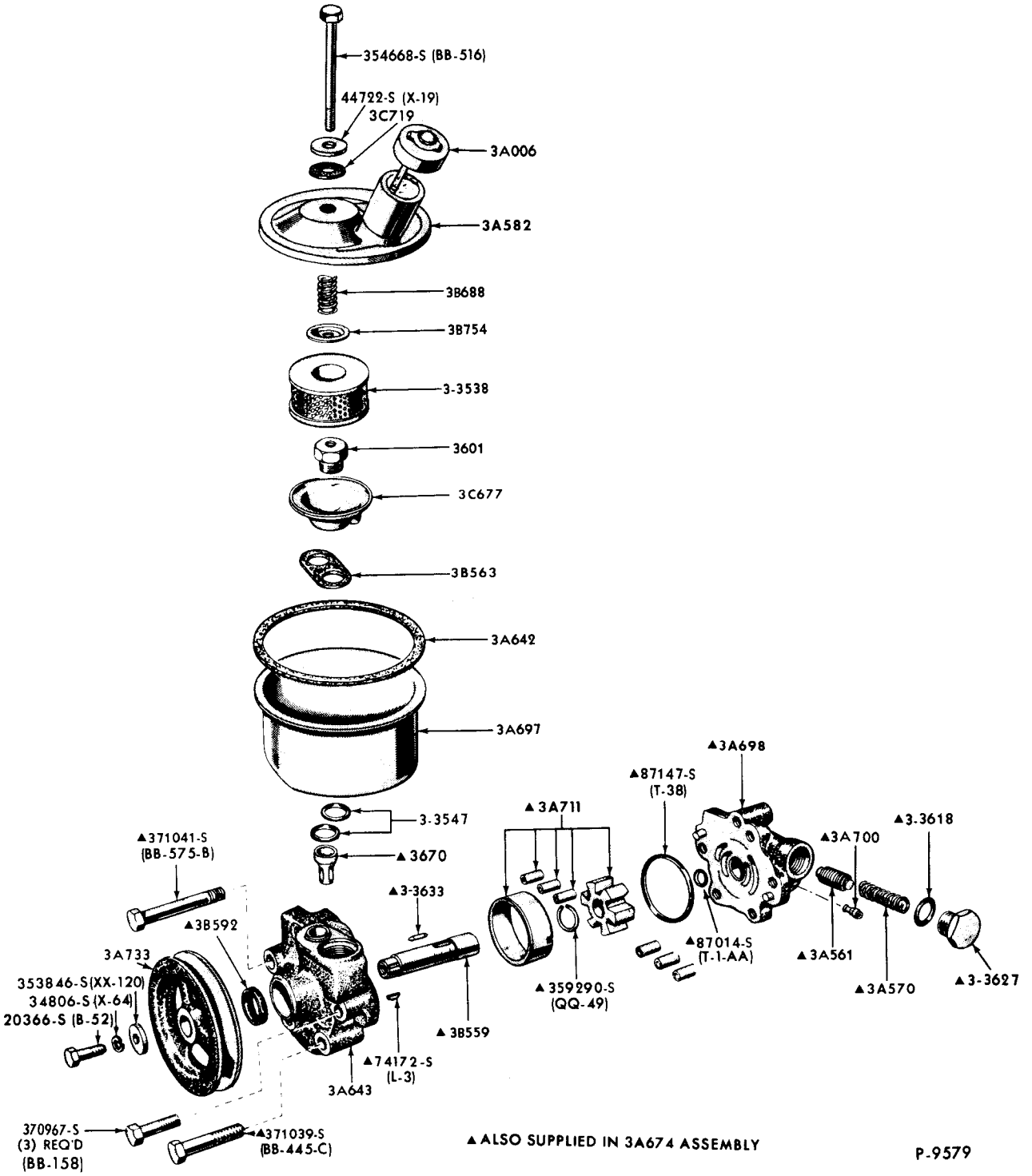


POWER STEERING PUMP & RELATED PARTS - (EATON TYPE)
1965 FORD, FAIRLANE, FALCON, MUSTANG & THUNDERBIRD


COPYRIGHT © 1975 — FORD MOTOR COMPANY — DEARBORN, MICHIGAN

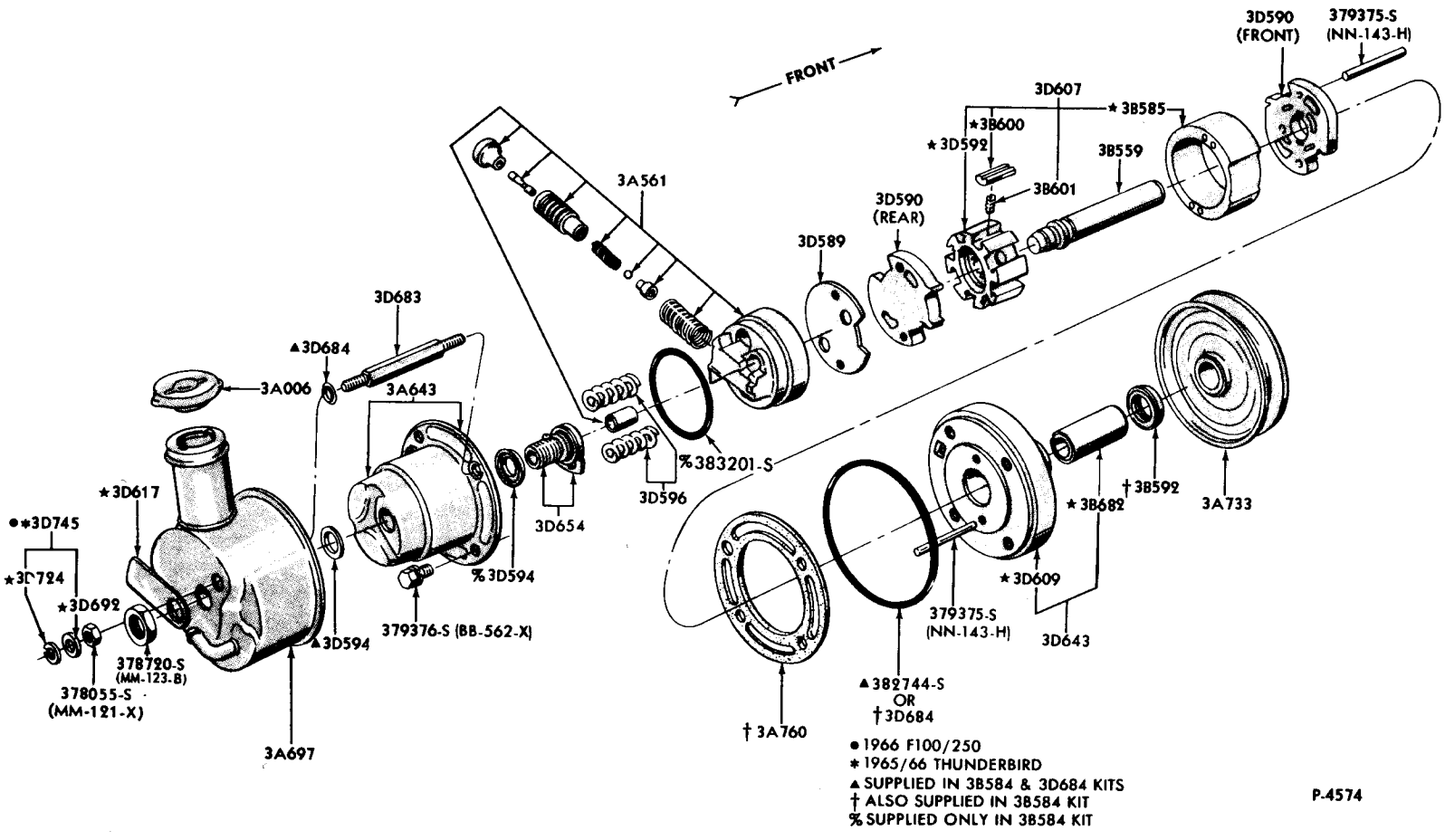


POWER STEERING PUMP DETAILS (FORD SLIPPER TYPE)
1965/66 FORD, FAIRLANE, FALCON & THUNDERBIRD, 1965/66 MUSTANG

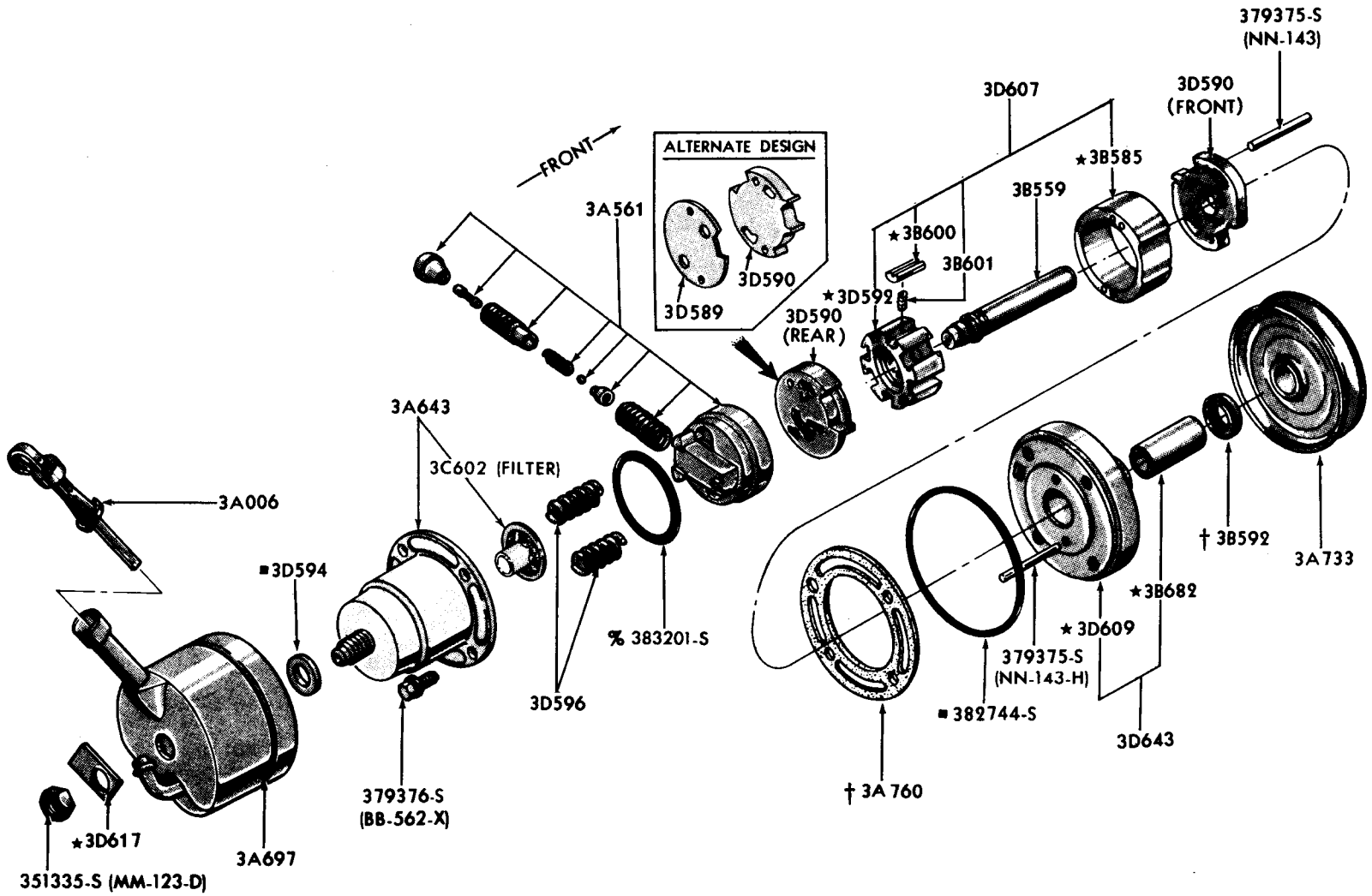


% SERVICED ONLY IN 3B584 KIT
■ SERVICED IN 3B584 and 3D684 KITS
† ALSO SERVICED IN 3B584 KIT

P-5615

POWER STEERING PUMP DETAILS (FORD SLIPPER TYPE)
1972 BRONCO, 1967/72 FAIRLANE/TORINO, FALCON, FORD, MUSTANG, 1970/72 MAVERICK, 1967/71 THUNDERBIRD


COPYRIGHT © 1975 — FORD MOTOR COMPANY — DEARBORN, MICHIGAN

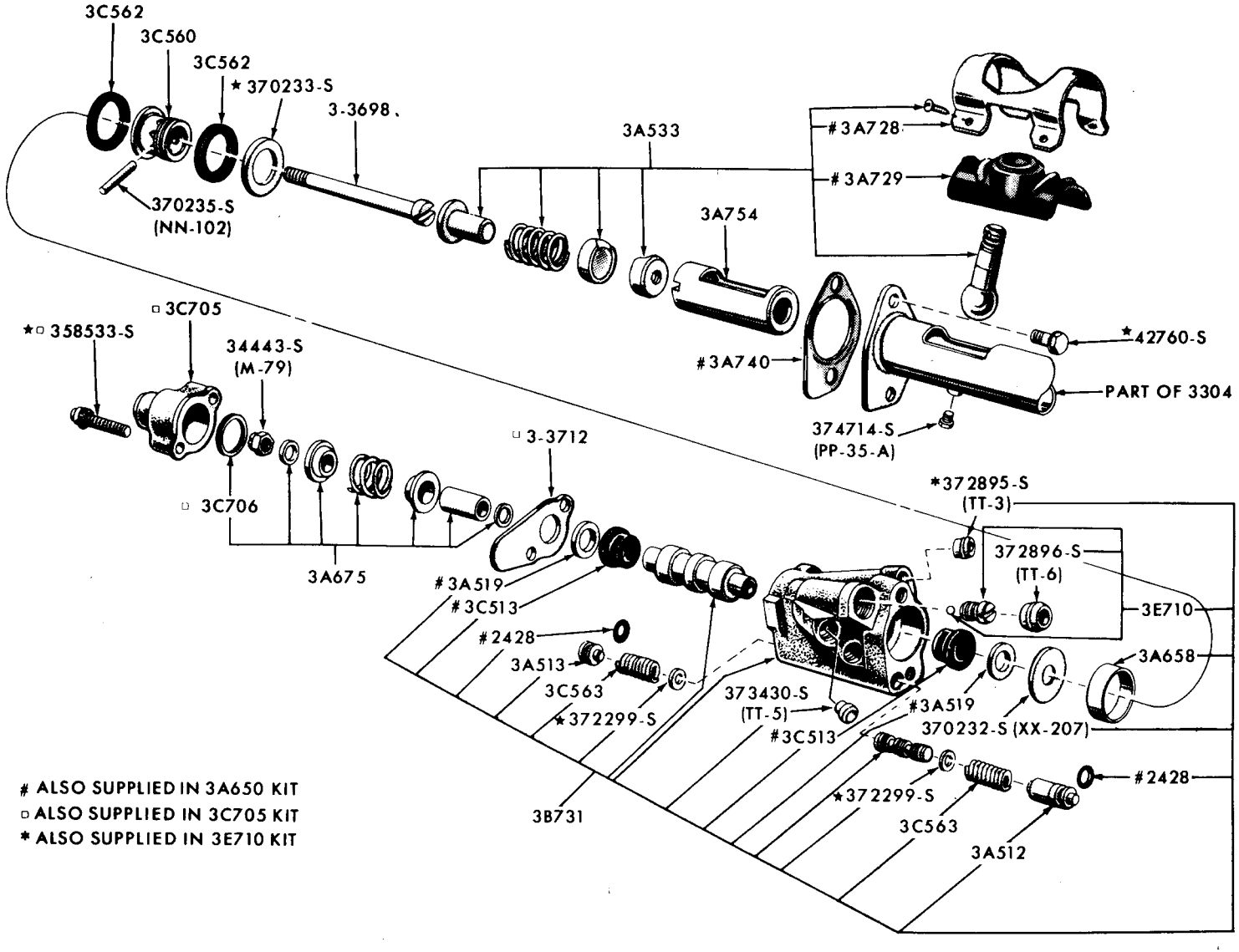
3C562
3C560
3C562
★ 370233-S
3-3698
370235-S
(NN-102)
3A533
# 3A728
# 3A729
3A754
# 3A740
★ 42760-S
PART OF 3304
374714-S
(PP-35-A)
★□ 358533-S
□ 3C705
34443-S
(M-79)
□ 3C706
3A675
□ 3-3712
# 3A519
# 3C513
# 2428
3A513
3C563
★ 372299-S
3B731
★372895-S
(TT-3)
372896-S
(TT-6)
3E710
3A658
373430-S
(TT-5)
# 3A519
# 3C513
370232-S (XX-207)
★ 372299-S
3C563
3A512
# 2428
# ALSO SUPPLIED IN 3A650 KIT
□ ALSO SUPPLIED IN 3C705 KIT
* ALSO SUPPLIED IN 3E710 KIT

P-7453

POWER STEERING CONTROL VALVE DETAILS - TYPICAL
1965/71 FAIRLANE/TORINO, 1965/70 FALCON - 6 CYL., 1966/70 FALCON - 8 CYL.
1970/72 MAVERICK, 1965/66 MUSTANG - 6 CYL., 1967/70 MUSTANG

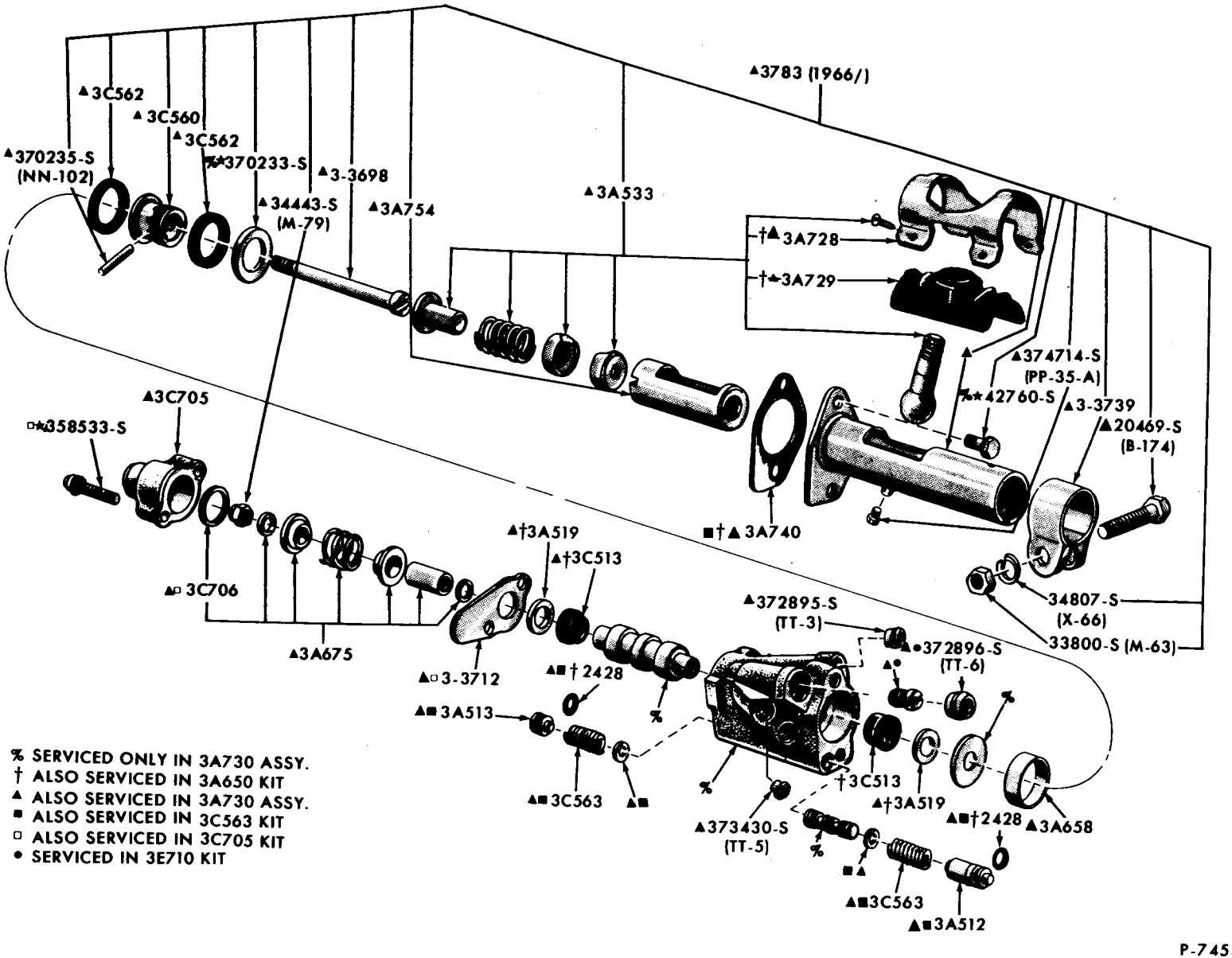


% SERVICED ONLY IN 3A730 ASSY.
† ALSO SERVICED IN 3A650 KIT
▲ ALSO SERVICED IN 3A730 ASSY.
■ ALSO SERVICED IN 3C563 KIT
□ ALSO SERVICED IN 3C705 KIT
● SERVICED IN 3E710 KIT


COPYRIGHT © 1975 — FORD MOTOR COMPANY — DEARBORN, MICHIGAN

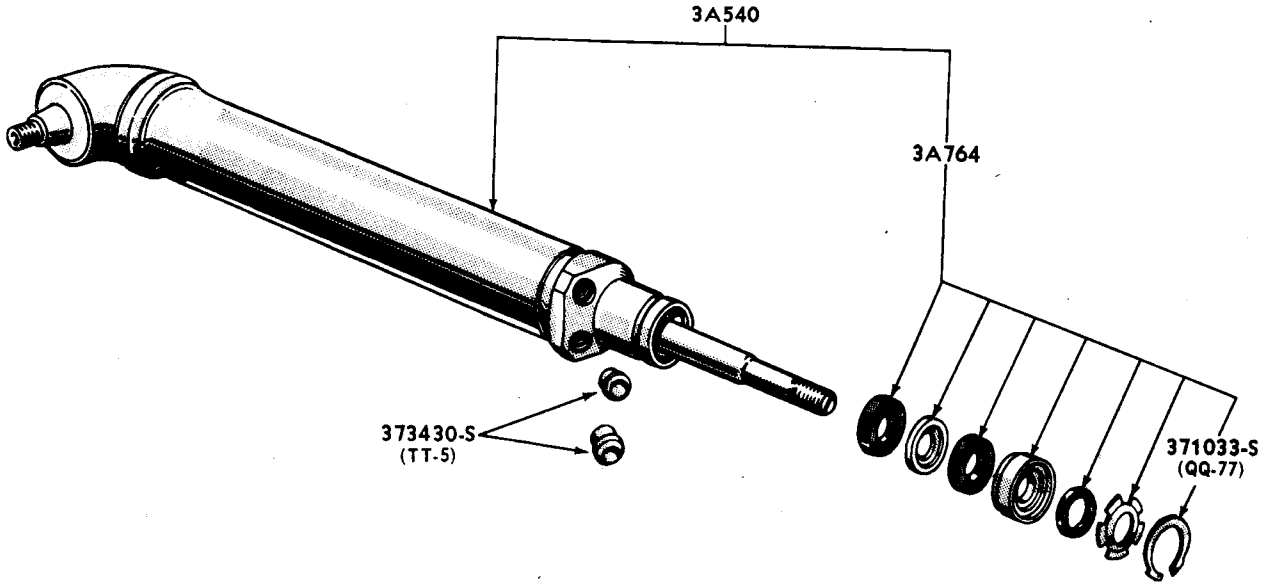


P-4180

POWER STEERING CYLINDER DETAILS - TYPICAL
1965/71 FAIRLANE/TORINO, 1965/70 FALCON & MUSTANG, 1970/72 MAVERICK

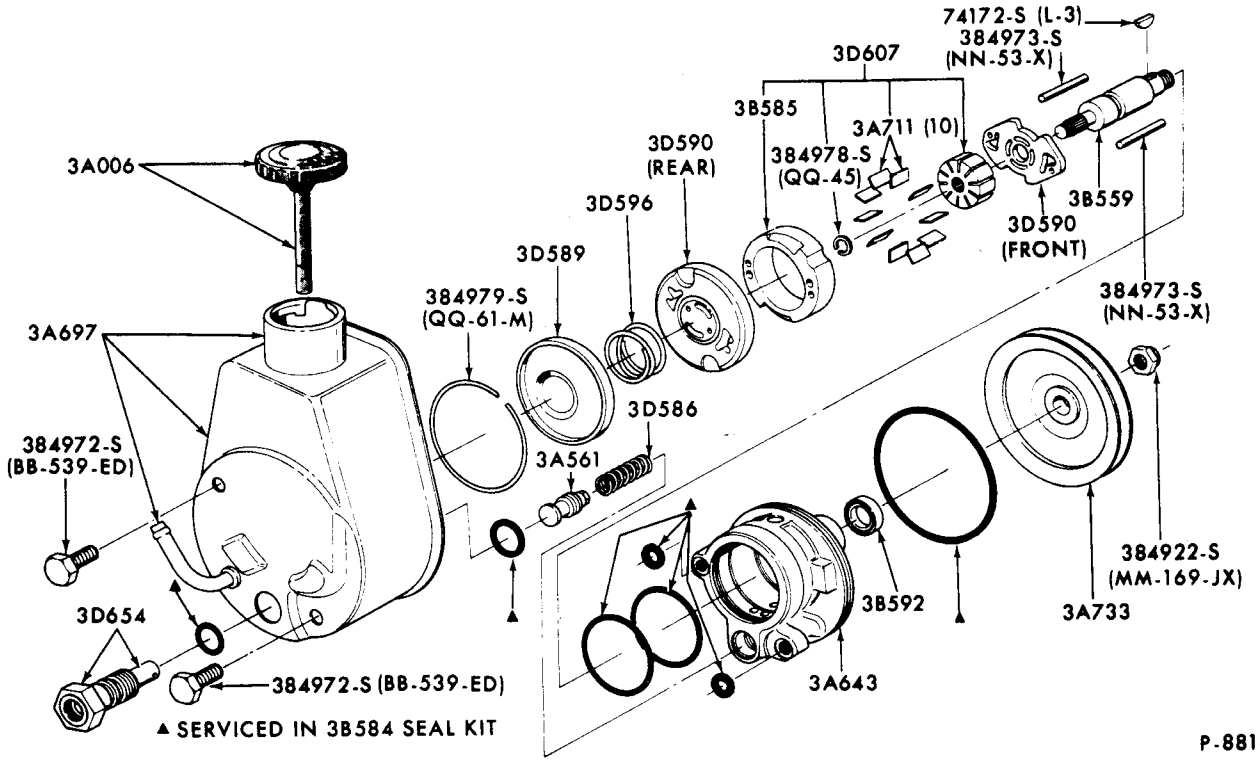


P-8816

POWER STEERING PUMP - SAGINAW DESIGN
1972 THUNDERBIRD - 8 CYLINDER 429,460 WITH A/C ONLY

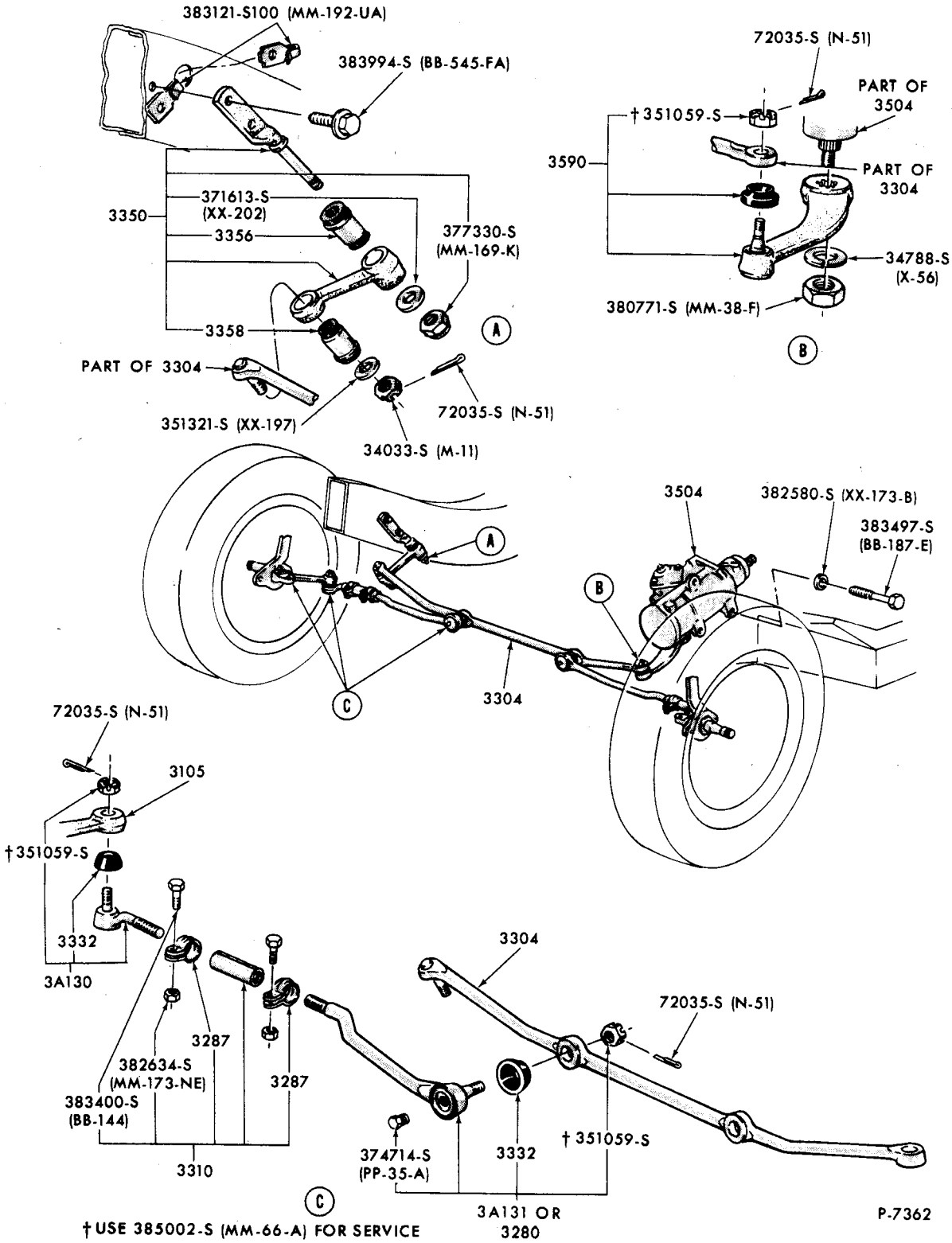


†USE 385002-S (MM-66-A) FOR SERVICE

STEERING LINKAGE (POWER and MANUAL) - TYPICAL
1970/72 FORD, 1970/71 THUNDERBIRD


COPYRIGHT © 1975 — FORD MOTOR COMPANY — DEARBORN, MICHIGAN

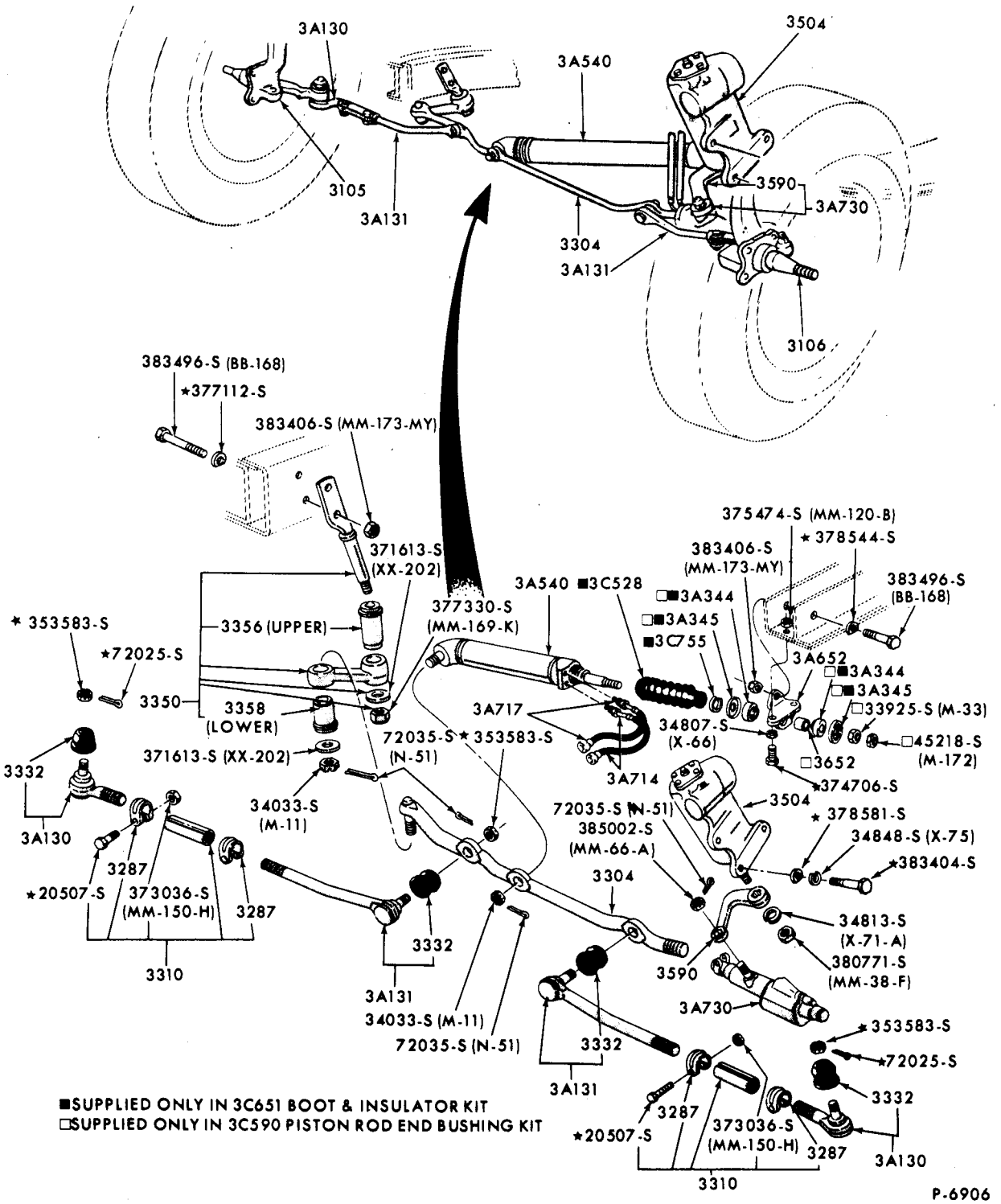


POWER STEERING LINKAGE
1969/71 FAIRLANE/TORINO, 1969/70 FALCON & MUSTANG

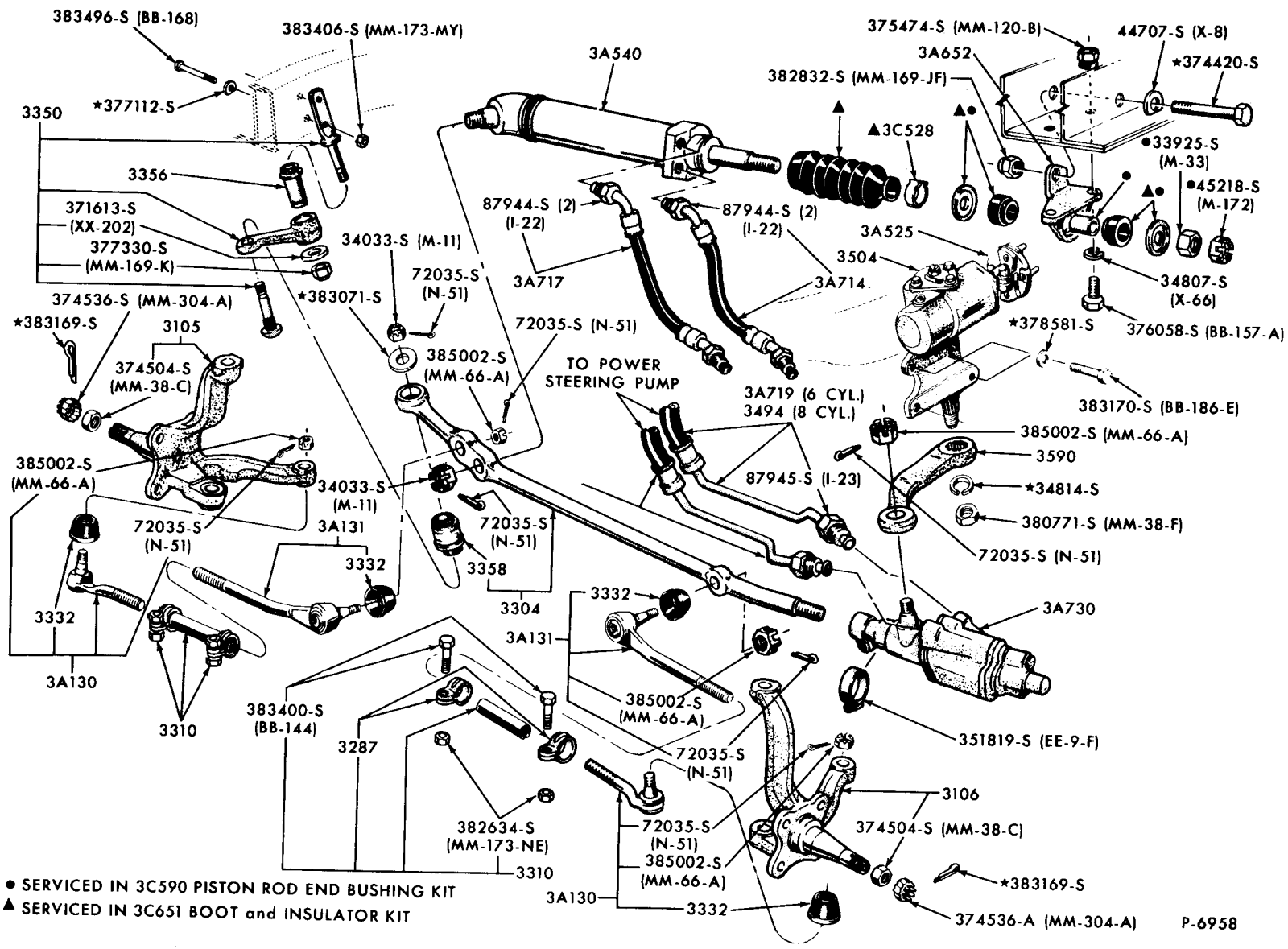


● SERVICED IN 3C590 PISTON ROD END BUSHING KIT
▲ SERVICED IN 3C651 BOOT and INSULATOR KIT



COPYRIGHT © 1975 — FORD MOTOR COMPANY — DEARBORN, MICHIGAN

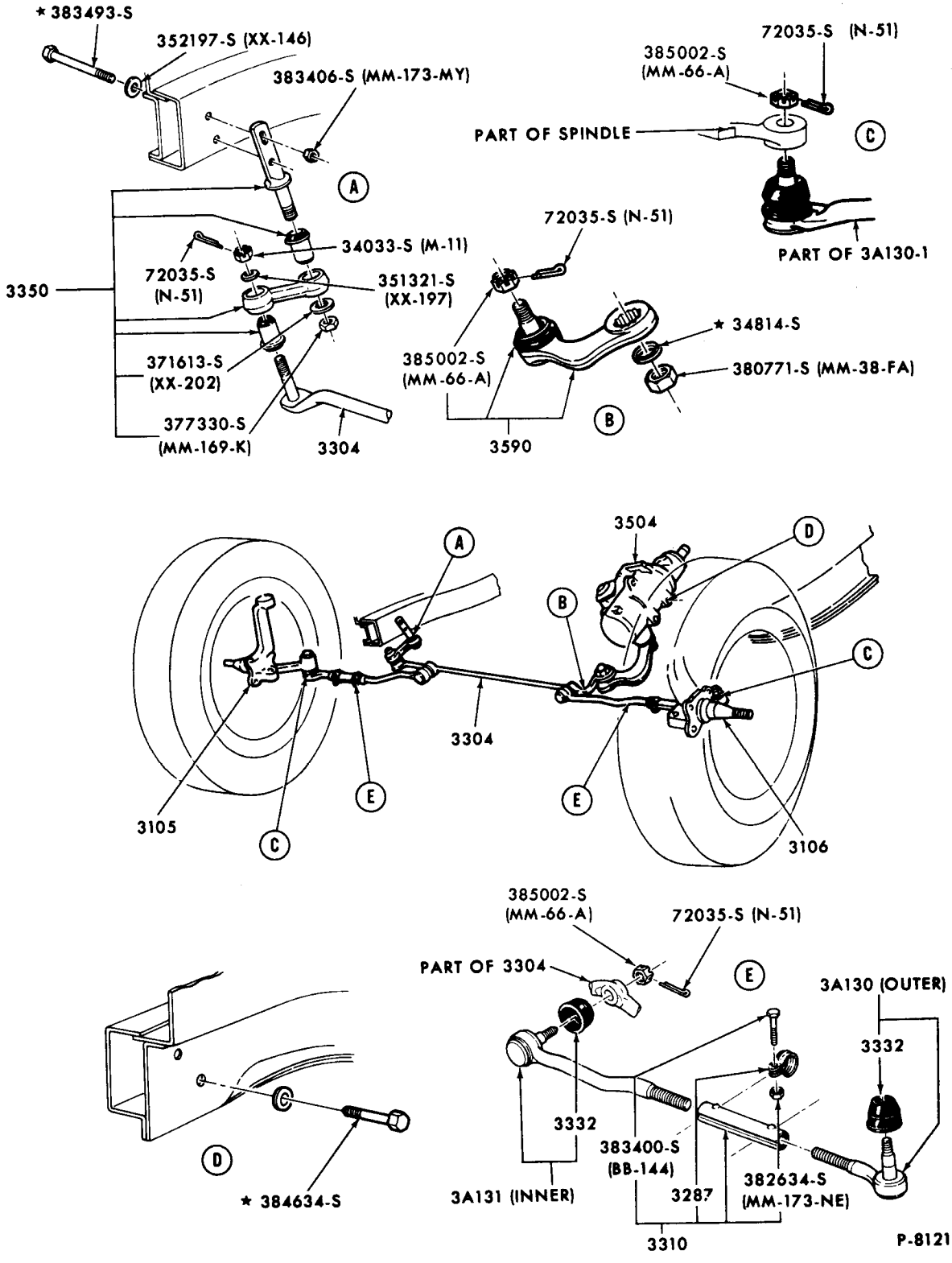


STEERING LINKAGE (POWER & MANUAL) - TYPICAL
1971/72 MUSTANG, 1972 THUNDERBIRD & TORINO

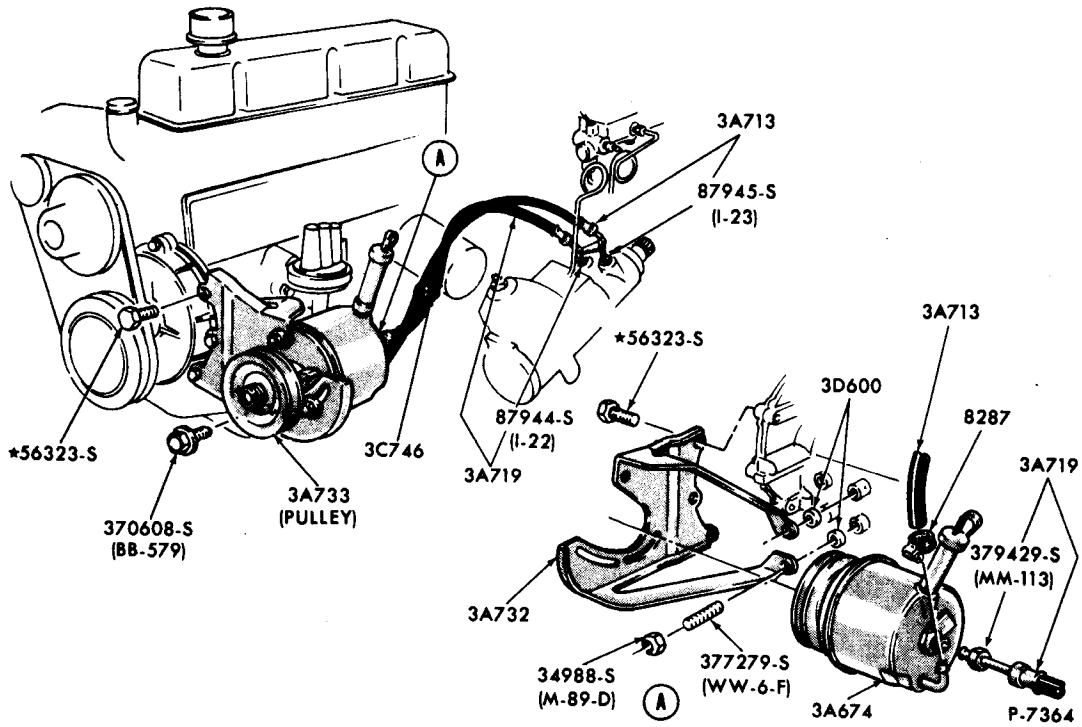


POWER STEERING PUMP INSTALLATION - TYPICAL
1970/72 FORD - 6 CYL. 240, 1971/72 MUSTANG, 1972 TORINO - 6 CYL. 250

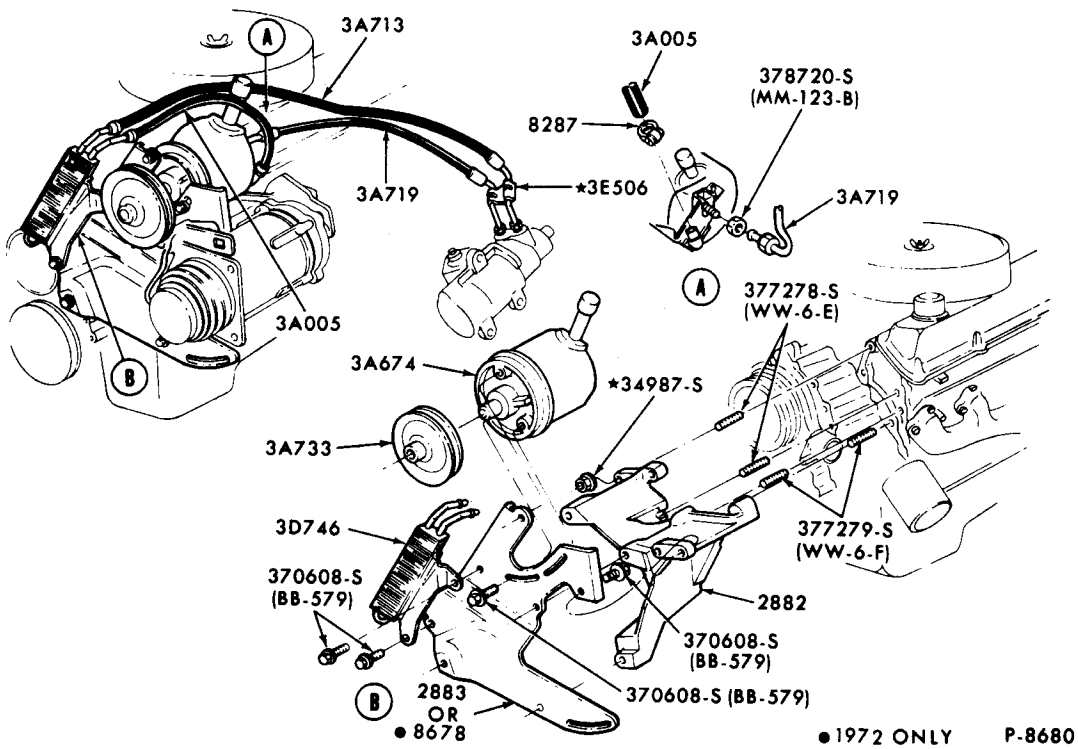


POWER STEERING PUMP INSTALLATION
1972 THUNDERBIRD - 8 CYL. 429 WITH AIR CONDITIONING AND 8 CYL. 460


COPYRIGHT © 1975 — FORD MOTOR COMPANY — DEARBORN, MICHIGAN

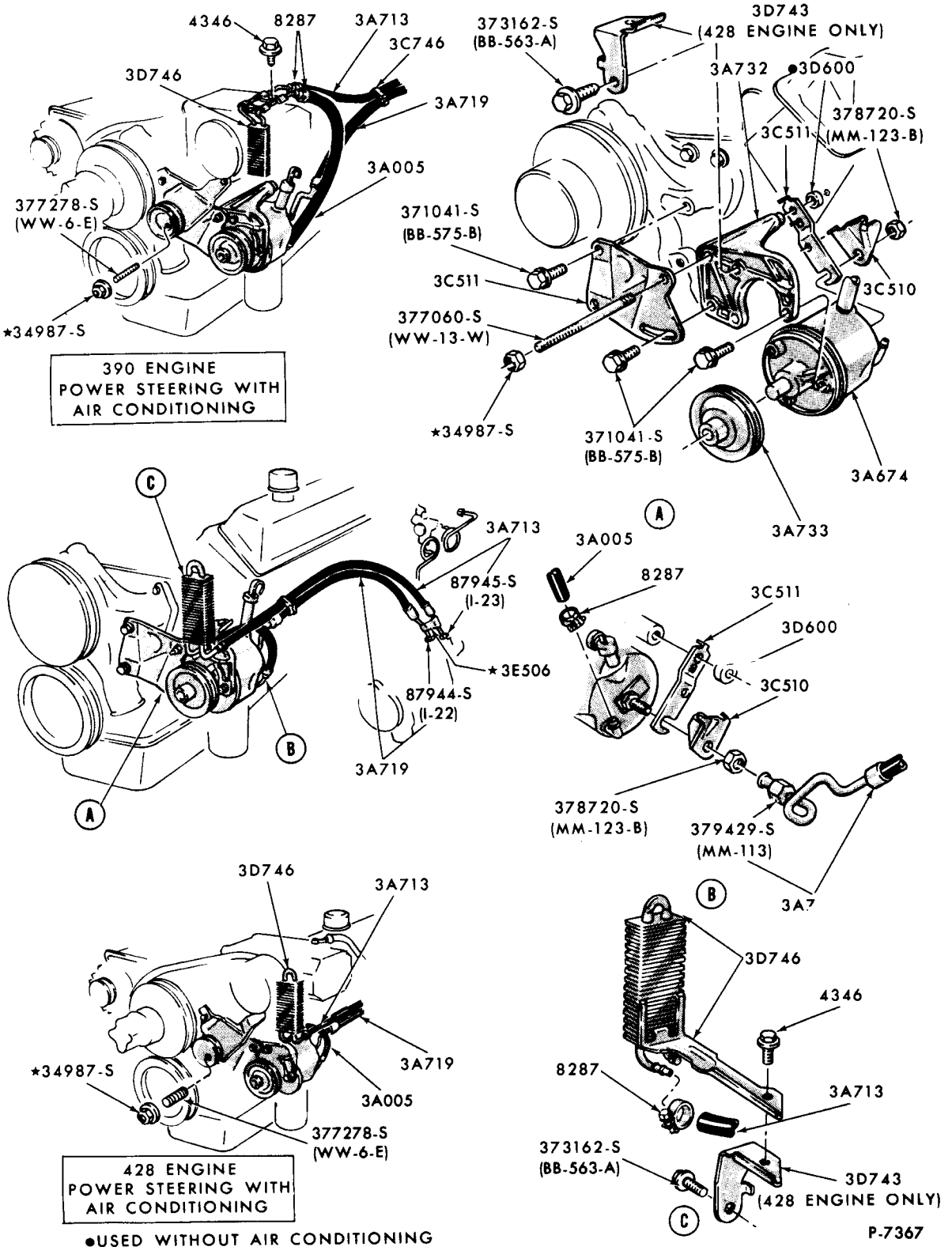


●USED WITHOUT AIR CONDITIONING

POWER STEERING PUMP INSTALLATION
1970/71 FORD - 8 CYL. 390, 428

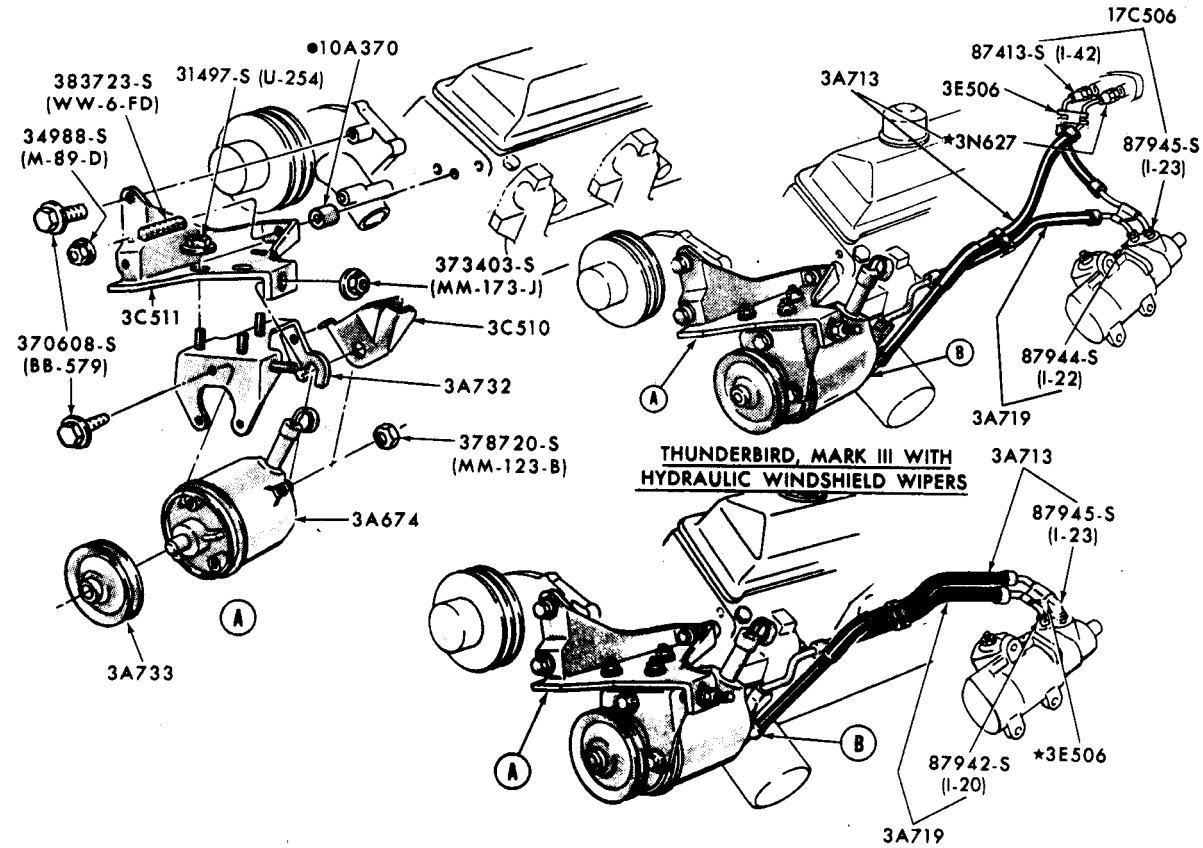


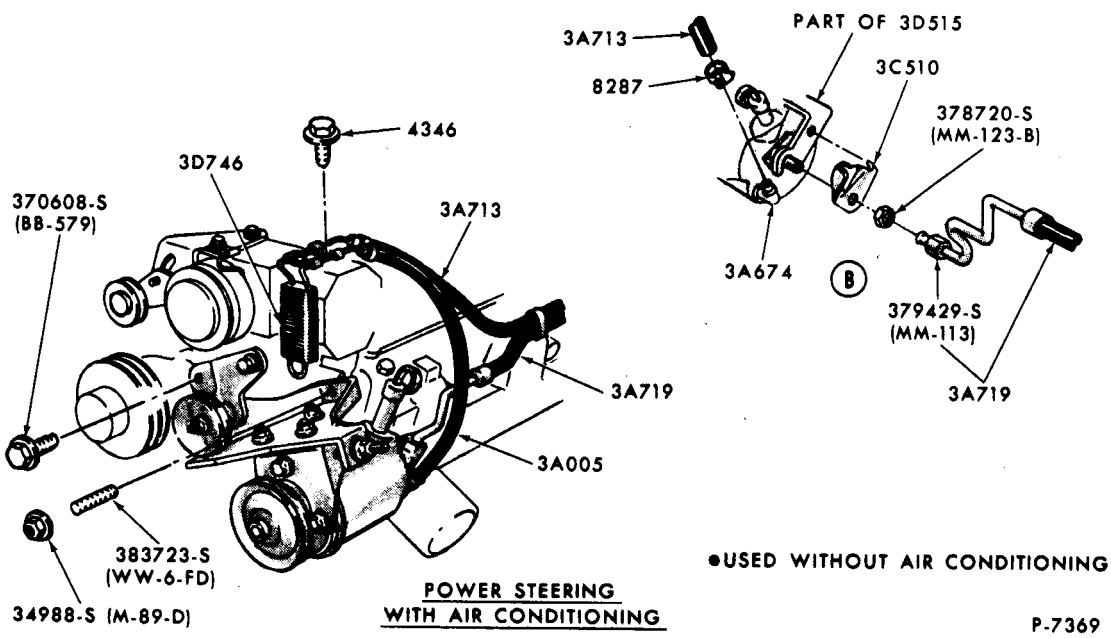


POWER STEERING PUMP INSTALLATION - TYPICAL
1970/72 FORD 8 CYL. 351, 400, 429, 1970/72 THUNDERBIRD 8 CYL. 400, (429 w/o A/C)


COPYRIGHT © 1975 — FORD MOTOR COMPANY — DEARBORN, MICHIGAN

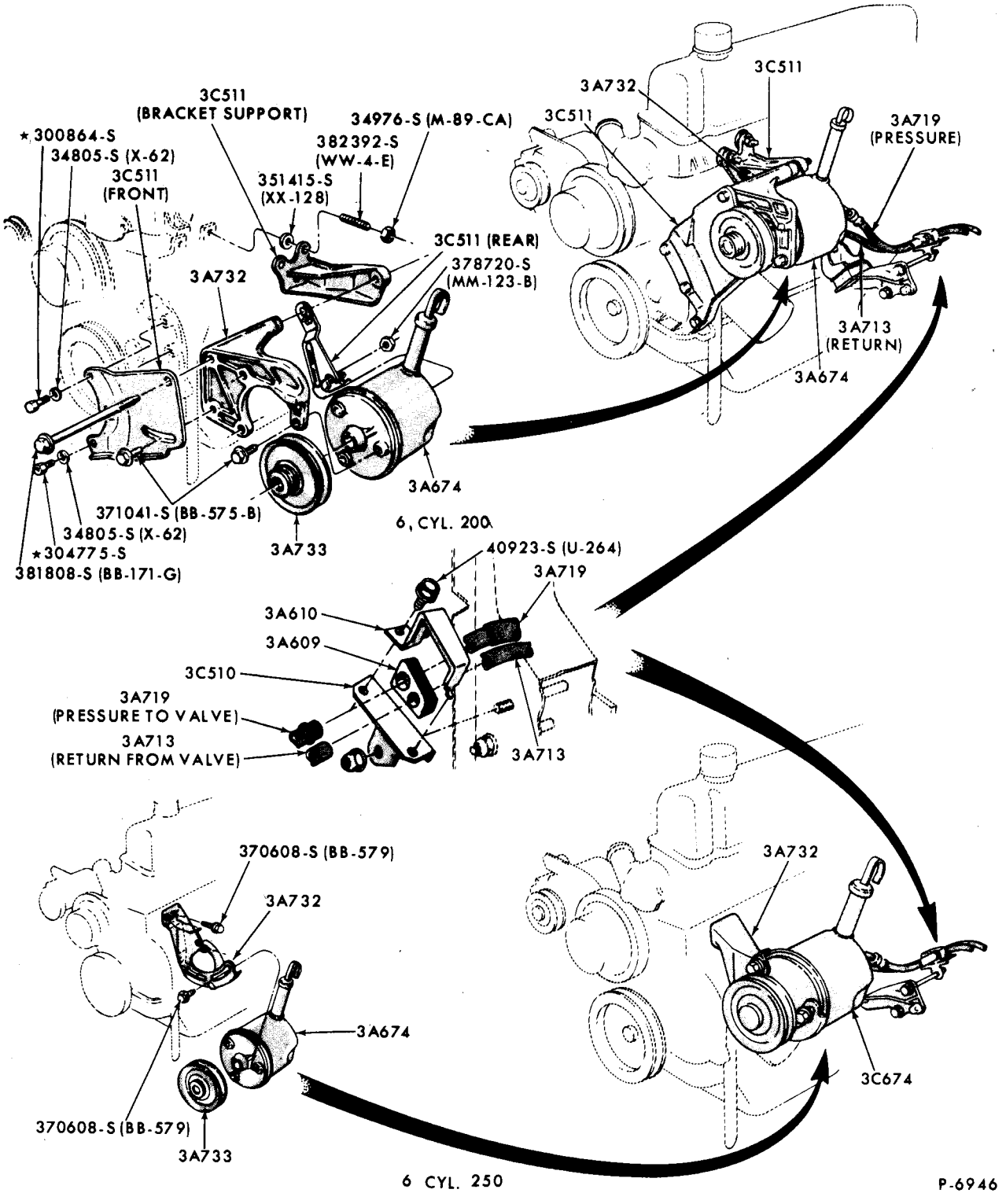


POWER STEERING PUMP INSTALLATION - 6 CYL. ENGINE
1969/71 FAIRLANE/TORINO, 1969/70 FALCON & MUSTANG
1970/72 MAVERICK - 6 CYL. 250

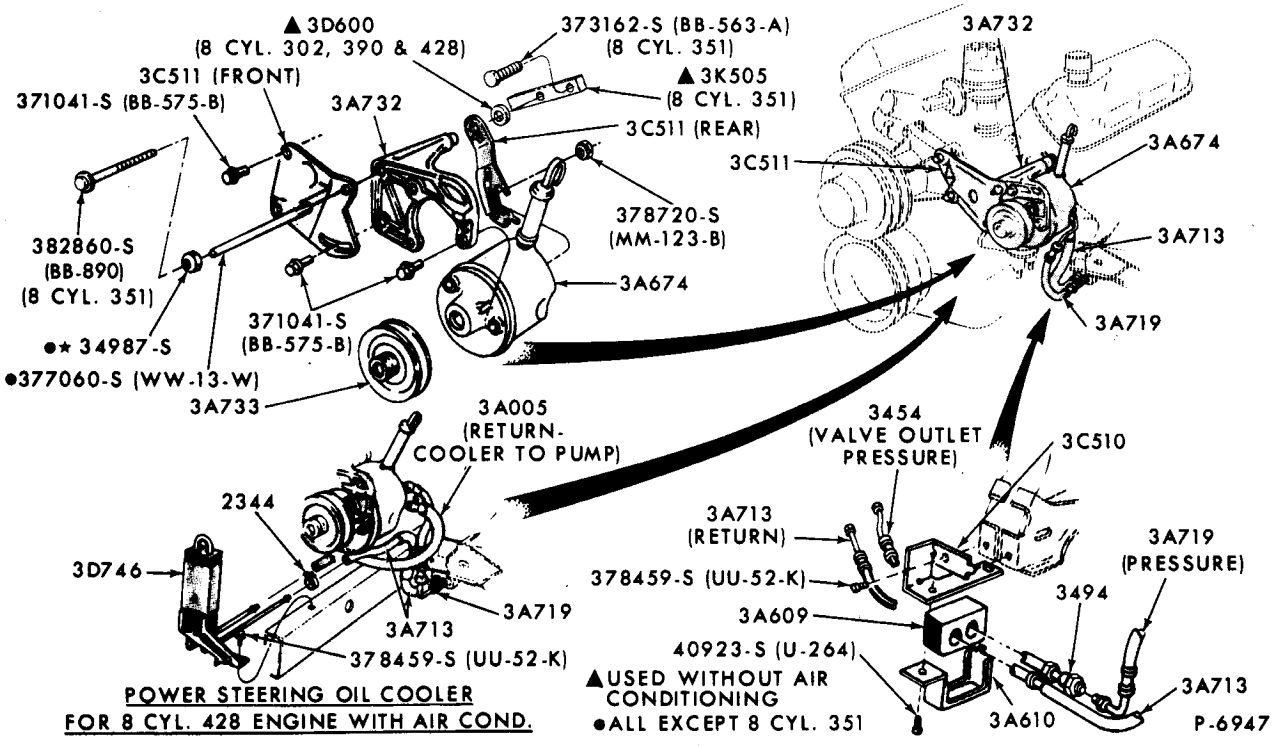


POWER STEERING PUMP INSTALLATION
1969 FAIRLANE/TORINO, FALCON - 8 CYL., MUSTANG
1970 MUSTANG - 8 CYL. 428


COPYRIGHT © 1975 — FORD MOTOR COMPANY — DEARBORN, MICHIGAN

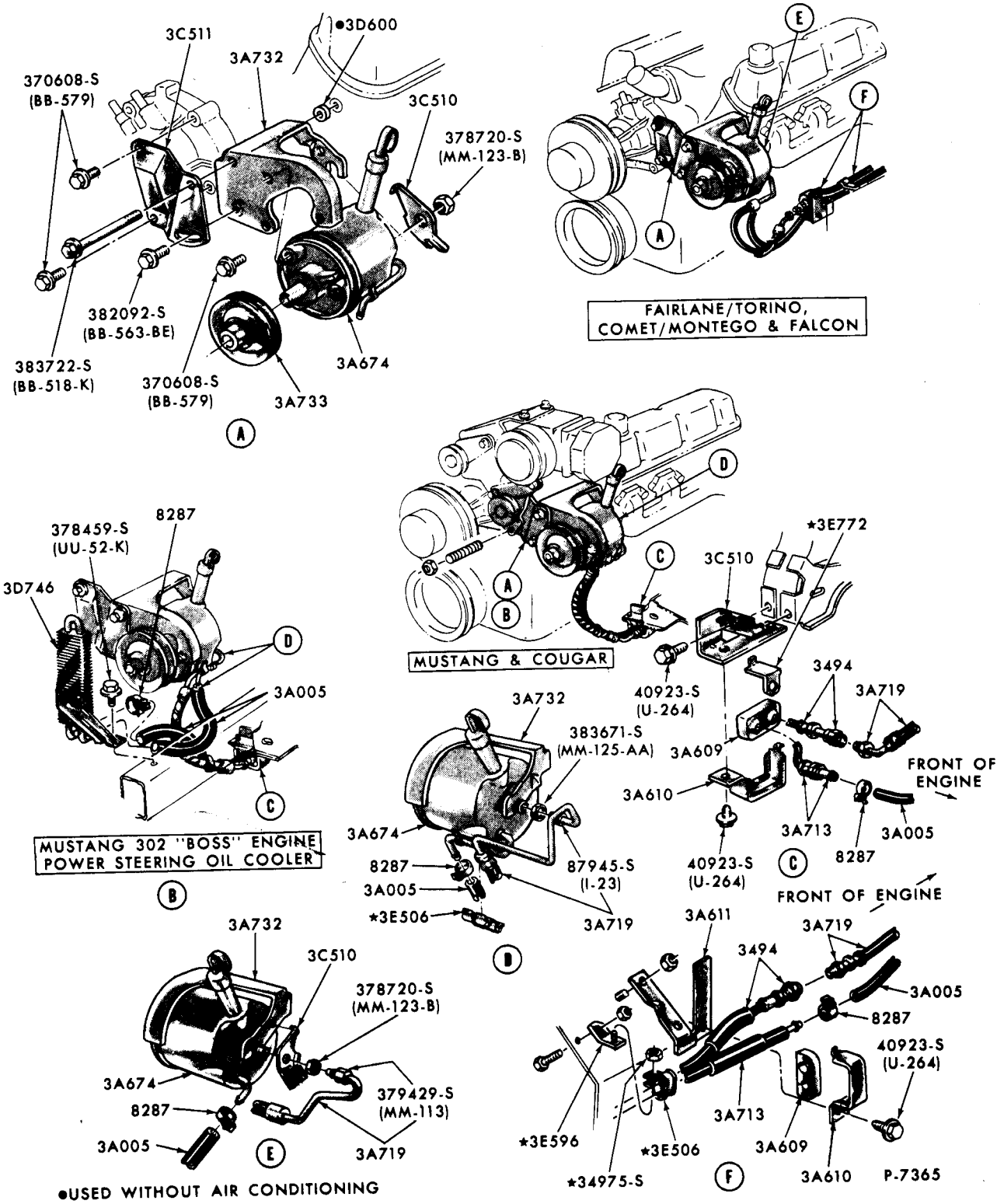


POWER STEERING PUMP INSTALLATION

1970/71 FAIRLANE/TORINO - 8 CYL. 302,351, 1970 FALCON, MUSTANG - 8 CYL. 302,351

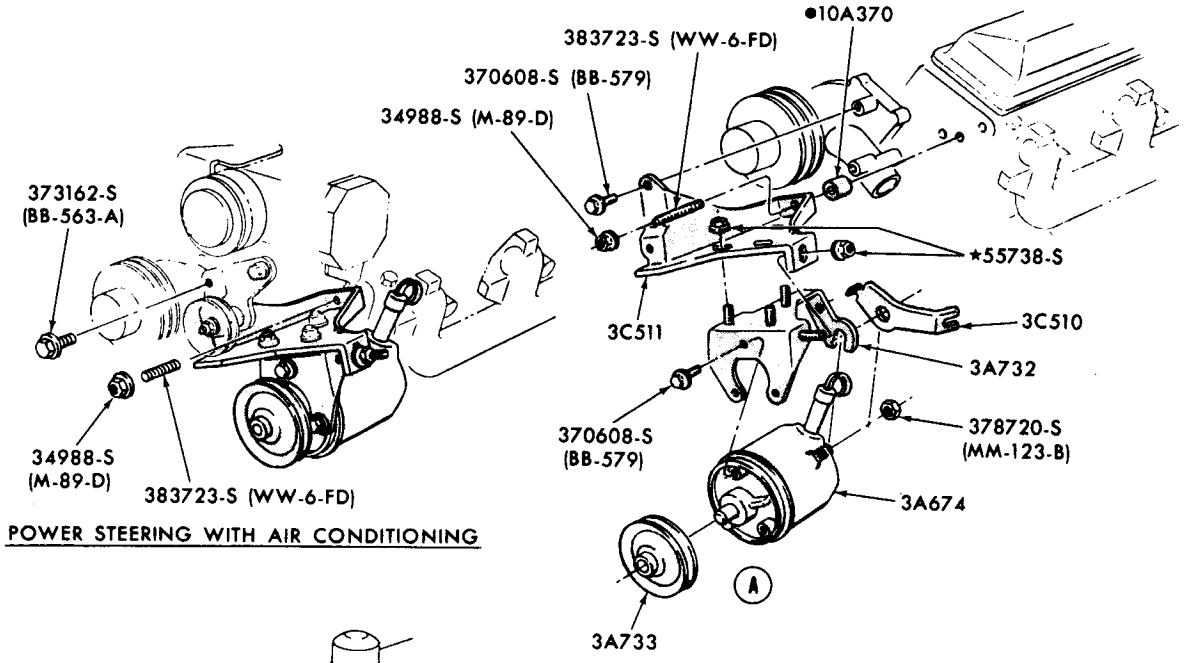


POWER STEERING WITH AIR CONDITIONING

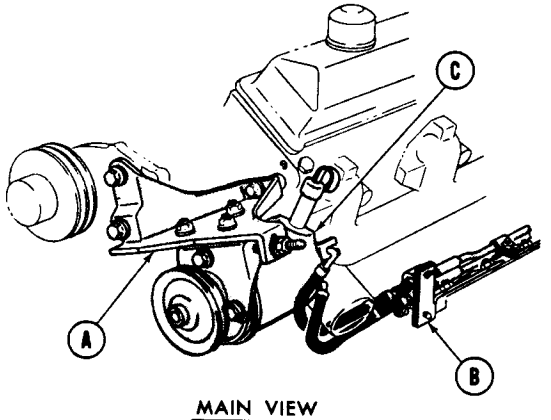


MAIN VIEW

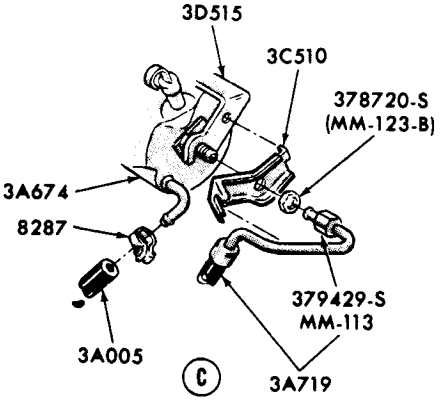


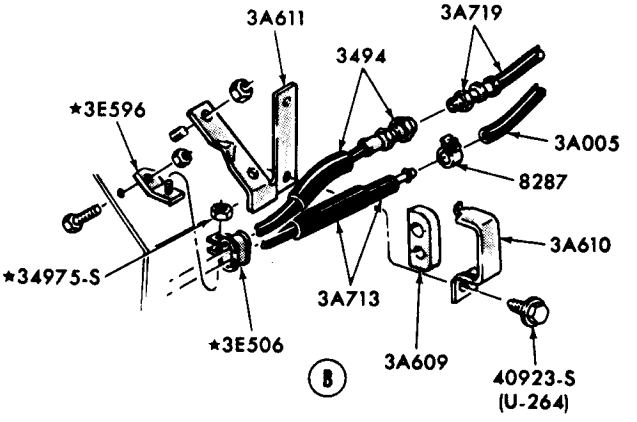


• USED WITHOUT AIR CONDITIONING

FAIRLANE/TORINO & COMET/MONTEGO

P-7368

POWER STEERING PUMP INSTALLATION
1970/71 FAIRLANE/TORINO - 8 CYLINDER 429


COPYRIGHT © 1975 — FORD MOTOR COMPANY — DEARBORN, MICHIGAN

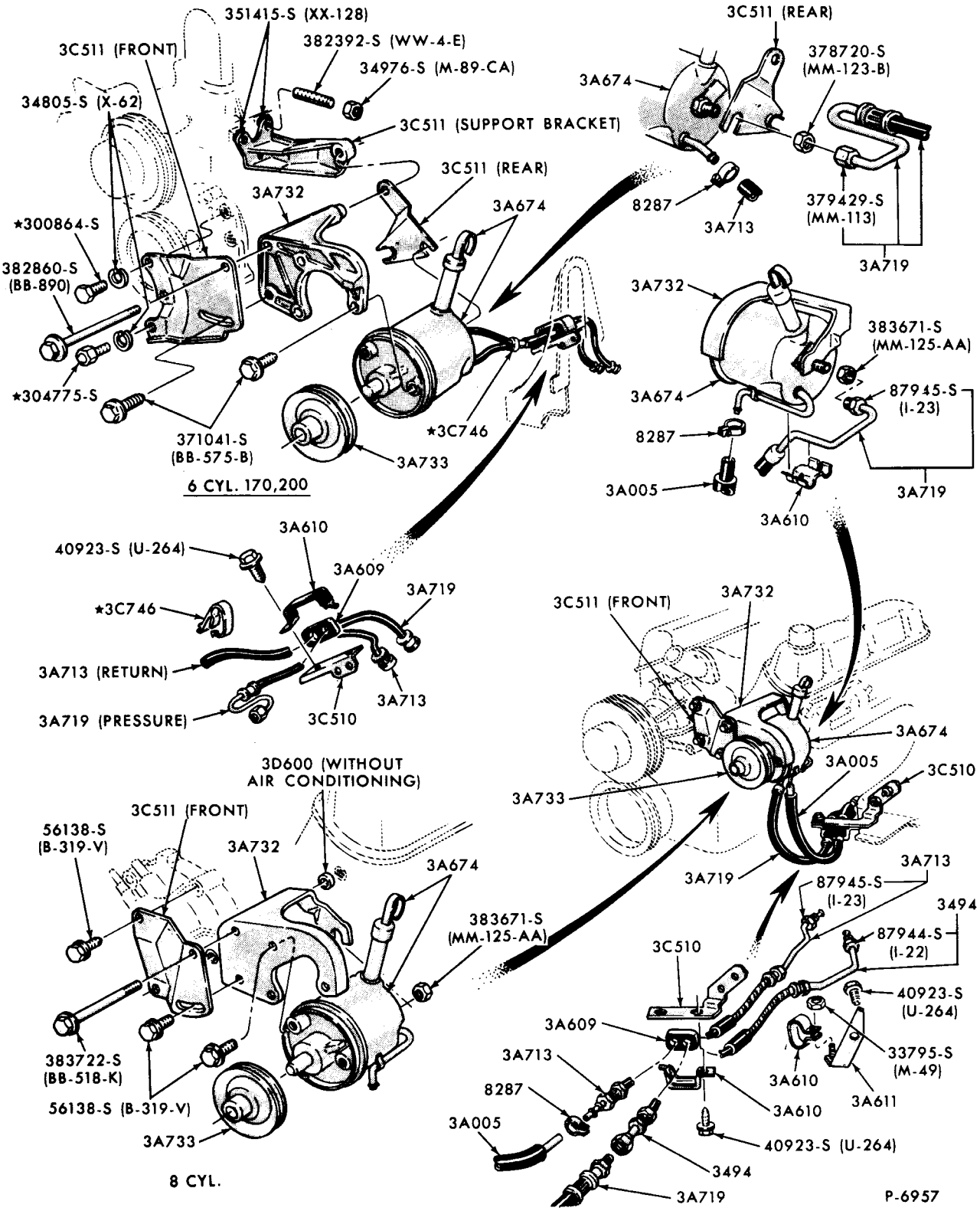


POWER STEERING PUMP INSTALLATION
1970/72 MAVERICK

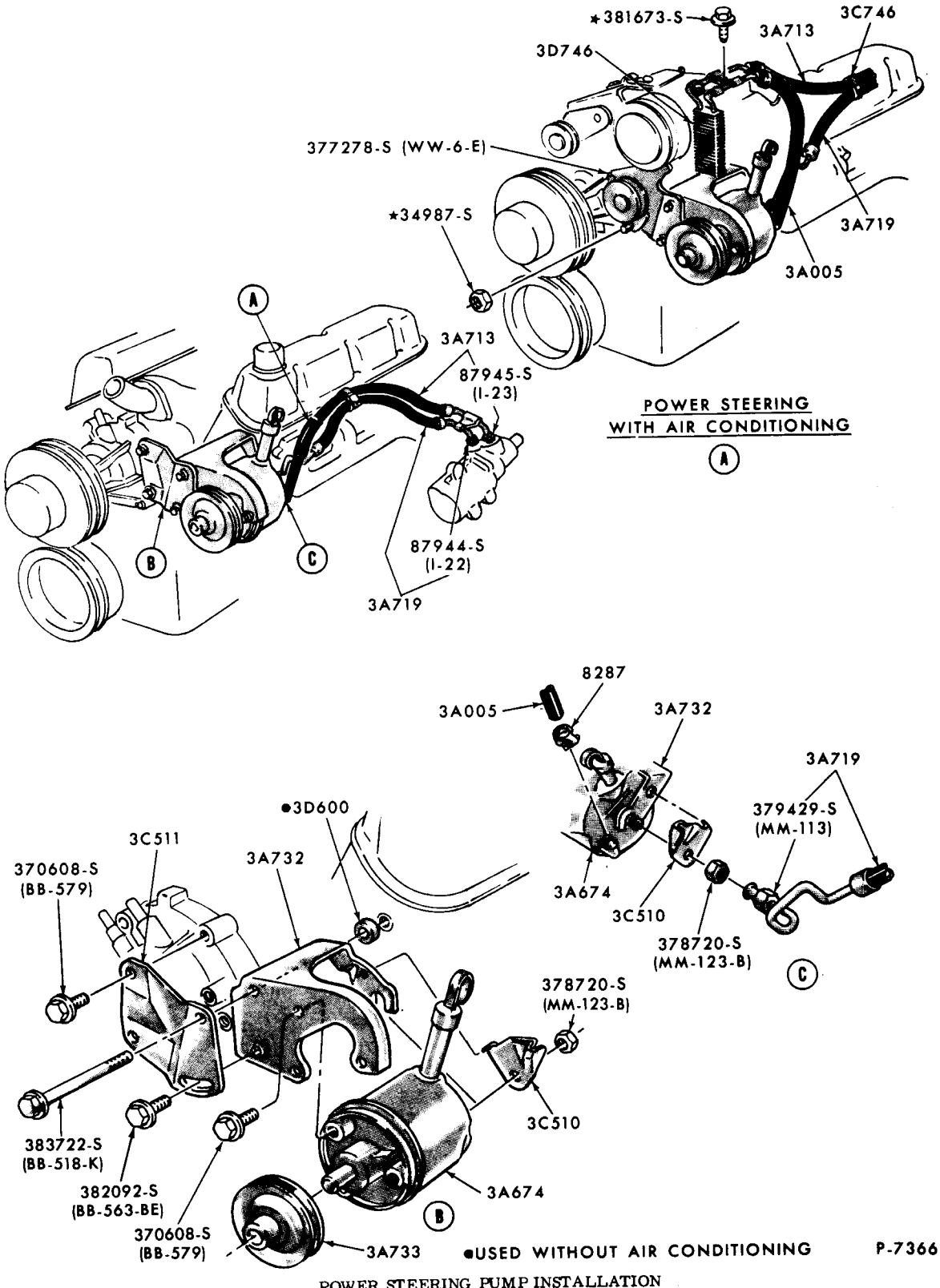


POWER STEERING PUMP INSTALLATION
1970/72 FORD - 8 CYL. 302
1970 FORD - 8 CYL. 351


COPYRIGHT © 1975 — FORD MOTOR COMPANY — DEARBORN, MICHIGAN

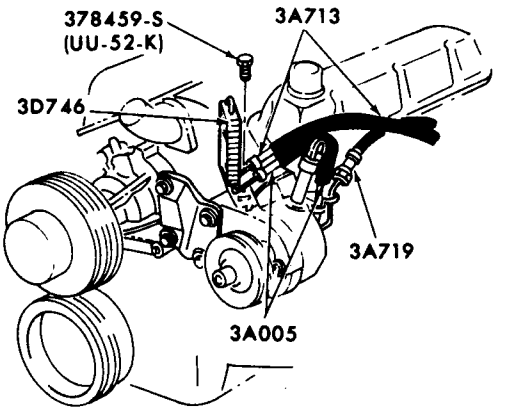


POWER STEERING WITHOUT AIR CONDITIONING

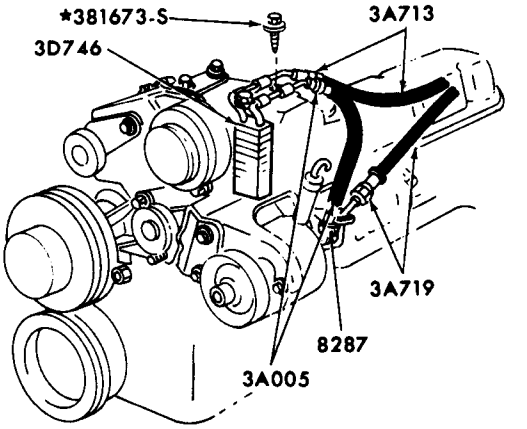


POWER STEERING WITH AIR CONDITIONING

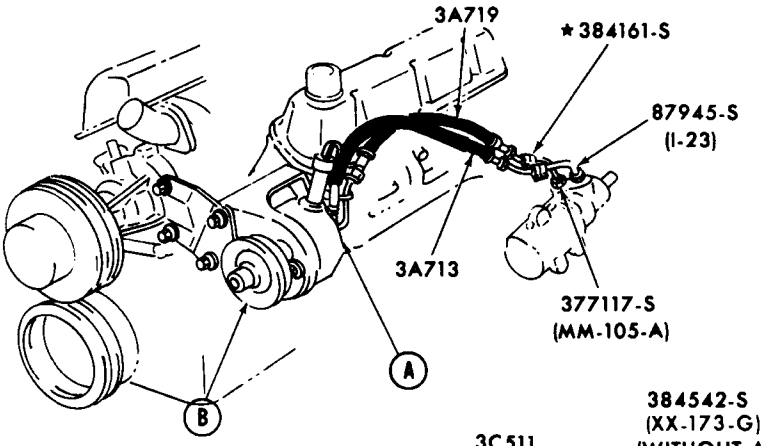


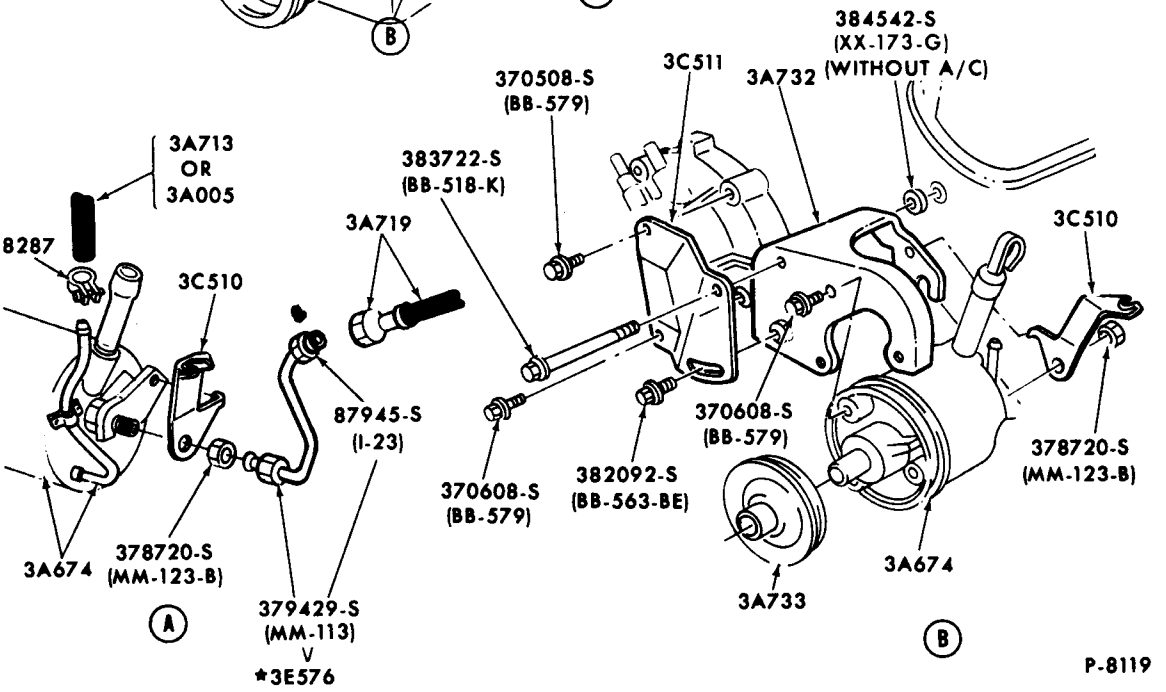


POWER STEERING PUMP INSTALLATION
1971/72 MUSTANG - 8 CYL. 302, 351, 1972 TORINO - 8 CYL. 302 (w/o A/C), 351-C

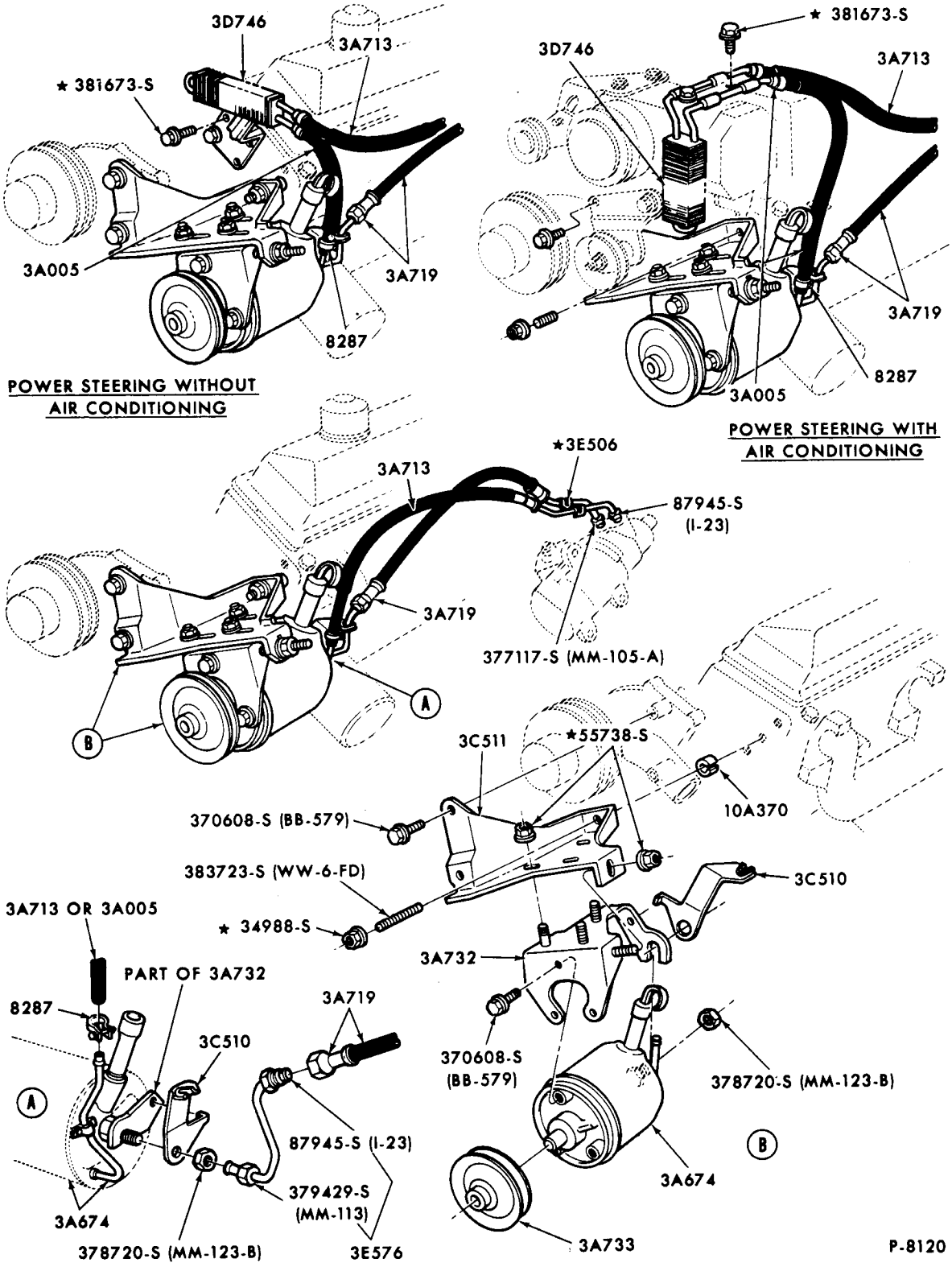


POWER STEERING PUMP INSTALLATION
1971 MUSTANG - 8 CYL. 429, 1972 TORINO - 8 CYL. 302 (W/A/C), 351-W, 400, 429


COPYRIGHT © 1975 — FORD MOTOR COMPANY — DEARBORN, MICHIGAN

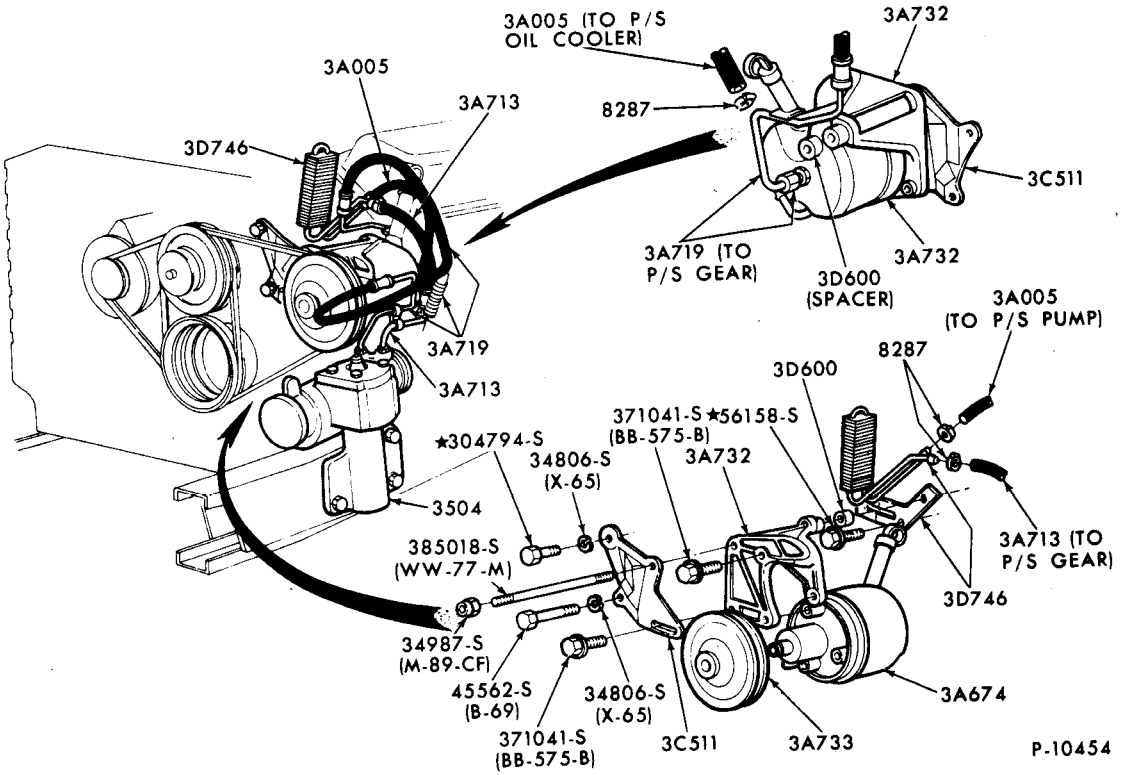


POWER STEERING PUMP INSTALLATION
1972 BRONCO-8 CYLINDER 302