INDEX

THIS INDEX SECTION INCLUDES THE FOLLOWING MAJOR GROUPS:

CLUTCH & CLUTCH PEDAL
GEAR SHIFT MECHANISM
MANUAL TRANSMISSION
OVERDRIVE TRANSMISSION
STEERING COLUMN & SHIFT PARTS
TRANSFER CASE

TITLE	TRANS.	SECTION	PAGE	ILLUS. NO.
1965				
A (FORD)				
EXTERNAL PARTS				
Clutch & clutch pedal	All	75	1	P-4595
Shift mechanism				
Steering column & column shift	All 3/S	72	2	P-4794
- floor shift	4/S	35	1	P-5495
Gear shift mechanism - console or floor mtd. - Ford 4 speed	F/4/S	73	2	P-5809
INTERNAL PARTS				
3 speed overdrive trans. - less extension	O/D	70	1	P-1914
- extension - 6 & 8 cyl. 240, 289	O/D	70	2	P-2228
- 8 cyl. 390	O/D	70	3	P-2144
Gear shift and interlock linkage	O/D	72	1	P-3917
3 speed manual transmission - 3.03 type	3/S	70	5	P-4012
4 speed manual trans. - Ford 4 speed	4/S	70	8	P-4424
B (FAIRLANE)				
EXTERNAL PARTS				
Clutch & clutch pedal	All	75	3	P-3738
Clutch pedal	All	75	2	P-3674
Shift mechanism				
Steering column - column shift	All 3/S	72	3	P-3712
- floor shift	4/S	35	2	P-3724
Gear shift mechanism - console or floor mtd.				
- Ford 4 speed	F/4/S	73	4	P-5810
- Warner 4 speed	W/4/S	73	1	P-3745
INTERNAL PARTS				
3 speed overdrive trans. - less extension	O/D	70	1	P-1914
- extension	O/D	70	2	P-2228
3 speed manual trans. - 2.77 type	3/S	70	4	P-2966
- 3.03 type	3/S	70	5	P-4012
4 speed manual trans.				
- Ford 4 speed	F/4/S	70	8	P-4424
- Warner 4 speed less forks, levers & cover	W/4/S	70	7	P-3744
- Warner 4 speed forks, levers & cover	W/4/S	73	1	P-3745
F (MUSTANG)				
EXTERNAL PARTS				
Clutch, clutch pedal	All	75	5	P-4472
Shift mechanism				
Steering column - floor shift	All	35	4	P-6366
Gear shift mechanism - console or floor mtd.				
- 3 speed trans.	3/S	73	3	P-4516
- Ford 4 speed	F/4/S	73	4	P-5810
- Warner 4 speed	W/4/S	73	1	P-3745
- Dagenham 4 speed	D/4/S	73	5	P-3904

COPYRIGHT © 1975 — FORD MOTOR COMPANY — DEARBORN, MICHIGAN

INDEX

TITLE	TRANS.	SECTION	PAGE	ILLUS. NO.
1965				
F (MUSTANG)				
INTERNAL PARTS				
3 speed manual trans. - 2.77 type	3/S	70	4	P-2966
- 3.03 type	3/S	70	5	P-4012
4 speed manual trans.				
- Ford 4 speed	F/4/S	70	8	P-4424
- Warner 4 speed less forks, levers & cover	W/4/S	70	7	P-3744
- Warner 4 speed forks, levers & cover	W/4/S	73	1	P-3745
- Dagenham 4 speed less forks, levers & cover	D/4/S	70	6	P-3903
- Dagenham 4 speed forks, levers & cover	D/4/S	73	5	P-3904
X (FALCON)				
EXTERNAL PARTS				
Clutch & related parts	All	75	8	P-3141
Clutch pedal & brake pedal	All	75	7	P-3130
Shift mechanism				
Steering column - column shift	3/S	72	4	P-4600
- floor shift	All 4/S	35	4	P-6366
Gear shift mechanism - console or floor mtd.				
- Ford 4 speed	F/4/S	73	4	P-5810
- Warner 4 speed	W/4/S	73	1	P-3745
INTERNAL PARTS				
3 speed manual trans. - 2.77 type	3/S	70	4	P-2966
- 3.03 type	3/S	70	5	P-4012
4 speed manual trans.				
- Ford 4 speed	F/4/S	70	8	P-4424
- Warner 4 speed less forks, levers & cover	W/4/S	70	7	P-3744
- Warner 4 speed forks, levers & cover	W/4/S	73	1	P-3745
1966				
A (FORD)				
EXTERNAL PARTS				
Clutch & clutch pedal	All	75	1	P-4595
Shift mechanism				
Steering column - column shift	All 3/S	72	2	P-4794
- floor shift	All	35	1	P-5495
Gear shift mechanism - console or floor mtd.				
- Ford 4 speed	F/4/S	73	2	P-5809
INTERNAL PARTS				
3 speed overdrive trans. - less extension	O/D	70	1	P-1914
- extension-6 & 8 cyl.240,289	O/D	70	2	P-2228
- 8 cyl.352,390	O/D	70	3	P-2144
Gear shift & interlock linkage	O/D	72	1	P-3917
3 speed manual transmission - 3.03 type	3/S	70	5	P-4012
4 speed manual trans. - Ford 4 speed	F/4/S	70	8	P-4424

INDEX

TITLE	TRANS.	SECTION	PAGE	ILLUS. NO.
1966				
B (FAIRLANE)				
EXTERNAL PARTS				
Clutch & clutch pedal	All	75	4	P-4983
Shift mechanism				
Steering column - column shift	All 3/S	72	5	P-5000
- floor shift	All	35	3	P-5138
Gear shift mechanism - console or floor mtd.				
- 3 speed trans.	3/S	73	3	P-4516
- Ford 4 speed	F/4/S	73	4	P-5810
INTERNAL PARTS				
3 speed overdrive trans. - less extension	O/D	70	1	P-1914
- extension	O/D	70	2	P-2228
3 speed manual trans. - 2.77 type	3/S	70	4	P-2966
- 3.03 type	3/S	70	5	P-4012
4 speed manual trans. - Ford 4 speed	F/4/S	70	8	P-4424
F (MUSTANG)				
EXTERNAL PARTS				
Clutch & clutch pedal	All	75	5	P-4472
Shift mechanism				
Steering column - floor shift	All	35	4	P-6366
Gear shift mechanism - console or floor mtd.				
- 3 speed trans.	3/S	73	3	P-4516
- Ford 4 speed	F/4/S	73	4	P-5810
- Warner 4 speed	W/4/S	73	1	P-3745
- Dagenham 4 speed	D/4/S	73	5	P-3904
INTERNAL PARTS				
3 speed manual trans. - 2.77 type	3/S	70	4	P-2966
- 3.03 type	3/S	70	5	P-4012
4 speed manual trans.				
- Ford 4 speed	F/4/S	70	8	P-4424
- Warner 4 speed less forks, levers & cover	W/4/S	70	7	P-3744
- Warner 4 speed forks, levers & cover	W/4/S	73	1	P-3745
- Dagenham 4 speed less forks, - levers & cover	D/4/S	70	6	P-3903
- Dagenham 4 speed forks, levers & cover	D/4/S	73	5	P-3904
U (BRONCO)				
EXTERNAL PARTS				
Clutch & clutch pedal	3/S	75	6	P-4972
Shift mechanism				
Steering column & trans. shift mechanism	3/S	35	7	P-4962
Transfer case shift linkage - Before Ser. 830,001		72	6	P-5229
- From Ser. 830,001		72	6	P-5202
INTERNAL PARTS				
3 speed manual trans. - 3.03 type	3/S	70	5	P-4012
Transfer case (7E028) parts		70	9	P-5149

COPYRIGHT © 1975 — FORD MOTOR COMPANY — DEARBORN, MICHIGAN

INDEX

TITLE	TRANS.	SECTION	PAGE	ILLUS. NO.
1966				
X (FALCON)				
EXTERNAL PARTS				
Clutch pedal	All	75	4	P-4983
Shift mechanism				
Steering column - column shift	3/S	72	5	P-5000
- floor shift	All 4/S	35	3	P-5138
Gear shift mechanism - console or floor mtd.				
- Ford 4 speed	F/4/S	73	4	P-5810
- Warner 4 speed	W/4/S	73	1	P-3745
INTERNAL PARTS				
3 speed manual trans. - 2.77 type	3/S	70	4	P-2966
- 3.03 type	3/S	70	5	P-4012
4 speed manual trans. - Ford design	F/4/S	70	8	P-4424
- Warner 4 speed less forks, levers & cover	W/4/S	70	7	P-3744
- Warner 4 speed forks, levers & cover	W/4/S	73	1	P-3745
1967				
A (FORD)				
EXTERNAL PARTS				
Clutch & clutch pedal	All	75	1	P-4595
Shift mechanism				
Steering column - column shift	All 3/S	72	7	P-5496
- floor shift	4/S	35	1	P-5495
Gear shift mechanism - console or floor mtd.				
- Ford 4 speed	F/4/S	73	2	P-5809
INTERNAL PARTS				
3 speed overdrive trans. - less extension	O/D	70	1	P-1914
- extension - 6 cyl. 240, 289	O/D	70	2	P-2228
- 8 cyl. 352, 390	O/D	70	3	P-2144
Gear shift & interlock linkage	O/D	72	1	P-3917
3 speed manual transmission - 3.03 type	3/S	70	5	P-4012
4 speed manual trans. - Ford design	F/4/S	70	8	P-4424
B (FAIRLANE)				
EXTERNAL PARTS				
Clutch & clutch pedal	All	75	9	P-5514
Shift mechanism				
Steering column - column shift	All 3/S	72	5	P-5000
- floor shift	All	35	3	P-5138
Gear shift mechanism - console or floor mtd.				
- 3 speed trans.	3/S	73	3	P-4516
- Ford 4 speed	F/4/S	73	4	P-5810
INTERNAL PARTS				
3 speed overdrive trans. - less extension	O/D	70	1	P-1914
- extension	O/D	70	2	P-2228
3 speed manual trans. - 3.03 type	3/S	70	5	P-4012
4 speed manual trans. - Ford 4 speed	F/4/S	70	8	P-4424

INDEX

TITLE	TRANS.	SECTION	PAGE	ILLUS. NO.
1967				
F (MUSTANG)				
EXTERNAL PARTS				
Clutch & clutch pedal	All	75	11	P-5513
Shift mechanism				
Steering column - floor shift - fixed wheel	All	35	6	P-5710
- tilt wheel	All	35	5	P-5622
Gear shift mechanism - console or floor mtd.				
- Ford 4 speed	F/4/S	73	4	P-5810
- 3 speed trans.	3/S	73	3	P-4516
INTERNAL PARTS				
3 speed manual trans. - 3.03 type	3/S	70	5	P-4012
4 speed manual trans. - Ford 4 speed	F/4/S	70	8	P-4424
U (BRONCO)				
EXTERNAL PARTS				
Clutch & clutch pedal	3/S	75	6	P-4972
Shift mechanism				
Steering column & trans. shift mechanism	3/S	35	7	P-4962
Transfer case shift linkage		72	6	P-5202
INTERNAL PARTS				
3 speed manual trans. - 3.03 type	3/S	70	5	P-4012
Transfer case (7E028) parts		70	9	P-5149
X (FALCON)				
EXTERNAL PARTS				
Clutch & clutch pedal	All	75	9	P-5514
Shift mechanism				
Steering column - column shift	3/S	72	5	P-5000
- floor shift	All 4/S	35	3	P-5138
Gear shift mechanism - console or floor mtd.				
- Ford 4 speed	F/4/S	73	4	P-5810
INTERNAL PARTS				
3 speed manual trans. - 2.77 type	3/S	70	4	P-2966
- 3.03 type	3/S	70	5	P-4012
4 speed manual trans. - Ford 4 speed	F/4/S	70	8	P-4424
1968				
A (FORD)				
EXTERNAL PARTS				
Clutch & clutch pedal	All	75	1	P-4595
Shift mechanism				
Steering column - column shift	3/S	72	8	P-5985
- floor shift - fixed	4/S	35	8	P-5984
- tilt	4/S	35	9	P-6016
Gear shift mechanism - console or floor mtd.				
- Ford 4 speed	F/4/S	73	6	P-6195
INTERNAL PARTS				
3 speed manual trans. - 3.03 type	3/S	70	5	P-4012
4 speed manual trans. - Ford 4 speed	F/4/S	70	8	P-4424

COPYRIGHT © 1975 — FORD MOTOR COMPANY — DEARBORN, MICHIGAN

INDEX

1968

TITLE	TRANS.	SECTION	PAGE	ILLUS. NO.
B (FAIRLANE/TORINO)				
EXTERNAL PARTS				
Clutch & clutch pedal	All	75	10	P-6541
Shift mechanism				
Steering column - column shift	3/S	72	9	P-6019
- floor shift	All	35	10	P-6018
Gear shift mechanism - console or floor mtd.				
- 3 speed trans.	3/S	73	3	P-4516
- Ford 4 speed	F/4/S	73	4	P-5810
INTERNAL PARTS				
3 speed manual trans. - 3.03 type	3/S	70	5	P-4012
4 speed manual trans. - Ford 4 speed	F/4/S	70	8	P-4424
F (MUSTANG)				
EXTERNAL PARTS				
Clutch pedal	All	75	11	P-5513
Shift mechanism				
Steering column - floor shift - fixed wheel	All	35	12	P-5770
- tilt wheel	All	35	11	P-5769
Gear shift mechanism - console or floor mtd.				
- 3 speed trans.	3/S	73	3	P-4516
- Ford 4 speed	F/4/S	73	4	P-5810
INTERNAL PARTS				
3 speed manual trans. - 3.03 type	3/S	70	5	P-4012
4 speed manual trans. - Ford 4 speed	F/4/S	70	8	P-4424
U (BRONCO)				
EXTERNAL PARTS				
Clutch & clutch pedal	3/S	75	6	P-4972
Shift mechanism				
Steering column & trans. shift mechanism	3/S	35	7	P-4962
Transfer case shift linkage		72	6	P-5202
INTERNAL PARTS				
3 speed manual trans. - 3.03 type	3/S	70	5	P-4012
Transfer case (7E028) parts		70	9	P-5149
X (FALCON)				
EXTERNAL PARTS				
Clutch & clutch pedal	All	75	10	P-6541
Shift mechanism				
Steering column - column shift	3/S	72	9	P-6019
- floor shift	3/S	35	10	P-6018
Gear shift mechanism - console or floor mtd.				
- Ford 4 speed	F/4/S	73	4	P-5810
INTERNAL PARTS				
3 speed manual trans. - 3.03 type	3/S	70	5	P-4012
4 speed manual trans. - Ford 4 speed	F/4/S	70	8	P-4424

INDEX

TITLE	TRANS.	SECTION	PAGE	ILLUS. NO.
1969				
A (FORD)				
EXTERNAL PARTS				
Clutch & clutch pedal	All	75	12	P-6724
Shift mechanism				
Steering column - column shift	3/S	72	10	P-6785
- floor shift - fixed	4/S	35	13	P-6786
- tilt	4/S	35	14	P-6787
Gear shift mechanism - console or floor mtd. - Ford 4 speed	F/4/S	73	6	P-6195
INTERNAL PARTS				
3 speed manual trans. - 3.03 type	3/S	70	5	P-4012
4 speed manual trans. - Ford 4 speed	F/4/S	70	8	P-4424
B (FAIRLANE/TORINO)				
EXTERNAL PARTS				
Clutch & clutch pedal	All	75	10	P-6541
Shift mechanism				
Steering column - column shift	3/S	72	9	P-6019
- floor shift	All	35	10	P-6018
Gear shift mechanism - console or floor mtd.				
- 3 speed trans.	3/S	73	7	P-6794
- Ford 4 speed	F/4/S	73	8	P-6793
INTERNAL PARTS				
3 speed manual trans. - 3.03 type	3/T	70	5	P-4012
4 speed manual trans. - Ford 4 speed	F/4/S	70	8	P-4424
F (MUSTANG)				
EXTERNAL PARTS				
Clutch pedal	All	75	13	P-6756
Shift mechanism				
Steering column - floor shift - fixed wheel	All	35	15	P-6781
- tilt wheel	All	35	16	P-6782
Gear shift mechanism - console or floor mtd.				
- 3 speed trans.	3/S	73	7	P-6794
- Ford 4 speed	F/4/S	73	8	P-6793
INTERNAL PARTS				
3 speed manual trans. - 3.03 type	3/S	70	5	P-4012
4 speed manual trans. - Ford 4 speed	F/4/S	70	8	P-4424
U (BRONCO)				
EXTERNAL PARTS				
Clutch & clutch pedal	3/S	75	6	P-4972
Shift mechanism				
Steering column & trans. shift mechanism	3/S	35	7	P-4962
Transfer case shift linkage		72	6	P-5202
INTERNAL PARTS				
3 speed manual trans. - 3.03 type	3/S	70	5	P-4012
Transfer case (7E028) parts		70	9	P-5149

COPYRIGHT © 1975 — FORD MOTOR COMPANY — DEARBORN, MICHIGAN

INDEX

TITLE	TRANS.	SECTION	PAGE	ILLUS. NO.
1969				
X (FALCON)				
EXTERNAL PARTS				
Clutch & clutch pedal	All	75	10	P-6541
Shift mechanism				
Steering column - column shift	3/S	72	9	P-6019
Gear shift mechanism - console or floor mtd. - Ford 4 speed	F/4/S	73	8	P-6793
INTERNAL PARTS				
3 speed manual trans. - 3.03 type	3/S	70	5	P-4012
1970				
A (FORD)				
EXTERNAL PARTS				
Clutch & clutch pedal	All	75	12	P-6724
Shift mechanism				
Steering column - column shift	3/S	72	12	P-7244
INTERNAL PARTS				
3 speed manual trans. - 3.03 type	3/S	70	5	P-4012
B (FAIRLANE/TORINO)				
B (FALCON)-FROM 1/2/70				
EXTERNAL PARTS				
Clutch & clutch pedal	All	75	15	P-7306
Shift mechanism				
Steering column - column shift	3/S	72	13	P-7247
- floor shift	4/S	35	19	P-7248
Gear shift mechanism - console or floor mtd. - 3 speed trans.	3/S	73	7	P-6794
- 4 speed (Hurst)	4/S	73	9	P-7499
INTERNAL PARTS				
3 speed manual trans. - 3.03 type	3/S	70	5	P-4012
4 speed manual trans. - Ford 4 speed	F/4/S	70	8	P-4424
F (MUSTANG)				
EXTERNAL PARTS				
Clutch & clutch pedal	All	75	13	P-6756
Shift mechanism				
Steering column - floor shift - fixed wheel	All	35	20	P-7245
- tilt wheel	All	35	21	P-7246
Gear shift mechanism - console or floor mtd. - 3 speed trans.	3/S	73	7	P-6794
- 4 speed (Hurst)	4/S	73	9	P-7499
INTERNAL PARTS				
3 speed manual trans. - 3.03 type	3/S	70	5	P-4012
4 speed manual trans. - Ford 4 speed	F/4/S	70	8	P-4424
P (MAVERICK)				
EXTERNAL PARTS				
Clutch & clutch pedal	3/S	75	14	P-6883
Shift mechanism				
Steering column - column shift(non-locking)	3/S	72	11	P-6968
- column shift (locking)	3/S	72	14	P-7748
INTERNAL PARTS				
3 speed manual trans. - 3.03 type	3/S	70	5	P-4012

INDEX

TITLE	TRANS.	SECTION	PAGE	ILLUS. NO.
1970				
U (BRONCO)				
EXTERNAL PARTS				
Clutch & clutch pedal	3/S	75	6	P-4972
Transfer case shift linkage		72	6	P-5202
INTERNAL PARTS				
3 speed manual trans. & extension - 3.03 type	3/S	70	5	P-4012
Transfer case (7E028) parts		70	9	P-5149
X (FALCON) - BEFORE 1/2/70				
FOR UNITS BUILT FROM 1/2/70 REFER TO B (FALCON)				
EXTERNAL PARTS				
Clutch & clutch pedal	All	75	10	P-6541
Steering column - column shift (non-locking)	3/S	72	9	P-6019
INTERNAL PARTS				
3 speed manual trans. - 3.03 type	3/S	70	5	P-4012
1971				
A (FORD)				
EXTERNAL PARTS				
Clutch & clutch pedal	All	75	12	P-6724
Shift mechanism				
Steering column - column shift (locking)	3/S	72	12	P-7244
INTERNAL PARTS				
3 speed manual trans. - 3.03 type	3/S	70	5	P-4012
B (TORINO)				
EXTERNAL PARTS				
Clutch & clutch pedal	All	75	15	P-7306
Shift mechanism				
Steering column - column shift (locking)	3/S	72	13	P-7247
- floor shift	4/S	35	19	P-7248
Gear shift mechanism - console or floor mtd.				
- 3 speed trans.	3/S	73	7	P-6794
- 4 speed (Hurst)	4/S	73	9	P-7499
INTERNAL PARTS				
3 speed manual trans. - 3.03 type	3/S	70	5	P-4012
4 speed manual trans. - Ford 4 speed	F/4/S	70	8	P-4424

COPYRIGHT © 1975 — FORD MOTOR COMPANY — DEARBORN, MICHIGAN

INDEX

1971

F (MUSTANG)

TITLE	TRANS.	SECTION	PAGE	ILLUS. NO.
EXTERNAL PARTS				
Clutch & clutch pedal	All	75	16	P-8144
Shift mechanism				
Steering column - floor shift - fixed wheel	All	35	20	P-7245
- tilt wheel	All	35	21	P-7246
Gear shift mechanism - console or floor mtd.				
- 3 speed trans.	3/S	73	7	P-6794
- 4 speed (Hurst)	4/S	73	9	P-7499
INTERNAL PARTS				
3 speed manual trans. - 3.03 type	3/S	70	5	P-4012
4 speed manual trans. - Ford 4 speed	F/4/S	70	8	P-4424

L (PINTO)

TITLE	TRANS.	SECTION	PAGE	ILLUS. NO.
EXTERNAL PARTS				
Clutch & clutch pedal	All	75	17	P-7933
Shift mechanism				
Steering column	All	35	22	P-7961
Gear shift mechanism	All	73	10	P-7579
INTERNAL PARTS				
4 speed English design	4/S	70	10	P-8286
4 speed German design	4/S	70	11	P-8349

P (MAVERICK)

TITLE	TRANS.	SECTION	PAGE	ILLUS. NO.
EXTERNAL PARTS				
Clutch & clutch pedal	3/S	75	14	P-8822
Shift mechanism				
Steering column - column shift (locking)	3/S	72	14	P-7748
Gear shift mechanism - floor mounted	3/S	73	7	P-6794
INTERNAL PARTS				
3 speed manual trans. - 3.03 type	3/S	70	5	P-4012

U (BRONCO)

TITLE	TRANS.	SECTION	PAGE	ILLUS. NO.
EXTERNAL PARTS				
Clutch & clutch pedal	3/S	75	6	P-4972
Shift mechanism				
Steering column & trans. shift mechanism	3/S	35	7	P-4962
Transfer case shift linkage		72	6	P-5202
INTERNAL PARTS				
3 speed manual trans. & extension - 3.03 type	3/S	70	5	P-4012
Transfer case (7E028) parts		70	9	P-5149

INDEX

1972

B (TORINO)

TITLE	TRANS.	SECTION	PAGE	ILLUS. NO.
EXTERNAL PARTS				
Clutch & clutch pedal	All	75	18	P-8812
Shift mechanism				
Steering column - column shift (locking)	3/S	72	15	P-8625
- floor shift	4/S	35	24	P-8624
Gear shift mechanism - console or floor mtd. - 4 speed (Hurst)	4/S	73	9	P-7499
INTERNAL PARTS				
3 speed manual trans. - 3.03 type	3/S	70	12	P-9882
4 speed manual trans. - Ford 4 speed	F/4/S	70	13	P-9881

F (MUSTANG)

TITLE	TRANS.	SECTION	PAGE	ILLUS. NO.
EXTERNAL PARTS				
Clutch & clutch pedal	All	75	16	P-8144
Shift mechanism				
Steering column - floor shift - fixed wheel	All	35	20	P-7245
- tilt wheel	All	35	21	P-7246
Gear shift mechanism - console or floor mtd. - 3 speed trans.	3/S	73	7	P-6794
- 4 speed (Hurst)	4/S	73	9	P-7499
INTERNAL PARTS				
3 speed manual trans. - 3.03 type	3/S	70	12	P-9882
4 speed manual trans. - Ford 4 speed	F/4/S	70	13	P-9881

L (PINTO)

TITLE	TRANS.	SECTION	PAGE	ILLUS. NO.
EXTERNAL PARTS				
Clutch & clutch pedal	All	75	17	P-7933
Shift mechanism				
Steering column	All	35	22	P-7961
Gear shift mechanism	All	73	10	P-10893
INTERNAL PARTS				
4 speed English design	4/S	70	10	P-8286
4 speed German design	4/S	70	11	P-8349

COPYRIGHT © 1975 — FORD MOTOR COMPANY — DEARBORN, MICHIGAN

INDEX

1972

P (MAVERICK)

TITLE	TRANS.	SECTION	PAGE	ILLUS. NO.
EXTERNAL PARTS				
Clutch & clutch pedal	3/S	75	14	P-8822
Shift mechanism				
Steering column - column shift (locking)	3/S	72	14	P-7748
Gear shift mechanism - floor mounted	3/S	73	7	P-6794
INTERNAL PARTS				
3 speed manual trans. - 3.03 type	3/S	70	12	P-9882

U (BRONCO)

EXTERNAL PARTS				
Clutch & clutch pedal	3/S	75	6	P-4972
Shift mechanism				
Steering column - manual steering	3/S	72	16	P-10771
- power steering	3/S	72	17	P-10773
Transfer case shift linkage		72	6	P-5202
INTERNAL PARTS				
3 speed manual trans. & extension - 3.03 type	3/S	70	12	P-9882
Transfer case (7E028) parts		70	9	P-5149

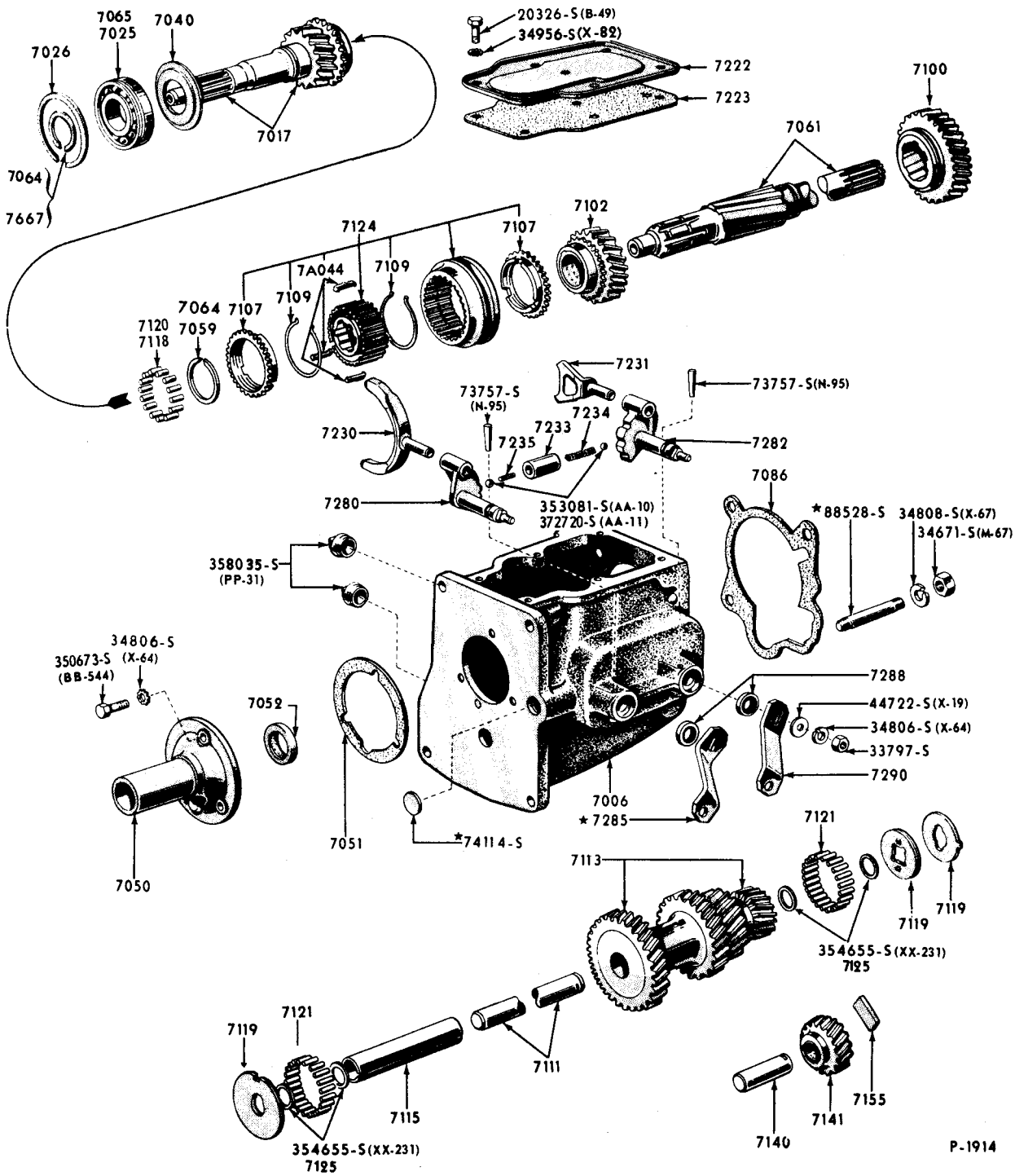

3 SPEED OVERDRIVE TRANSMISSION - LESS EXTENSION-TYPICAL

1965/67 FORD, FAIRLANE

COPYRIGHT © 1975 — FORD MOTOR COMPANY — DEARBORN, MICHIGAN

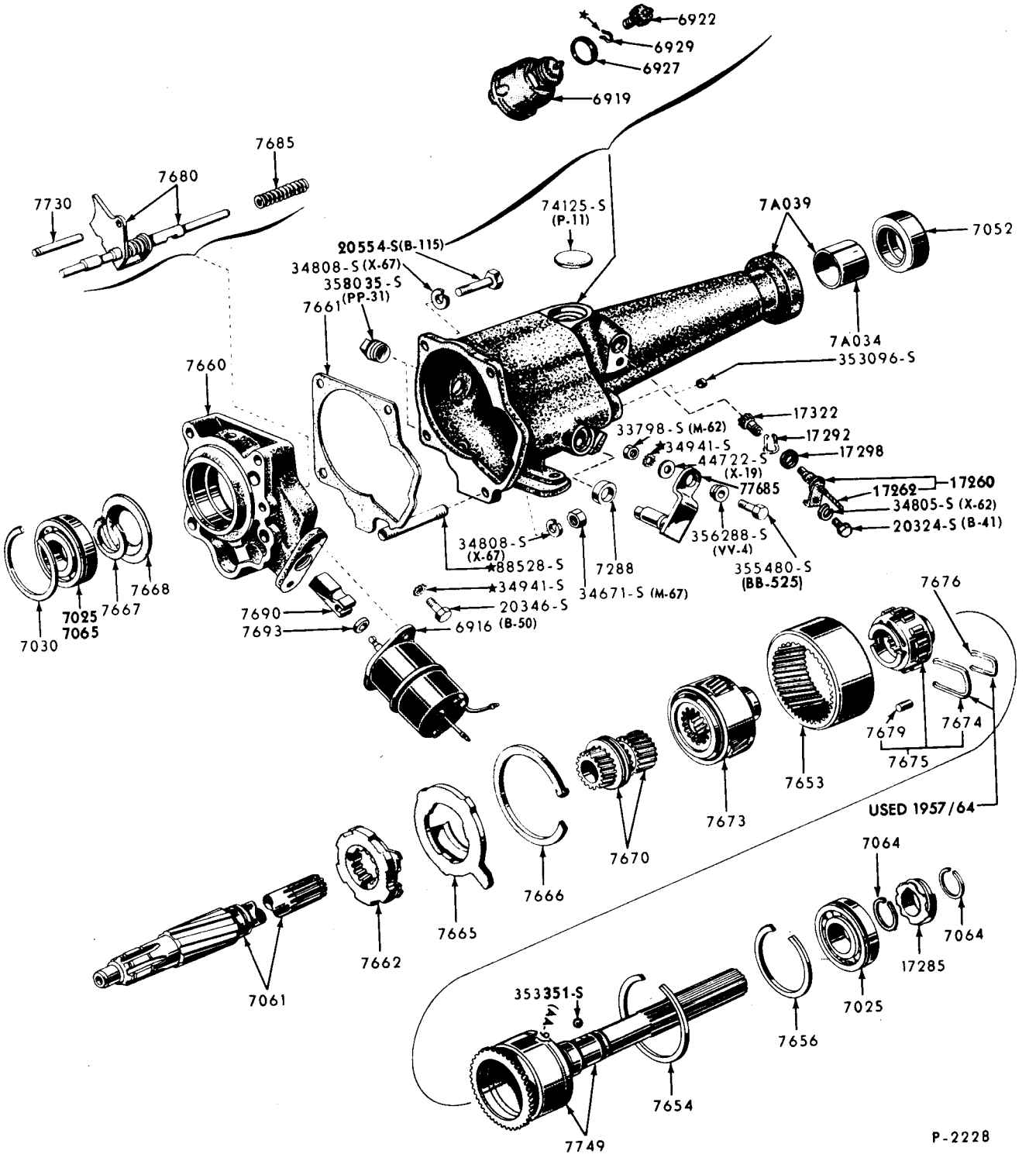

3 SPEED OVERDRIVE TRANSMISSION EXTENSION - TYPICAL
1965/67 FAIRLANE & 1965/67 FORD - 6 & 8 CYL. 240, 289

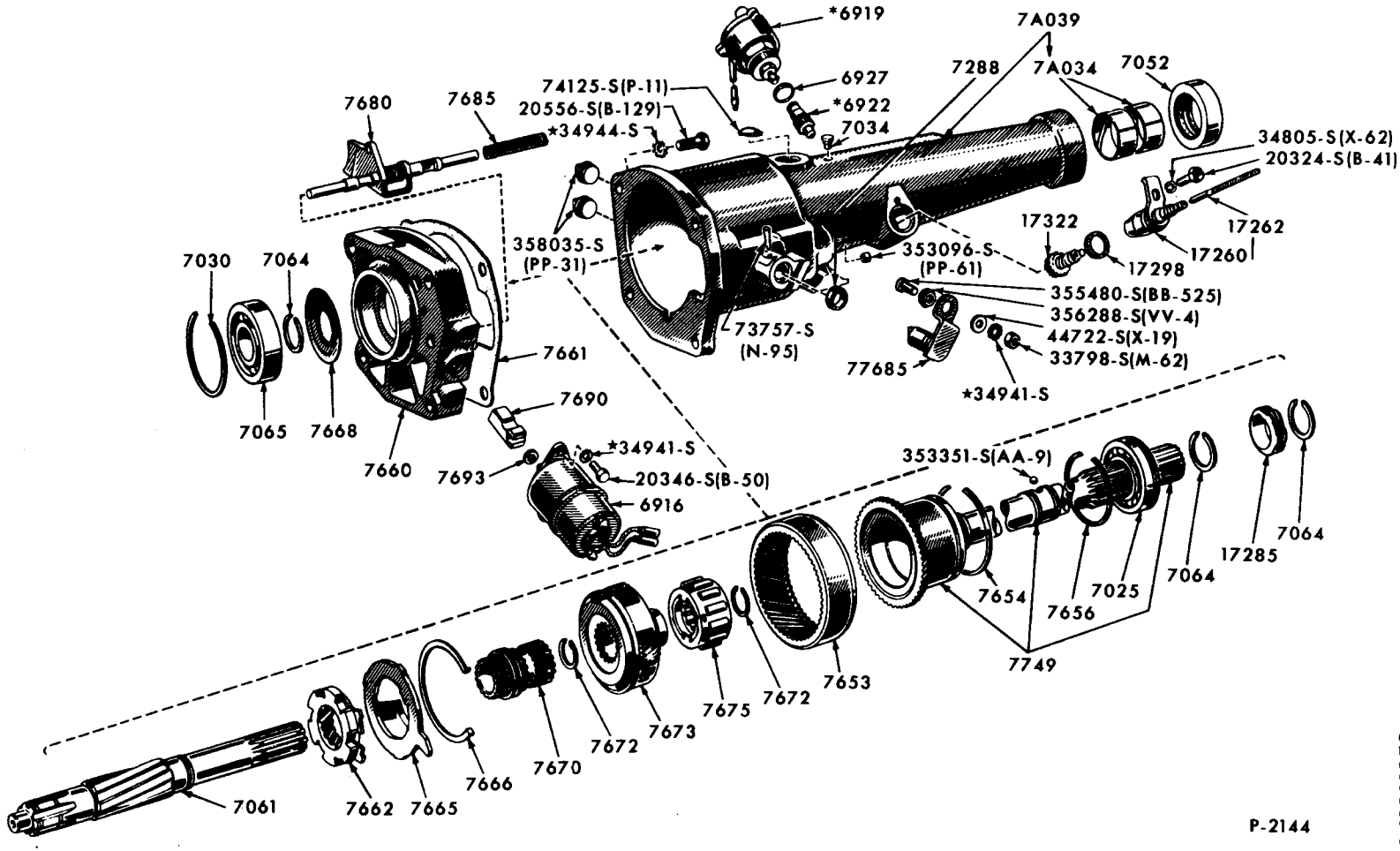

3 SPEED OVERDRIVE TRANSMISSION EXTENSION - TYPICAL

1965/67 FORD - 8 CYL. 390

COPYRIGHT © 1975 — FORD MOTOR COMPANY — DEARBORN, MICHIGAN

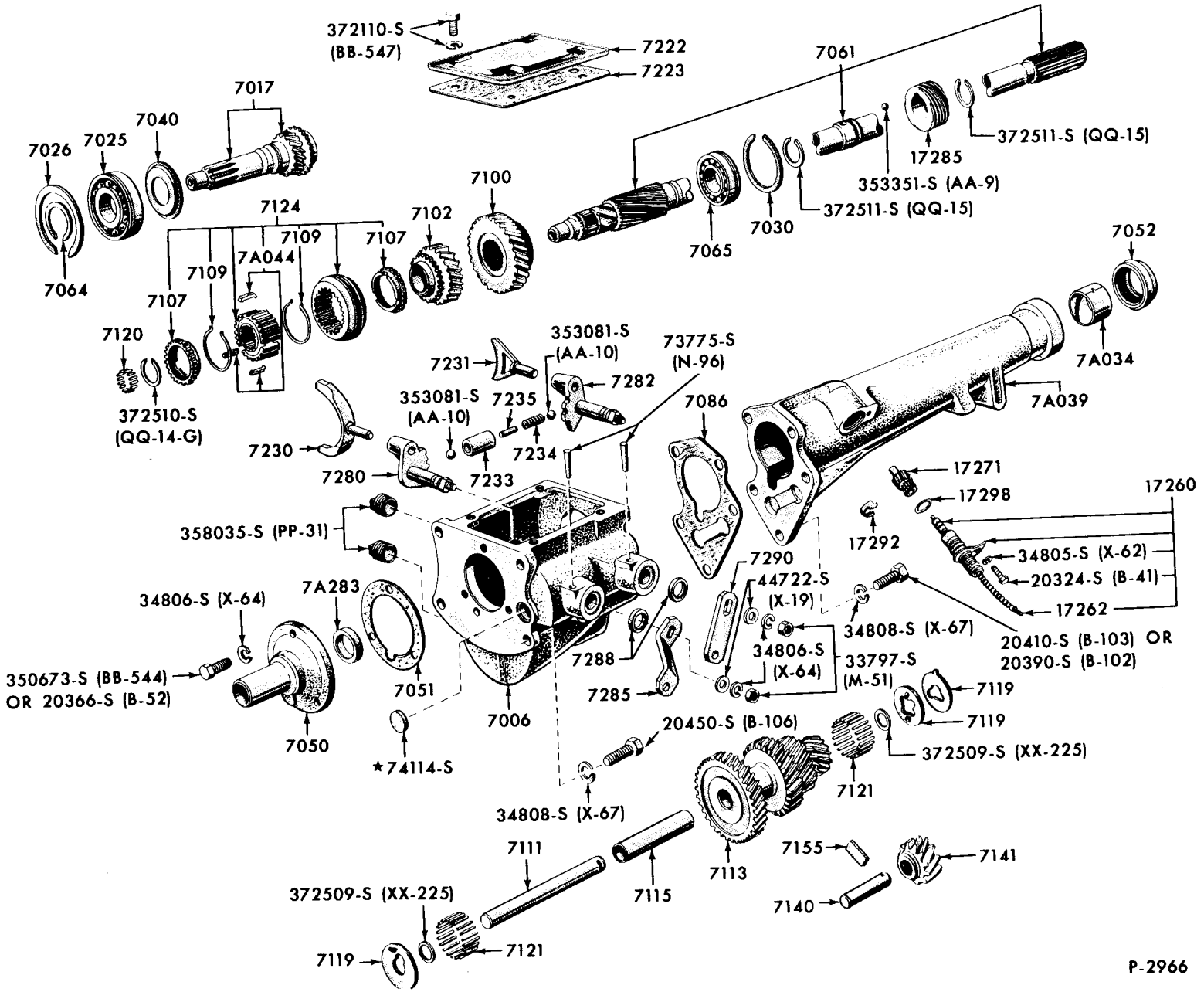
372110-S (BB-547)
7222
7223
7061
7017
7040
7026
7025
372511-S (QQ-15)
17285
353351-S (AA-9)
372511-S (QQ-15)
7100
7124
7102
7109
7107
7065
7030
7052
7064
7109
7A044
7107
7120
353081-S (AA-10)
73775-S (N-96)
7231
7282
7A034
7A039
353081-S (AA-10)
7235
7086
372510-S (QQ-14-G)
7230
7234
7280
7233
17271
17298
17260
358035-S (PP-31)
17292
34805-S (X-62)
7290
20324-S (B-41)
44722-S (X-19)
34806-S (X-64)
7A283
17262
34808-S (X-67)
20410-S (B-103) OR 20390-S (B-102)
34806-S (X-64)
33797-S (M-51)
350673-S (BB-544) OR 20366-S (B-52)
7051
7288
7119
7285
7006
7119
20450-S (B-106)
7050
372509-S (XX-225)
★74114-S
7121
34808-S (X-67)
7111
7155
7141
7113
7115
372509-S (XX-225)
7140
7119
7121
P-2966

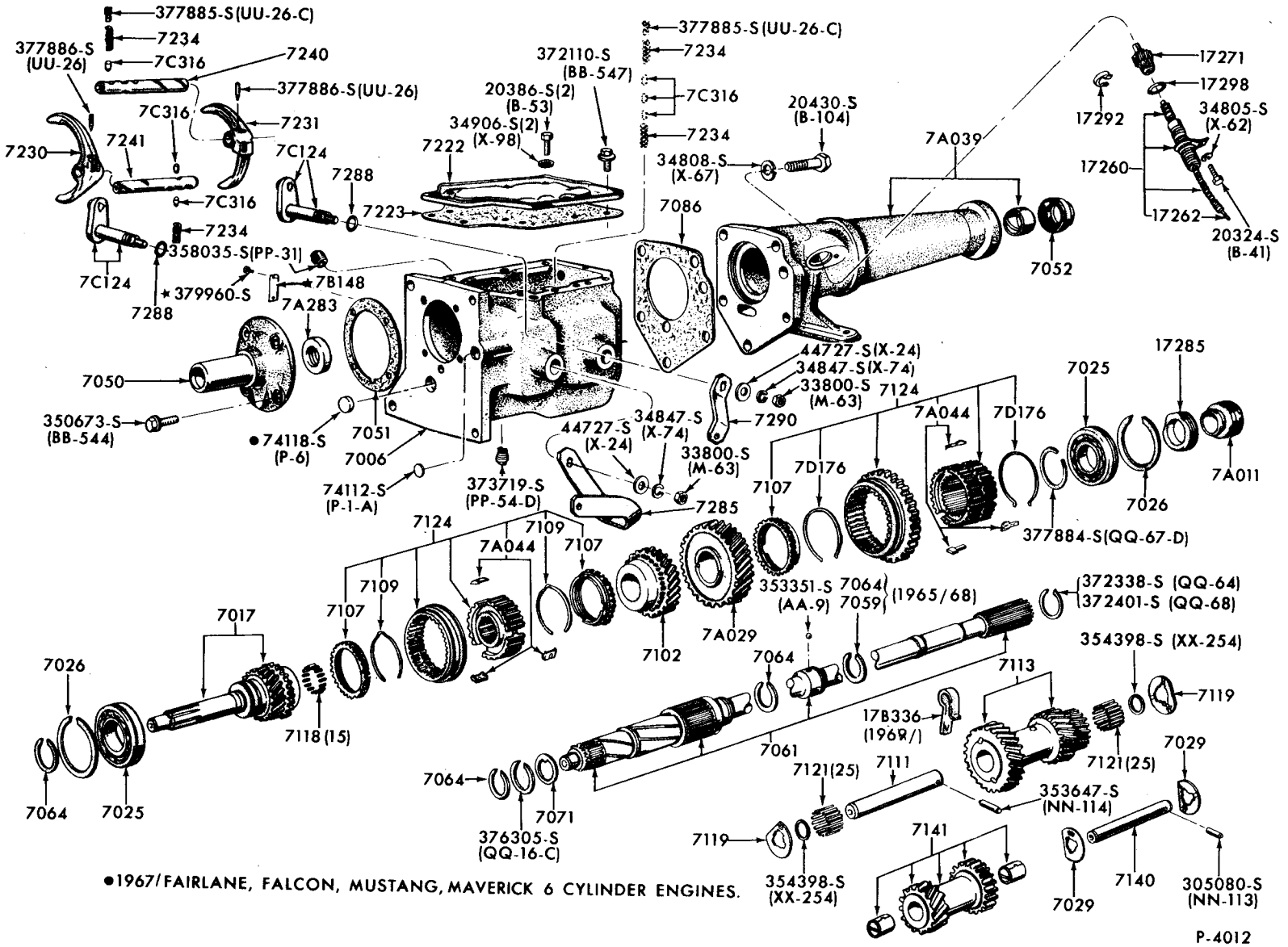

●1967/FAIRLANE, FALCON, MUSTANG, MAVERICK 6 CYLINDER ENGINES.

3 SPEED MANUAL TRANSMISSION - 3.03 TYPE - TYPICAL
1965/71 FORD, FAIRLANE/TORINO, MUSTANG, 1966/71 BRONCO, 1970/71 MAVERICK

COPYRIGHT © 1975 — FORD MOTOR COMPANY — DEARBORN, MICHIGAN

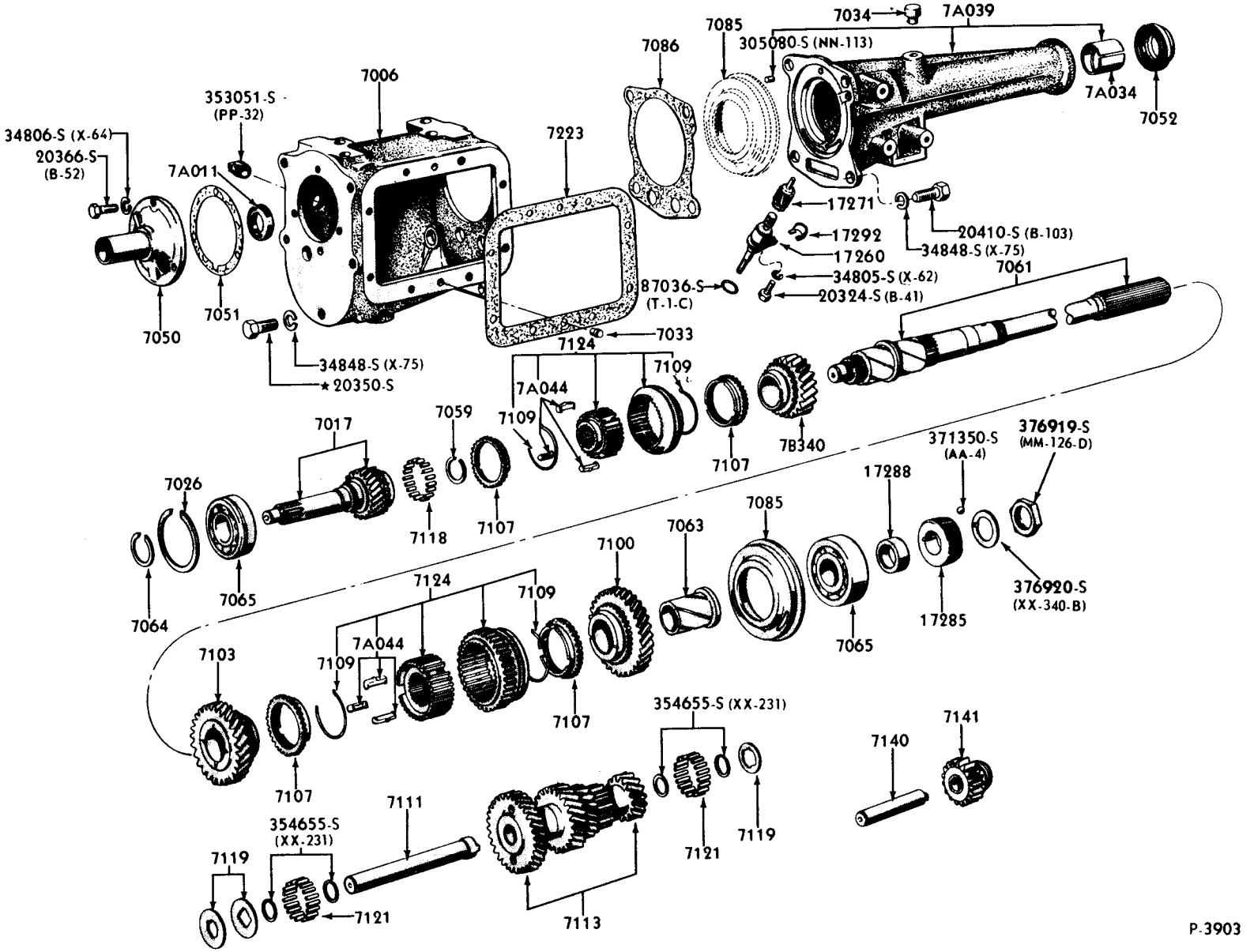

4 SPEED MANUAL TRANSMISSION - DAGENHAM DESIGN
1965/66 MUSTANG

COPYRIGHT © 1975 — FORD MOTOR COMPANY — DEARBORN, MICHIGAN

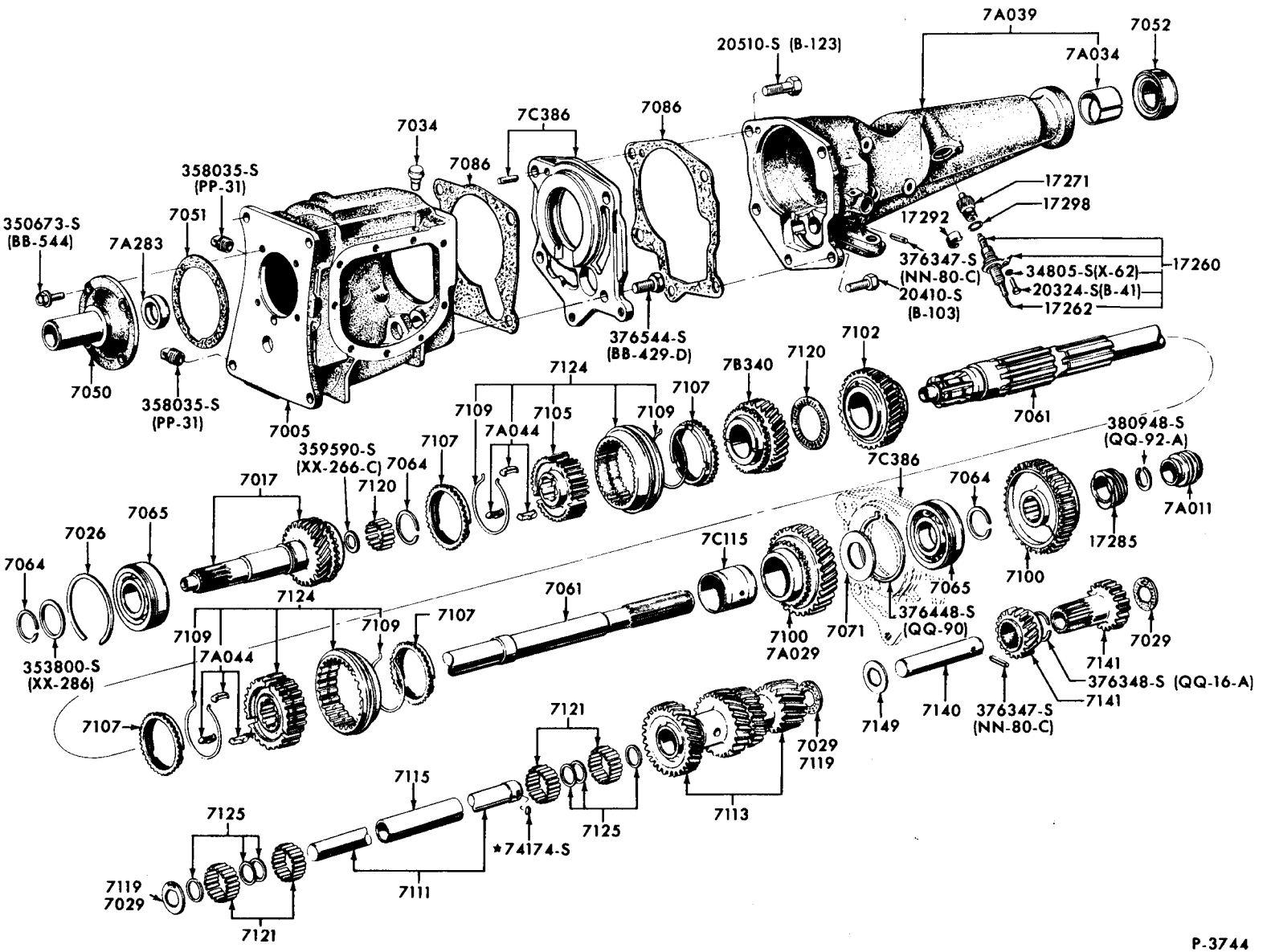

4 SPEED MANUAL TRANSMISSION - WARNER GEAR DESIGN
1965/66 FAIRLANE, MUSTANG, FALCON

COPYRIGHT © 1975 — FORD MOTOR COMPANY — DEARBORN, MICHIGAN

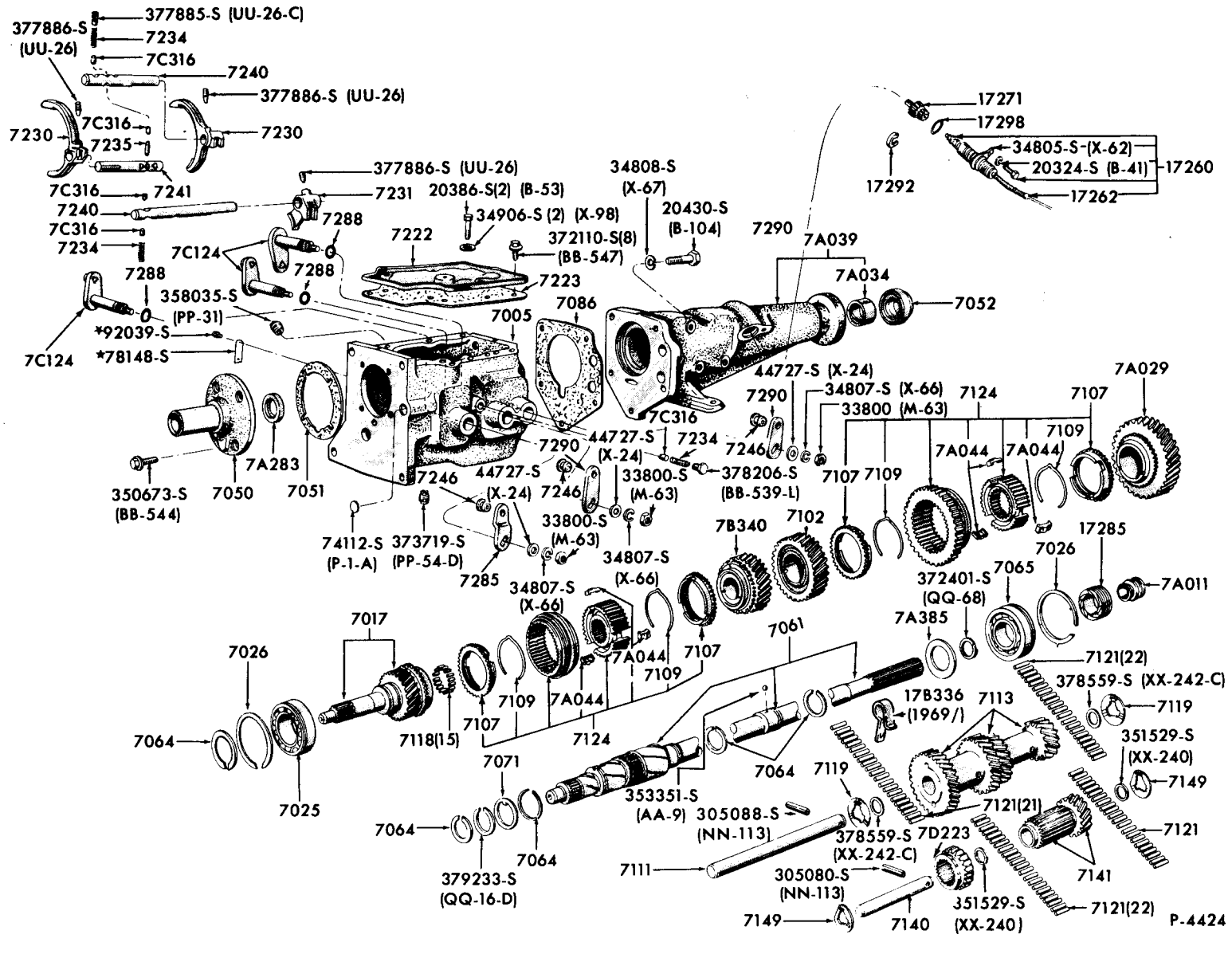
377885-S (UU-26-C)
377886-S (UU-26)
7234
7C316
7240
377886-S (UU-26)
7230
7C316
7235
7230
7C316
7241
7240
7C316
7234
7288
7C124
7288
7288
358035-S (PP-31)
*92039-S
*78148-S
7C124
350673-S (BB-544)
7050
7A283
7051
74112-S (P-1-A)
373719-S (PP-54-D)
7246
7285
377886-S (UU-26)
7231
20386-S(2) (B-53)
34906-S (2) (X-98)
7222
372110-S(8) (BB-547)
7223
7086
7005
34808-S (X-67)
20430-S (B-104)
7290
7A039
7A034
7052
17271
17298
17292
34805-S (X-62)
20324-S (B-41)
17260
17262
44727-S (X-24)
7290
34807-S (X-66)
33800 (M-63)
7124
7107
7A029
7109
7A044
7A044
7246
7234
7C316
7290
44727-S (X-24)
44727-S (X-24)
7246
33800-S (M-63)
378206-S (BB-539-L)
7107
7109
33800-S (M-63)
34807-S (X-66)
7B340
7102
17285
7026
7065
372401-S (QQ-68)
7A011
7A385
7121(22)
378559-S (XX-242-C)
7119
351529-S (XX-240)
7149
7121(21)
7121
7141
7121(22)
7017
7026
7064
7025
7118(15)
7107
7109
7A044
7124
7109
7A044
7107
7061
17B336 (1969/)
7113
7064
7119
353351-S (AA-9)
305088-S (NN-113)
378559-S (XX-242-C)
7D223
7111
305080-S (NN-113)
7149
7140
351529-S (XX-240)
7071
7064
7064
379233-S (QQ-16-D)
P-4424

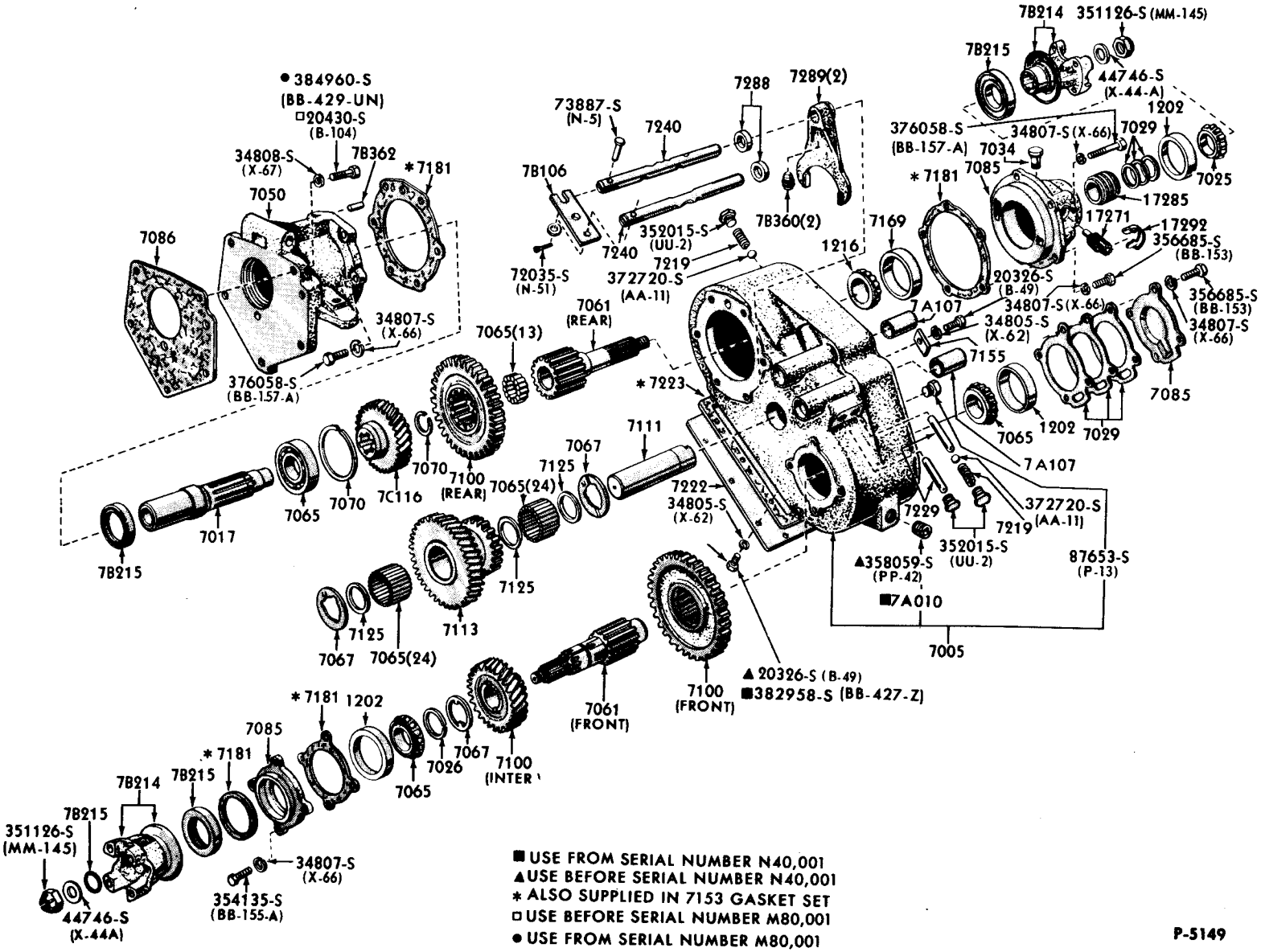

■ USE FROM SERIAL NUMBER N40,001
▲ USE BEFORE SERIAL NUMBER N40,001
* ALSO SUPPLIED IN 7153 GASKET SET
□ USE BEFORE SERIAL NUMBER M80,001
● USE FROM SERIAL NUMBER M80,001

P-5149

TRANSFER CASE (7E028) & RELATED PARTS
1966/72 BRONCO

COPYRIGHT © 1975 — FORD MOTOR COMPANY — DEARBORN, MICHIGAN

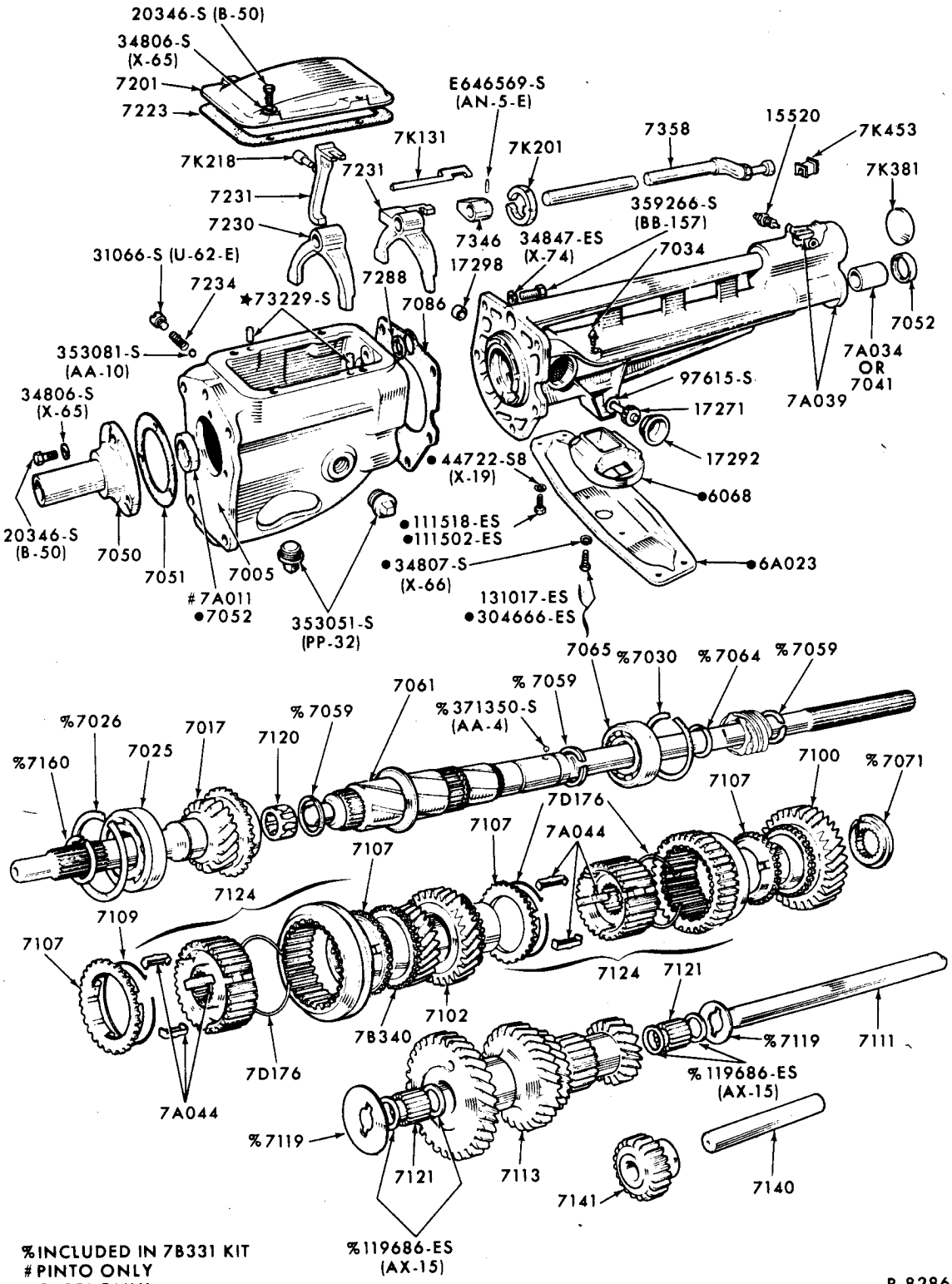

%INCLUDED IN 7B331 KIT
PINTO ONLY
• CAPRI ONLY

P-8286

4 SPEED MANUAL TRANSMISSION - ENGLISH DESIGN
1971/72 PINTO

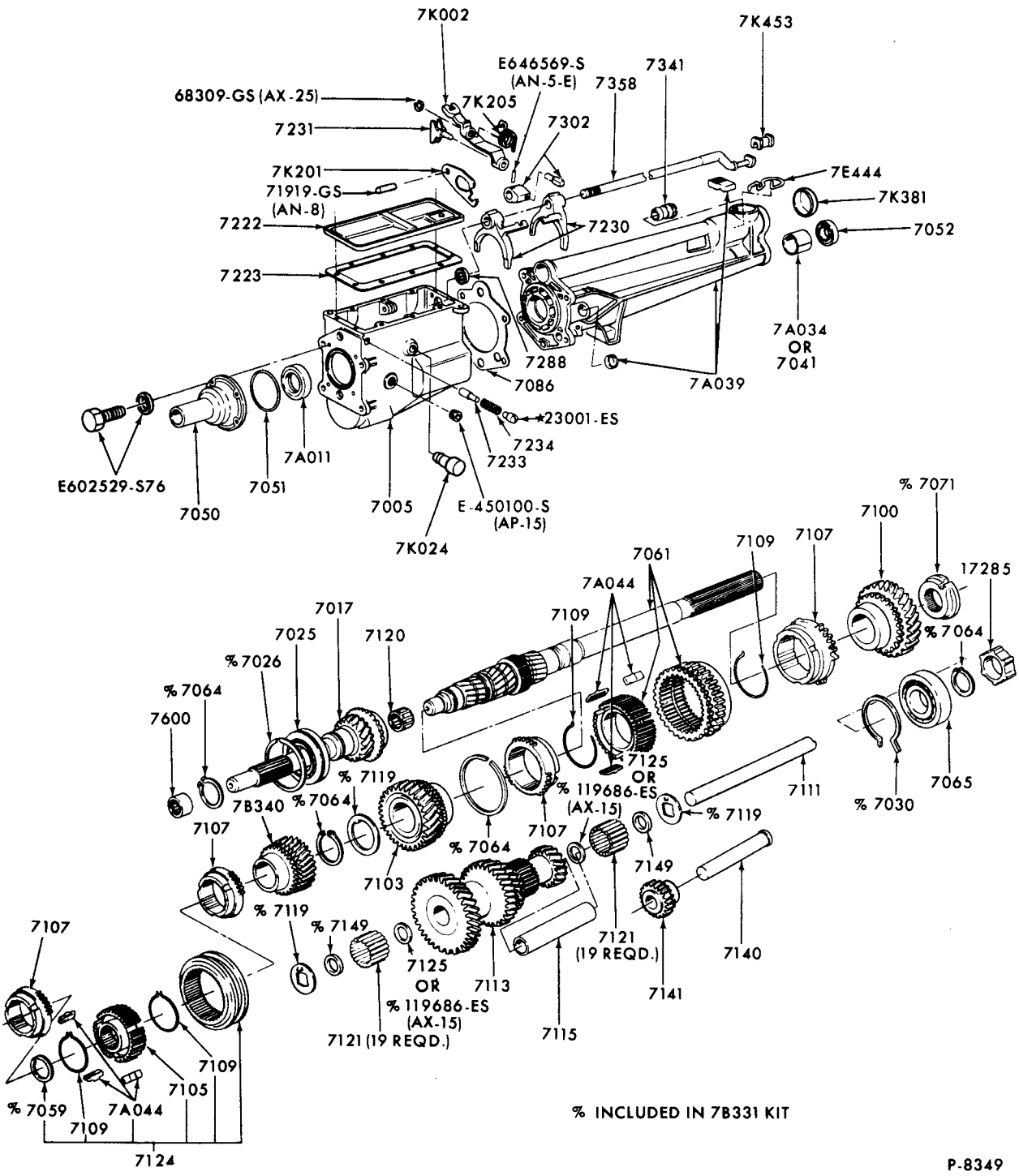

4 SPEED MANUAL TRANSMISSION - INTERIOR and EXTERIOR - GERMAN DESIGN
1971/72 PINTO

COPYRIGHT © 1975 — FORD MOTOR COMPANY — DEARBORN, MICHIGAN

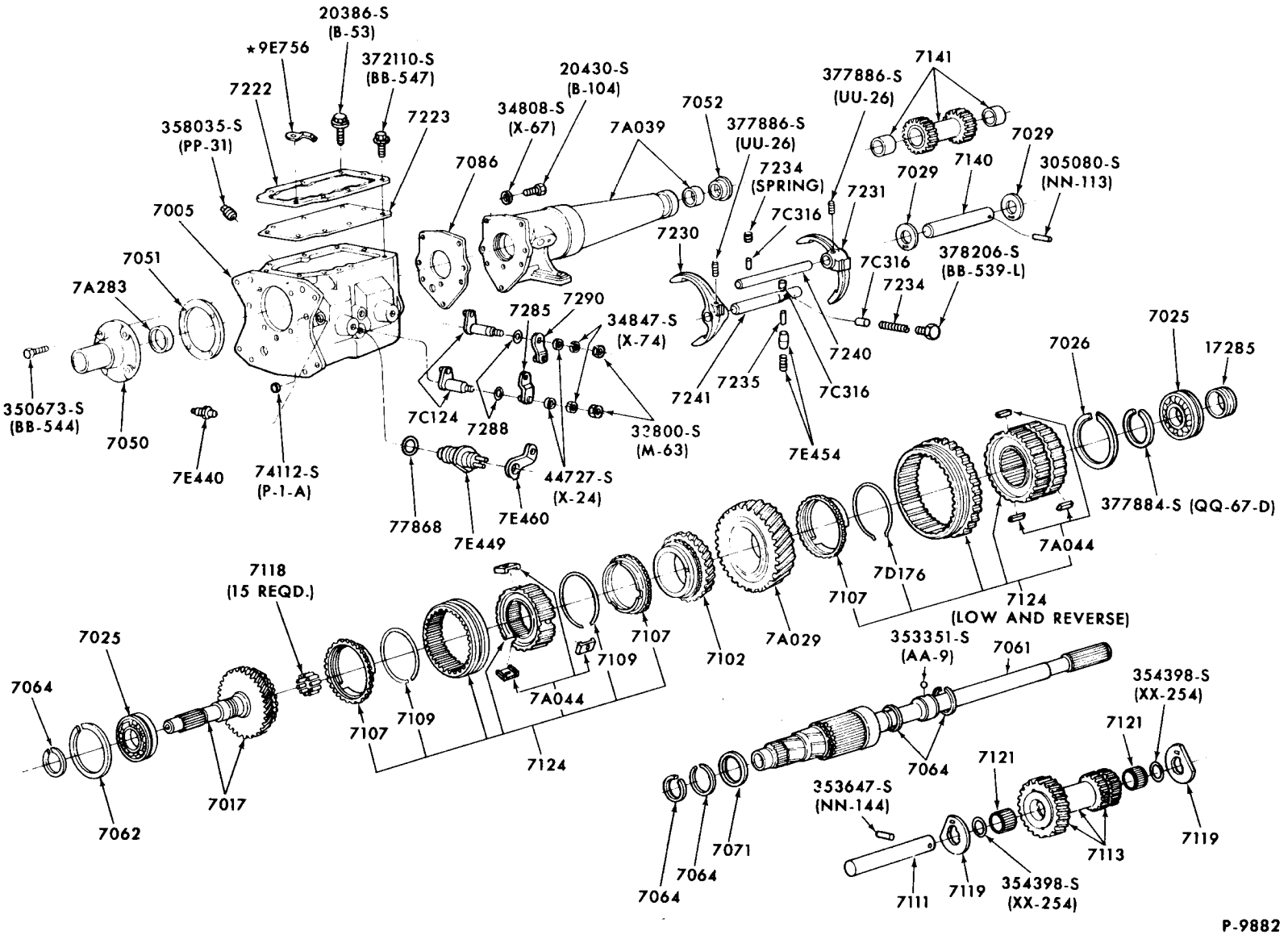
20386-S (B-53)
*9E756
372110-S (BB-547)
7222
7223
358035-S (PP-31)
7005
7051
7A283
350673-S (BB-544)
7050
7E440
74112-S (P-1-A)
7086
34808-S (X-67)
20430-S (B-104)
7A039
7052
377886-S (UU-26)
7234 (SPRING)
7230
7C316
7231
7141
377886-S (UU-26)
7029
7140
305080-S (NN-113)
378206-S (BB-539-L)
7234
7240
7241
7235
7C316
7E454
7285
7290
34847-S (X-74)
7C124
7288
32800-S (M-63)
44727-S (X-24)
7E460
7E449
77868
7025
17285
7026
377884-S (QQ-67-D)
7A044
7D176
7107
7124 (LOW AND REVERSE)
7A029
7102
7107
7109
7A044
7124
7118 (15 REQD.)
7107
7109
7017
7025
7064
7062
353351-S (AA-9)
7061
354398-S (XX-254)
7121
7064
353647-S (NN-144)
7071
7064
7064
7111
7119
354398-S (XX-254)
7113
7119
P-9882

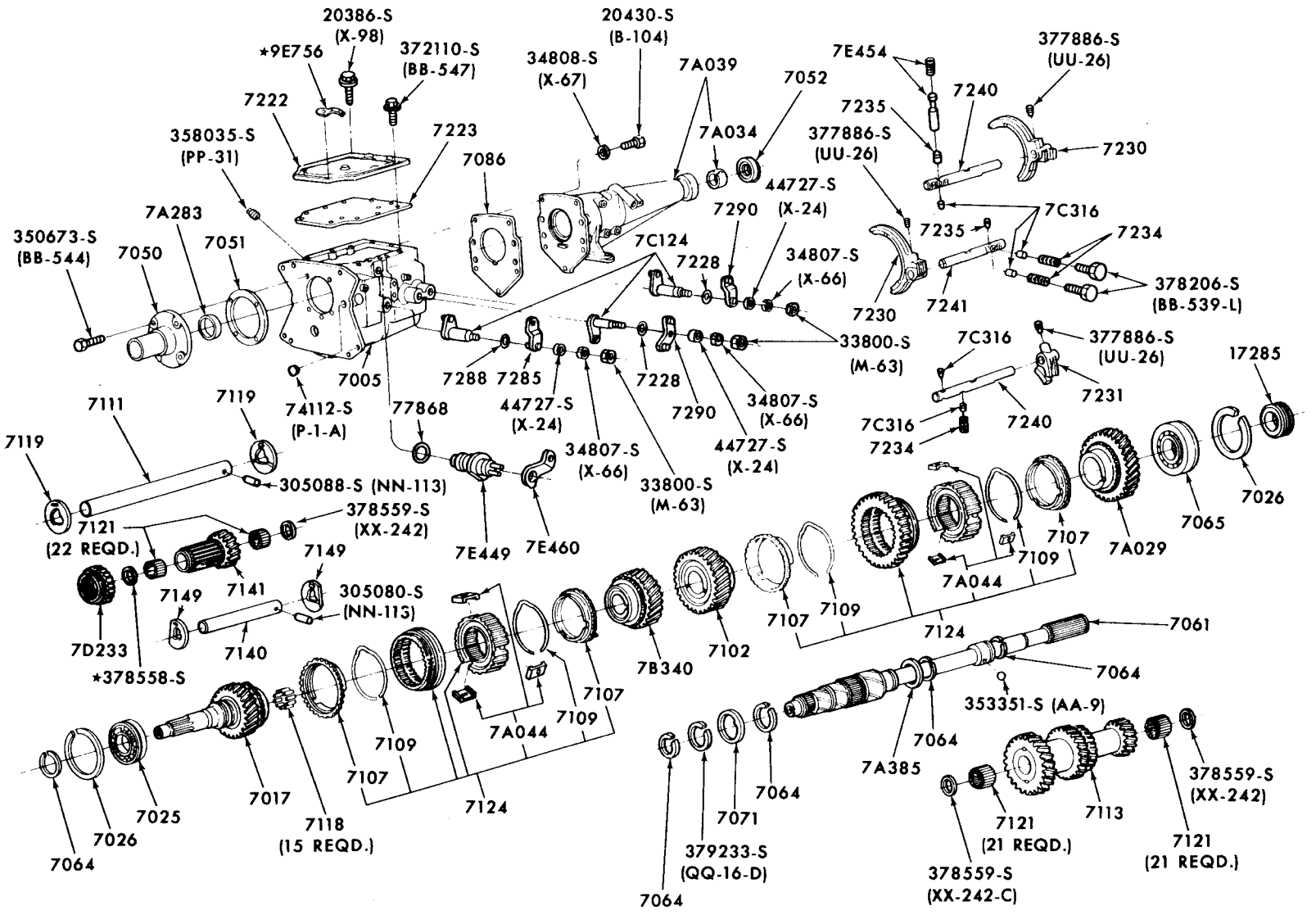

COPYRIGHT © 1975 — FORD MOTOR COMPANY — DEARBORN, MICHIGAN

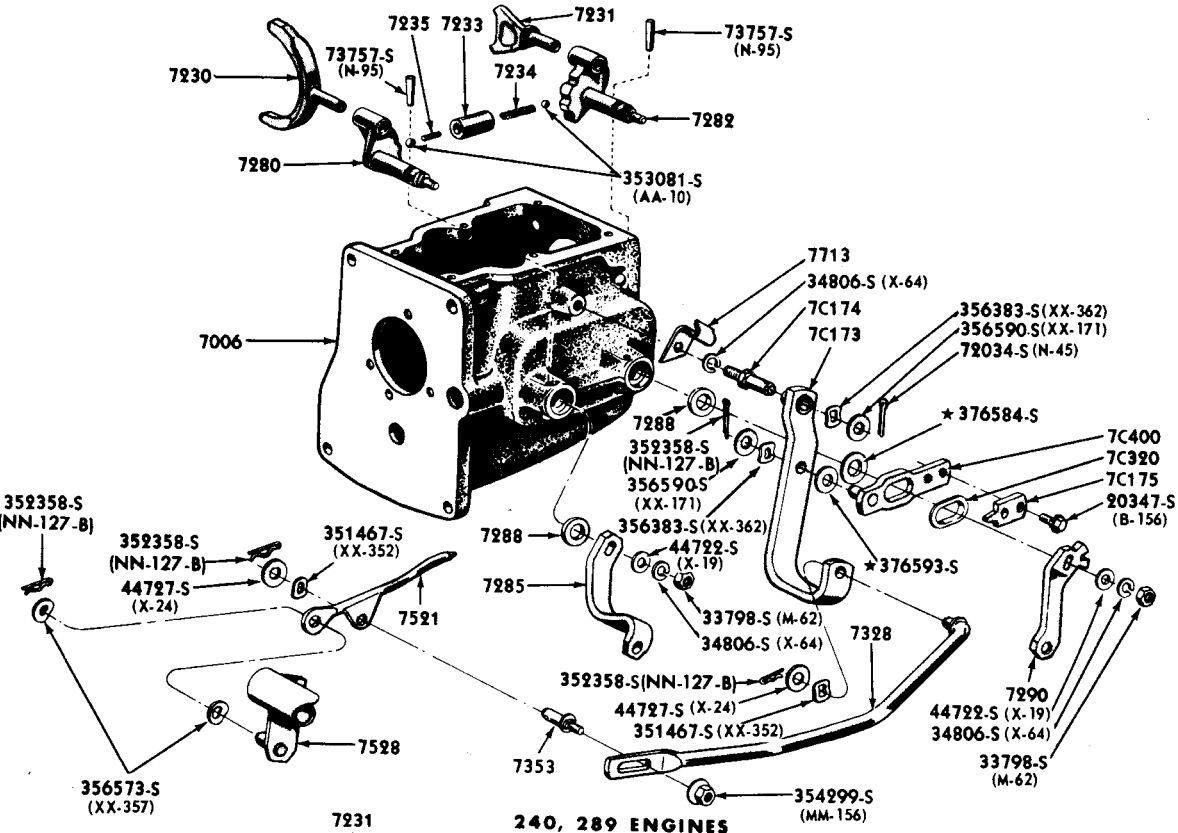

240, 289 ENGINES

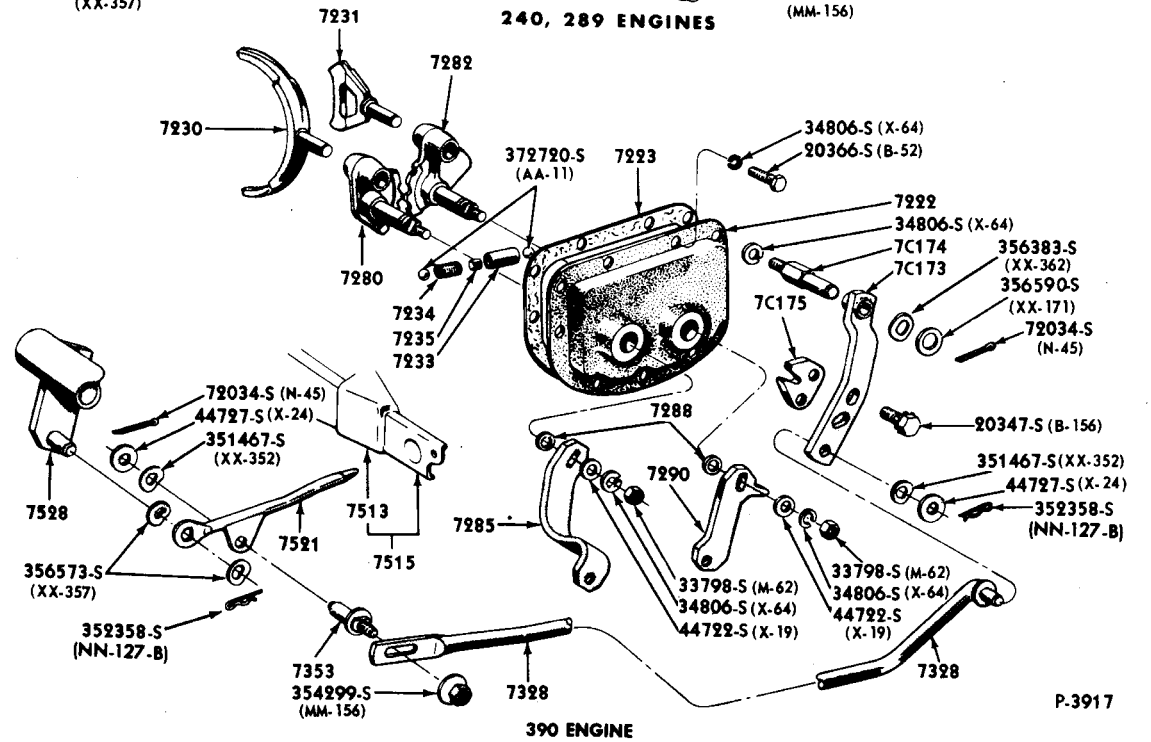

390 ENGINE

GEAR SHIFT & INTERLOCK LINKAGE - TYPICAL
OVERDRIVE TRANSMISSION
1965/67 FORD - 6 & 8 CYL.

COPYRIGHT © 1975 — FORD MOTOR COMPANY — DEARBORN, MICHIGAN

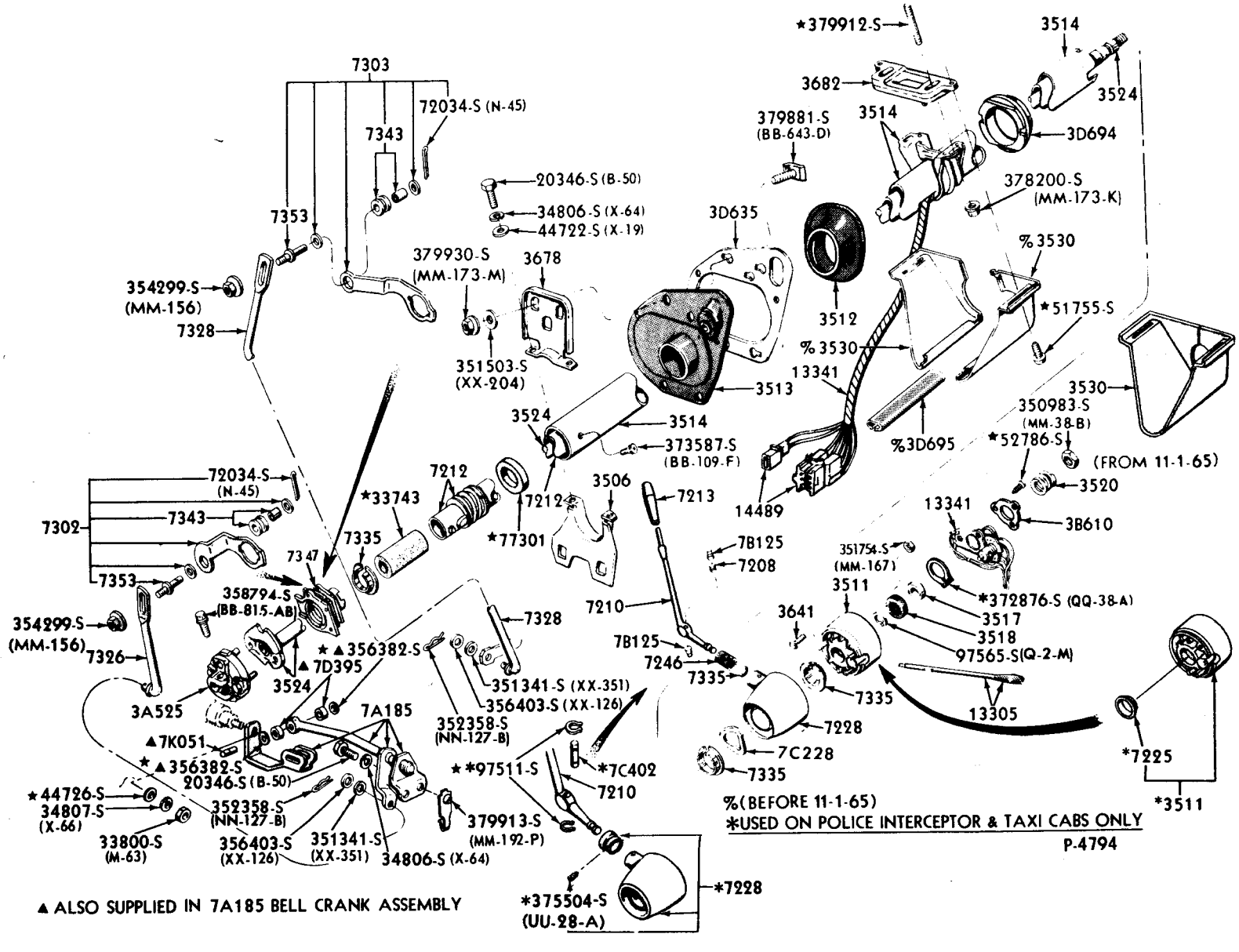

%(BEFORE 11-1-65)
*USED ON POLICE INTERCEPTOR & TAXI CABS ONLY
P-4794

▲ ALSO SUPPLIED IN 7A185 BELL CRANK ASSEMBLY

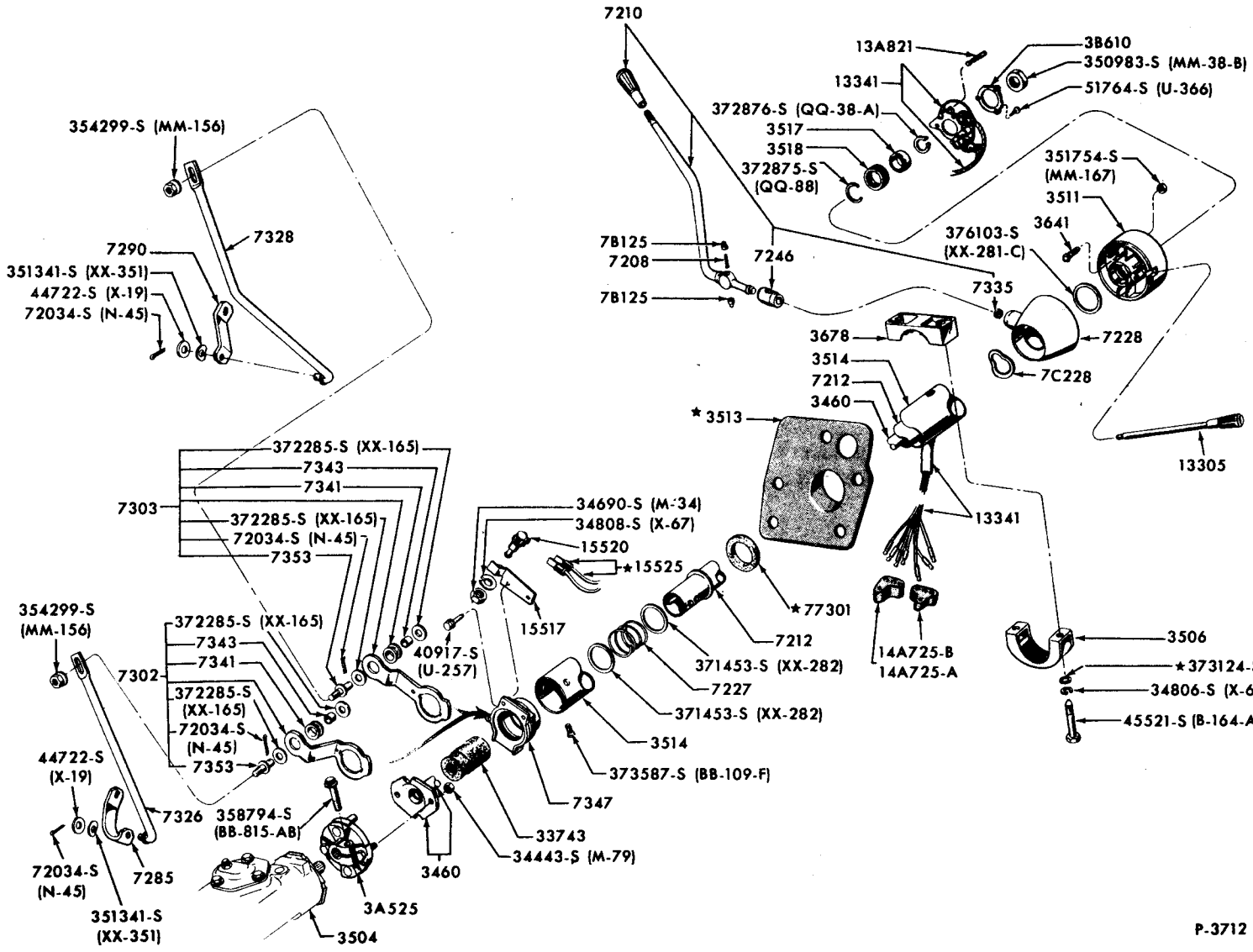

STEERING COLUMN & SHIFT MECHANISM
3 SPEED MANUAL & OVERDRIVE TRANSMISSIONS
1965 FAIRLANE

COPYRIGHT © 1975 — FORD MOTOR COMPANY — DEARBORN, MICHIGAN

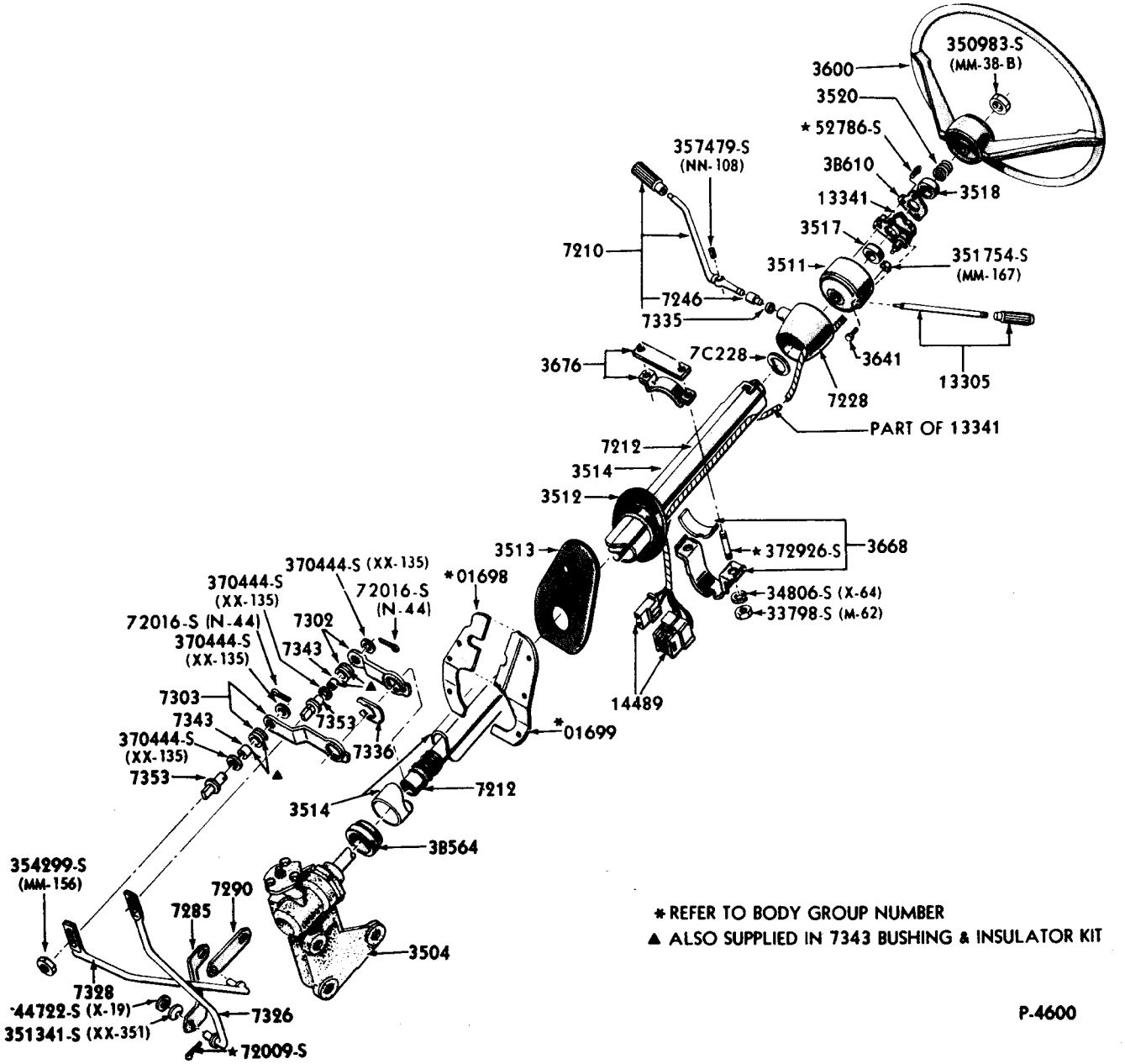

* REFER TO BODY GROUP NUMBER

▲ ALSO SUPPLIED IN 7343 BUSHING & INSULATOR KIT

P-4600

STEERING COLUMN & SHIFT MECHANISM
3 SPEED MANUAL & OVERDRIVE TRANSMISSIONS
1966/67 FAIRLANE & FALCON

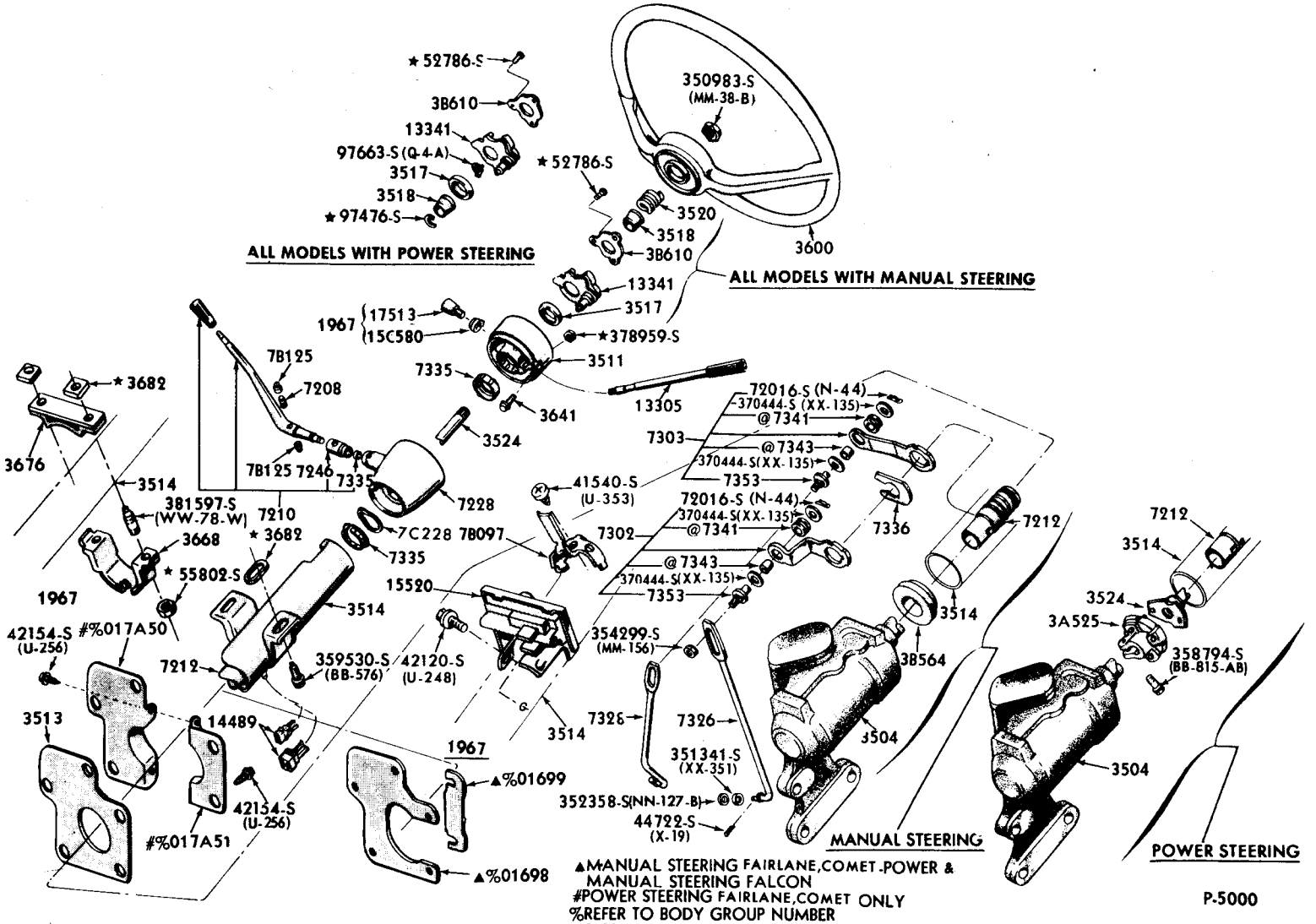

▲MANUAL STEERING FAIRLANE,COMET-POWER & MANUAL STEERING FALCON
#POWER STEERING FAIRLANE,COMET ONLY
%REFER TO BODY GROUP NUMBER
@ SUPPLIED ALSO IN 7343 KIT

COPYRIGHT © 1975 — FORD MOTOR COMPANY — DEARBORN, MICHIGAN

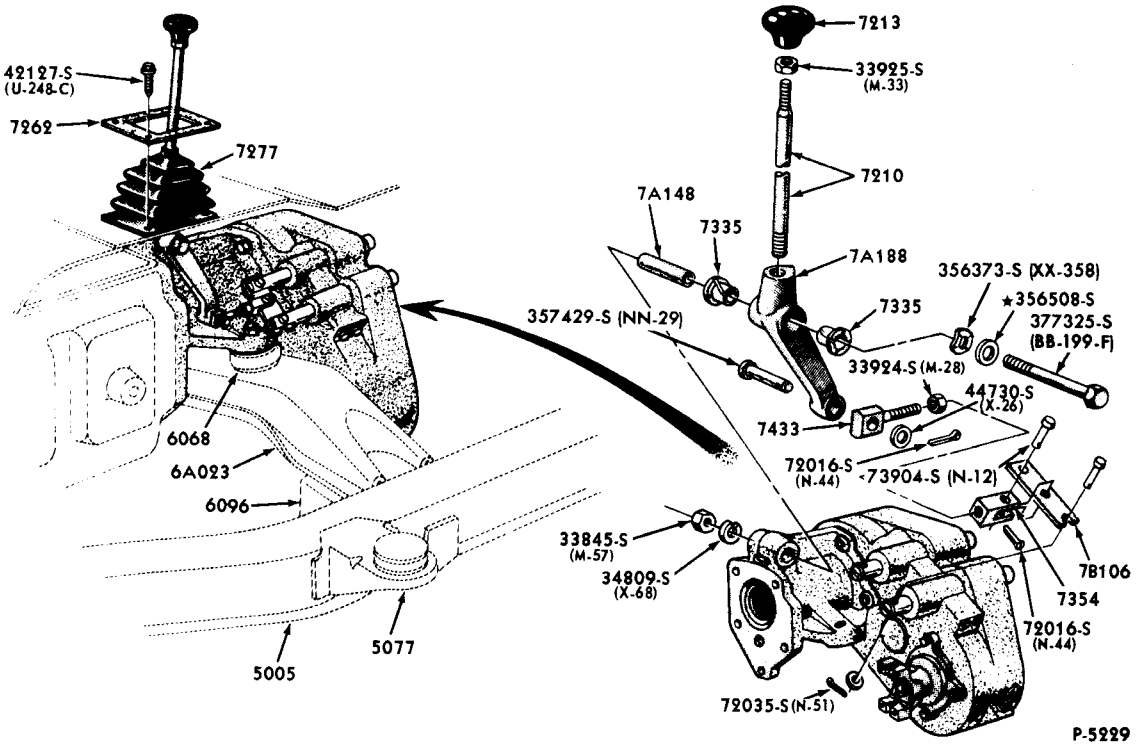

TRANSFER CASE SHIFT LINKAGE
1966 BRONCO - BEFORE SER. 830001

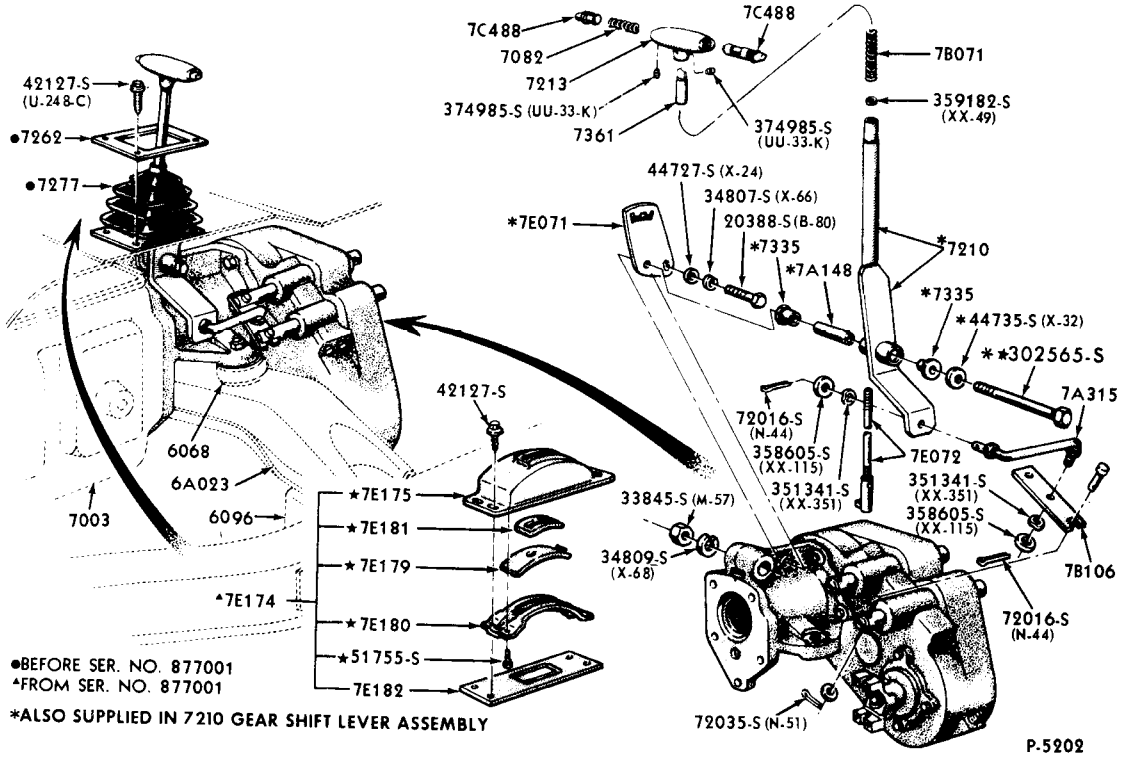

TRANSFER CASE SHIFT LINKAGE
1966/72 BRONCO - FROM SER. 830, 001

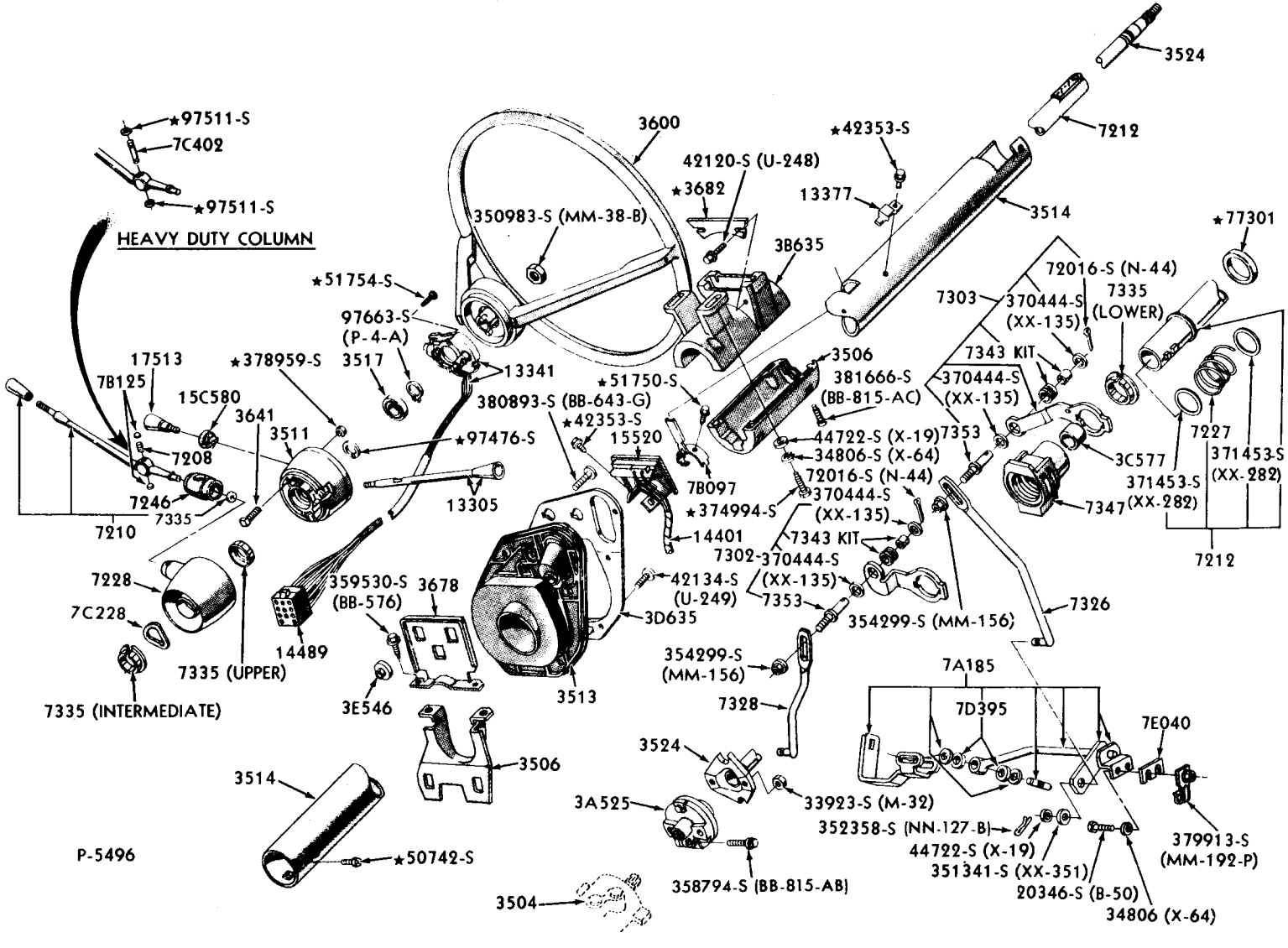

STEERING COLUMN & SHIFT MECHANISM - TYPICAL
3 SPEED MANUAL & OVERDRIVE TRANSMISSIONS
1967 FORD

COPYRIGHT © 1975 — FORD MOTOR COMPANY — DEARBORN, MICHIGAN

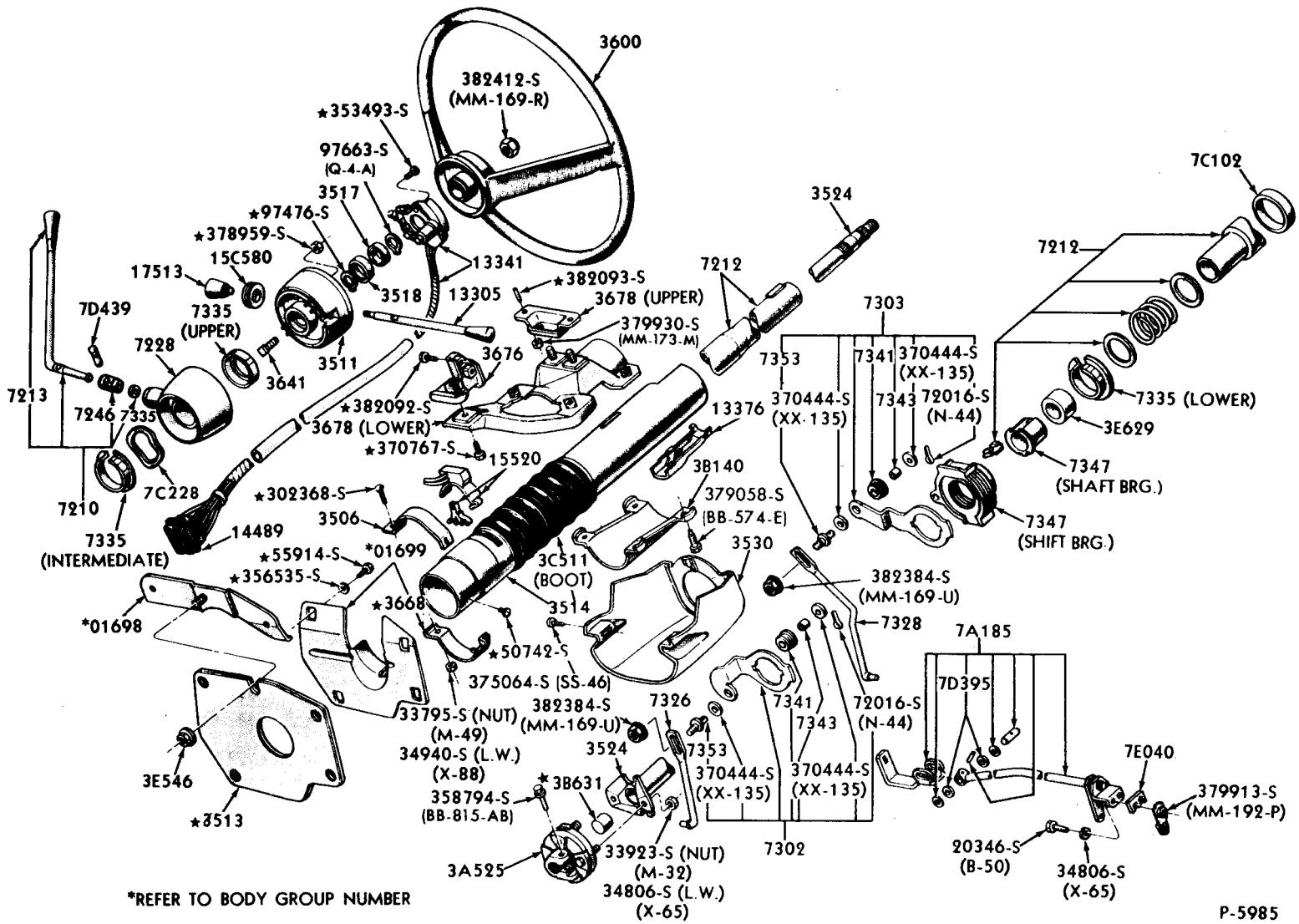
3600
382412-S (MM-169-R)
★353493-S
97663-S (Q-4-A)
3517
★97476-S
★378959-S
15C580
17513
7335 (UPPER)
7D439
7228
3641
3511
3518
13341
13305
★382093-S
3678 (UPPER)
379930-S (MM-173-M)
3676
★382092-S
3678 (LOWER)
★370767-S
15520
7213
7246
7335
7210
7C228
7335 (INTERMEDIATE)
14489
★302368-S
3506
★55914-S
*01699
★356535-S
*01698
★3668
3C511 (BOOT)
3514
★50742-S
375064-S (SS-46)
33795-S (NUT) (M-49)
382384-S (MM-169-U)
34940-S (L.W.) (X-88)
3E546
★3513
358794-S (BB-815-AB)
★3B631
3524
7326
7353
3A525
33923-S (NUT) (M-32)
34806-S (L.W.) (X-65)
3524
7212
7303
7353
7341
370444-S (XX-135)
370444-S (XX-135)
7343
72016-S (N-44)
13376
3B140
379058-S (BB-574-E)
3530
382384-S (MM-169-U)
7328
7A185
7D395
7341
7343
72016-S (N-44)
370444-S (XX-135)
370444-S (XX-135)
7302
7C102
7212
7335 (LOWER)
3E629
7347 (SHAFT BRG.)
7347 (SHIFT BRG.)
7E040
379913-S (MM-192-P)
20346-S (B-50)
34806-S (X-65)
*REFER TO BODY GROUP NUMBER
P-5985

STEERING COLUMN & SHIFT MECHANISM
3 SPEED MANUAL TRANSMISSION
1968/69 FAIRLANE/TORINO & 1968/70 FALCON

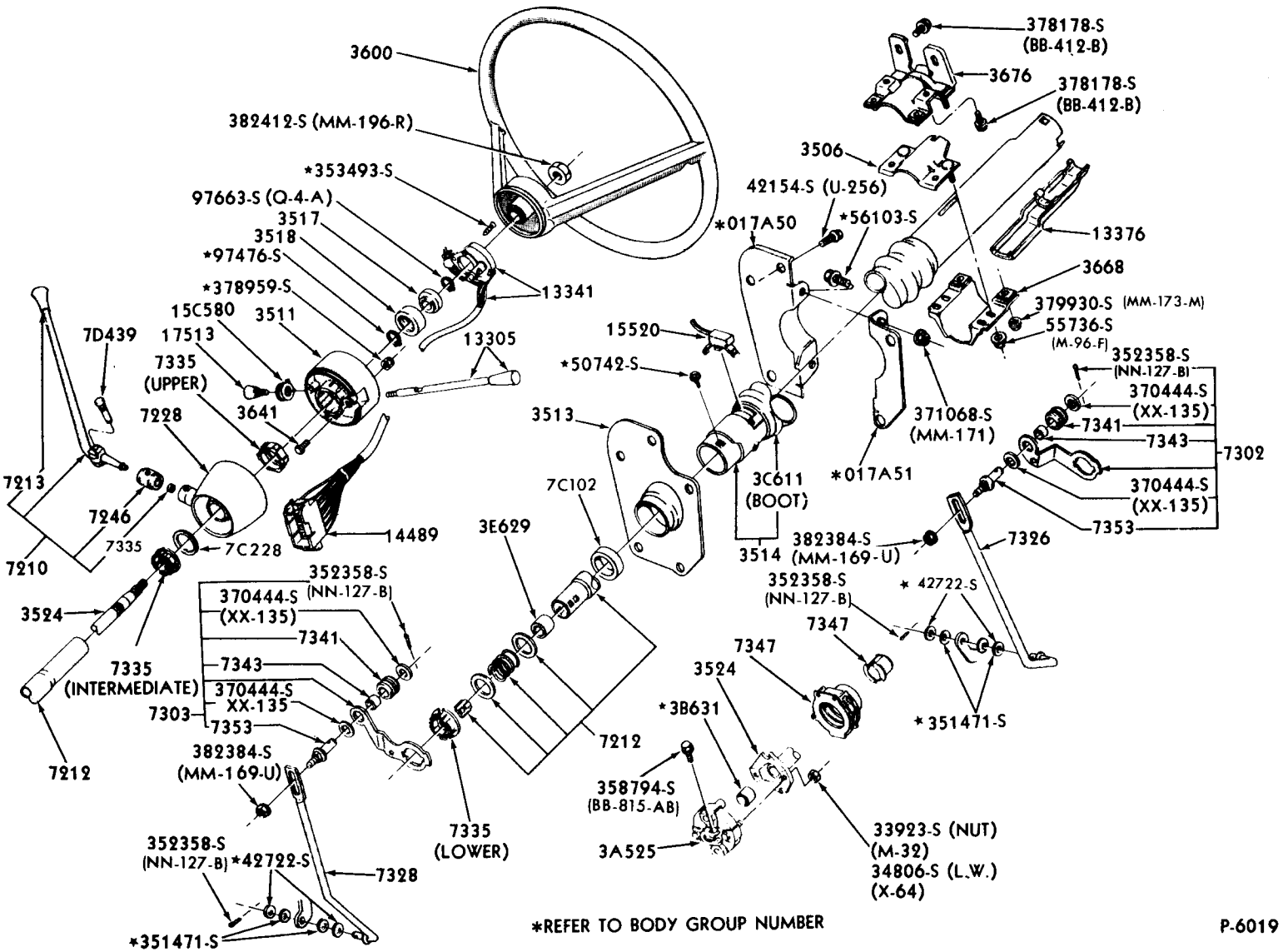

*REFER TO BODY GROUP NUMBER

P-6019

COPYRIGHT © 1975 — FORD MOTOR COMPANY — DEARBORN, MICHIGAN

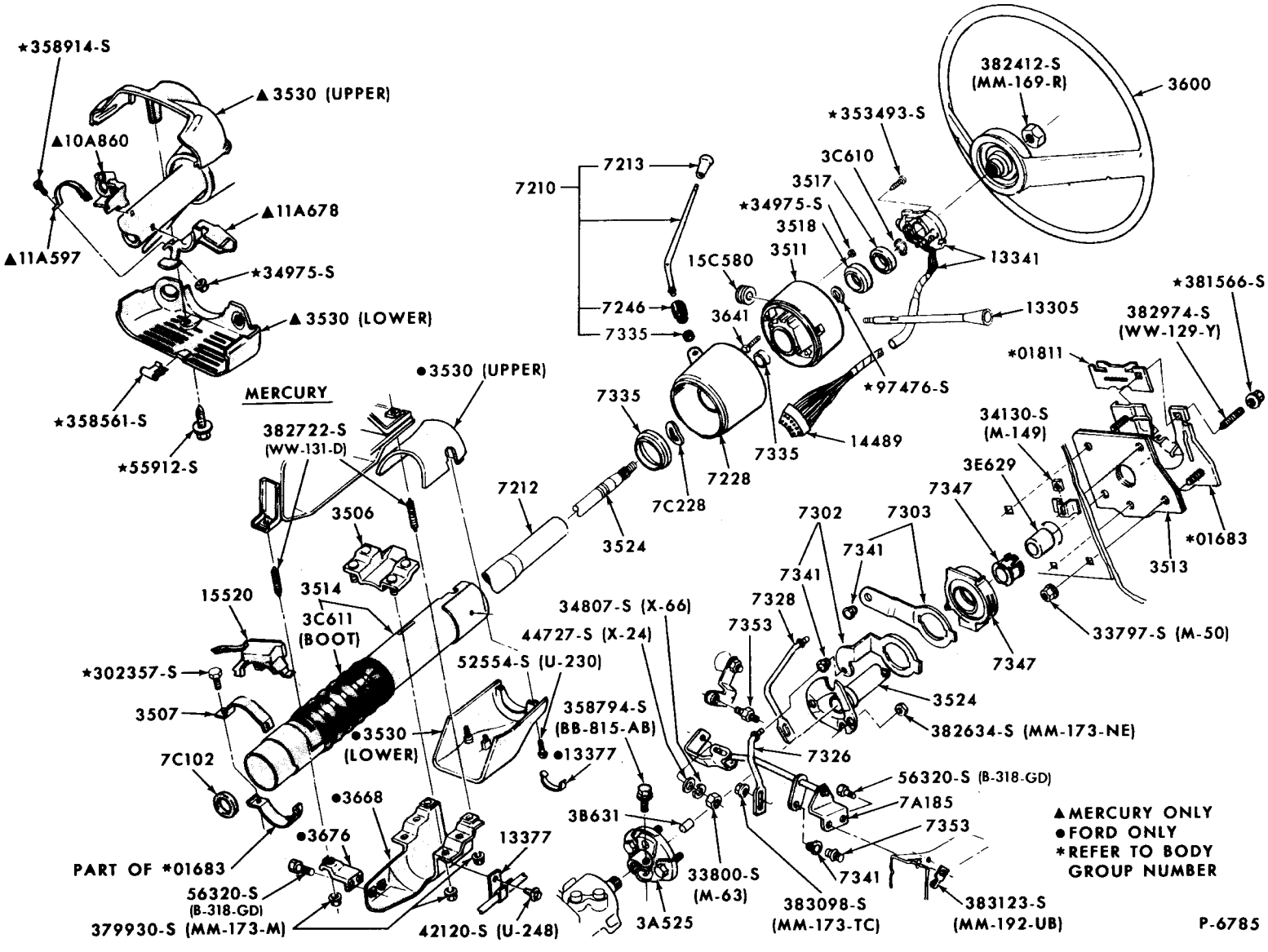
★358914-S
▲3530 (UPPER)
▲10A860
▲11A678
▲11A597
★34975-S
▲3530 (LOWER)
★358561-S
★55912-S
MERCURY
●3530 (UPPER)
382722-S
(WW-131-D)
3506
3514
15520
3C611
(BOOT)
★302357-S
3507
●3530
(LOWER)
7C102
●3668
●3676
PART OF *01683
56320-S
(B-318-GD)
379930-S (MM-173-M)
13377
42120-S (U-248)
7212
3524
7335
7C228
7228
7210
7213
7246
7335
15C580
3641
3511
3517
★34975-S
3518
3C610
★353493-S
382412-S
(MM-169-R)
3600
13341
13305
★97476-S
14489
7335
★381566-S
382974-S
(WW-129-Y)
★01811
34130-S
(M-149)
3E629
7347
★01683
3513
33797-S (M-50)
7347
7302
7303
7341
7341
7328
7353
34807-S (X-66)
44727-S (X-24)
52554-S (U-230)
358794-S
(BB-815-AB)
●13377
3B631
33800-S
(M-63)
3A525
7326
3524
382634-S (MM-173-NE)
56320-S (B-318-GD)
7A185
7353
7341
383098-S
(MM-173-TC)
383123-S
(MM-192-UB)
▲MERCURY ONLY
●FORD ONLY
*REFER TO BODY GROUP NUMBER
P-6785

STEERING COLUMN & SHIFT MECHANISM - NON LOCKING
3 SPEED MANUAL TRANSMISSION
1970 MAVERICK

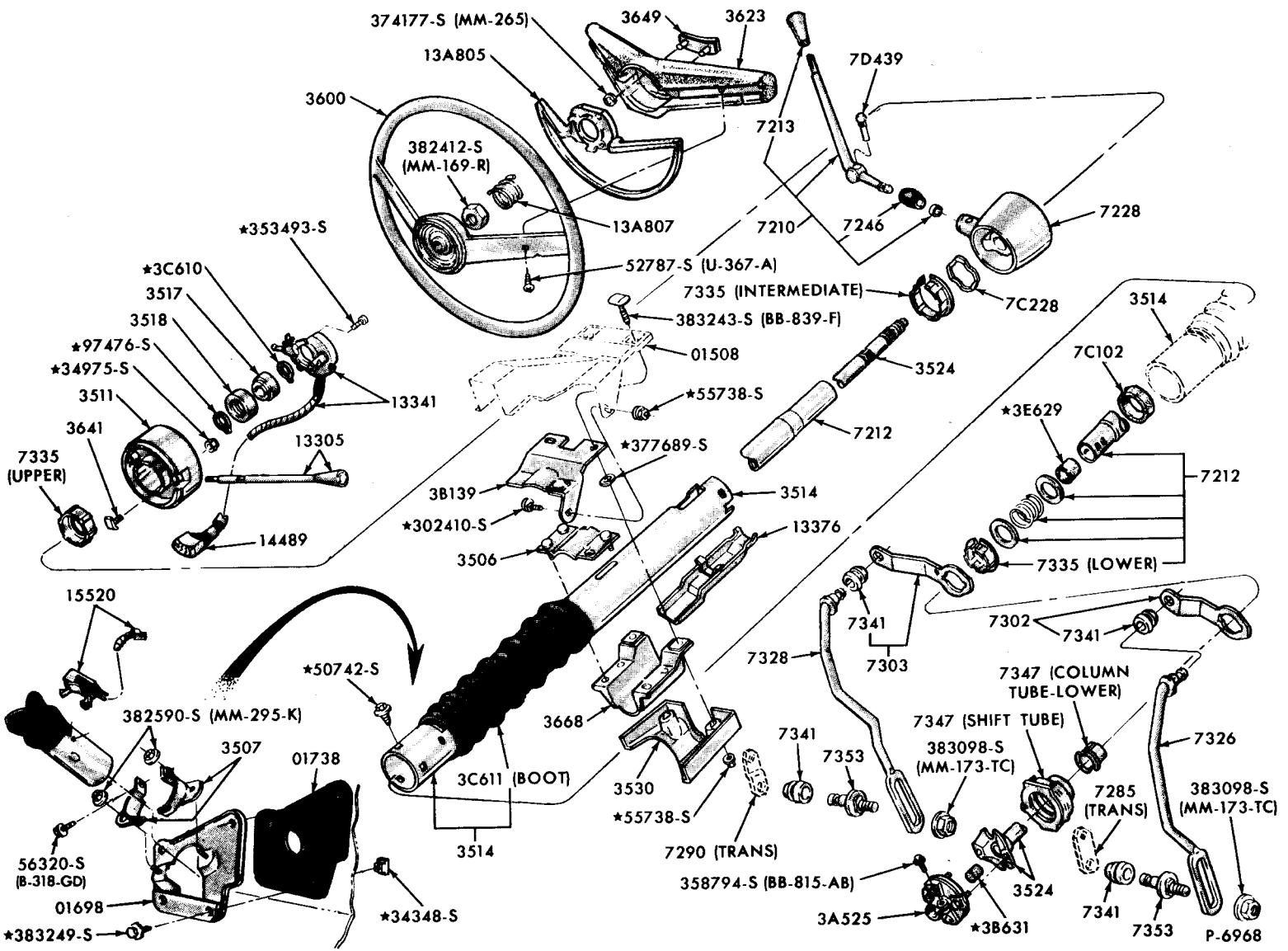

COPYRIGHT © 1975— FORD MOTOR COMPANY —DEARBORN, MICHIGAN

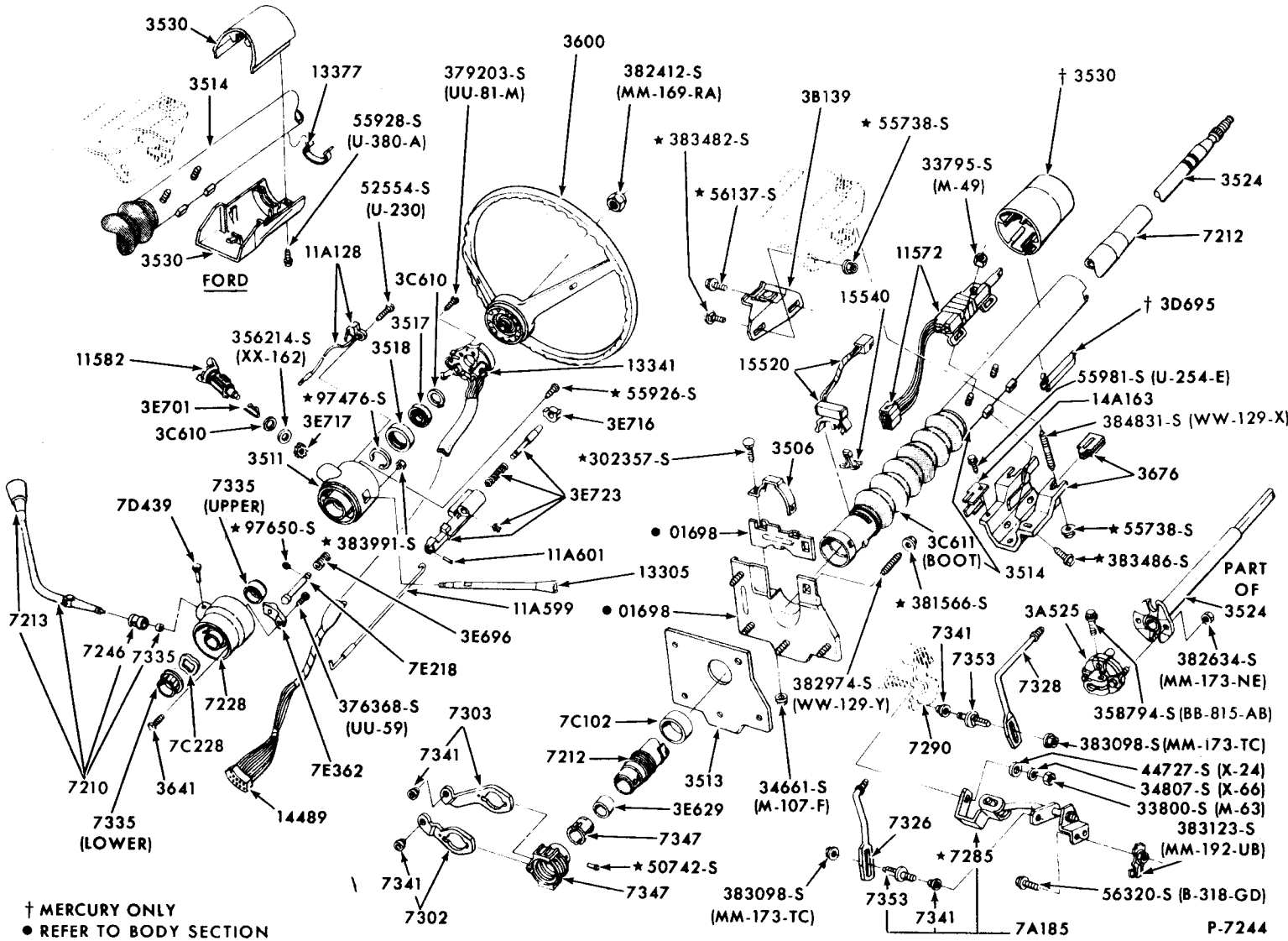

† MERCURY ONLY
● REFER TO BODY SECTION

STEERING COLUMN & SHIFT MECHANISM - LOCKING
3 SPEED MANUAL TRANSMISSION
1970/71 FAIRLANE/TORINO

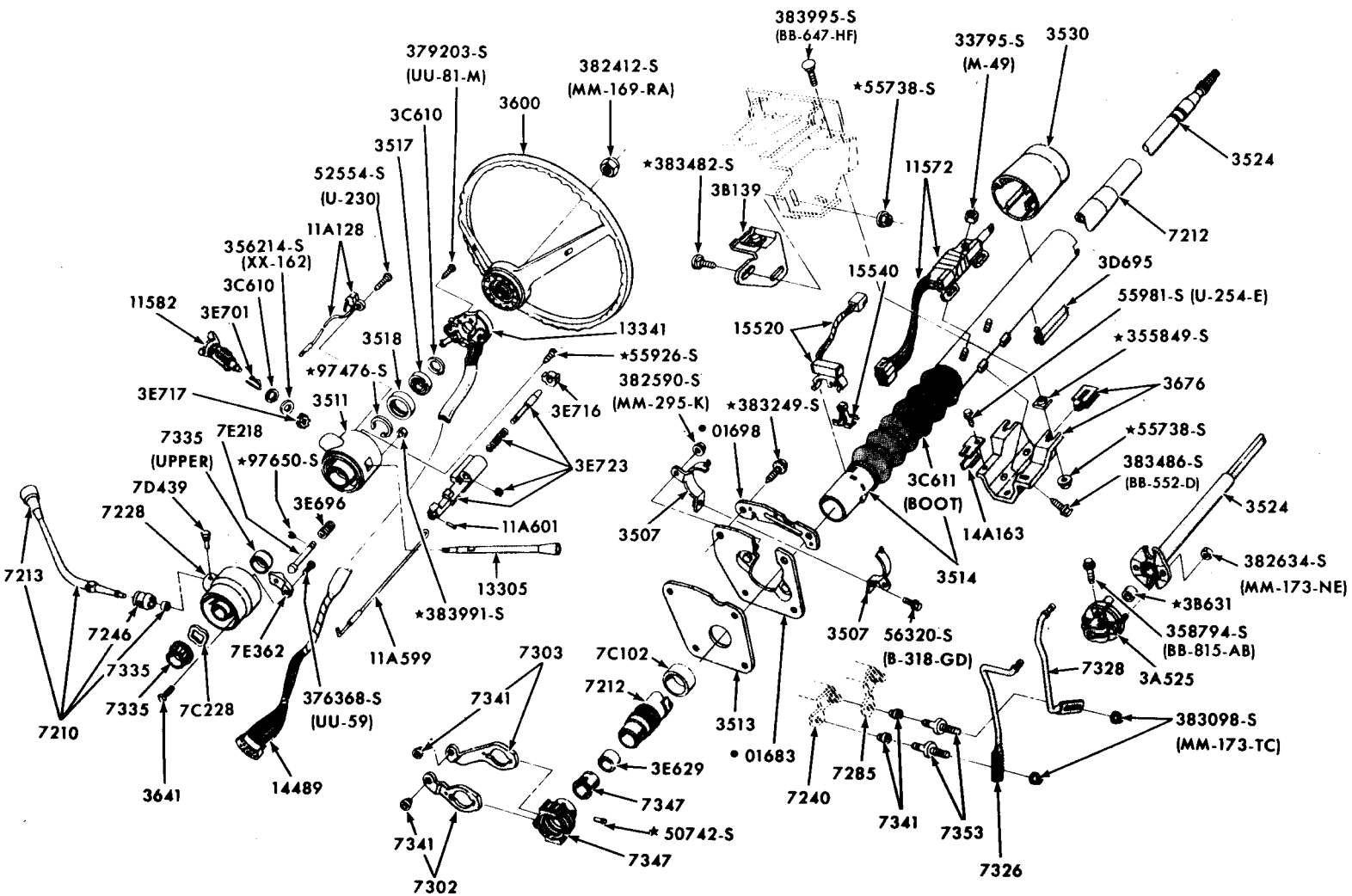

•REFER TO BODY SECTION

P-7247

COPYRIGHT © 1975 — FORD MOTOR COMPANY — DEARBORN, MICHIGAN

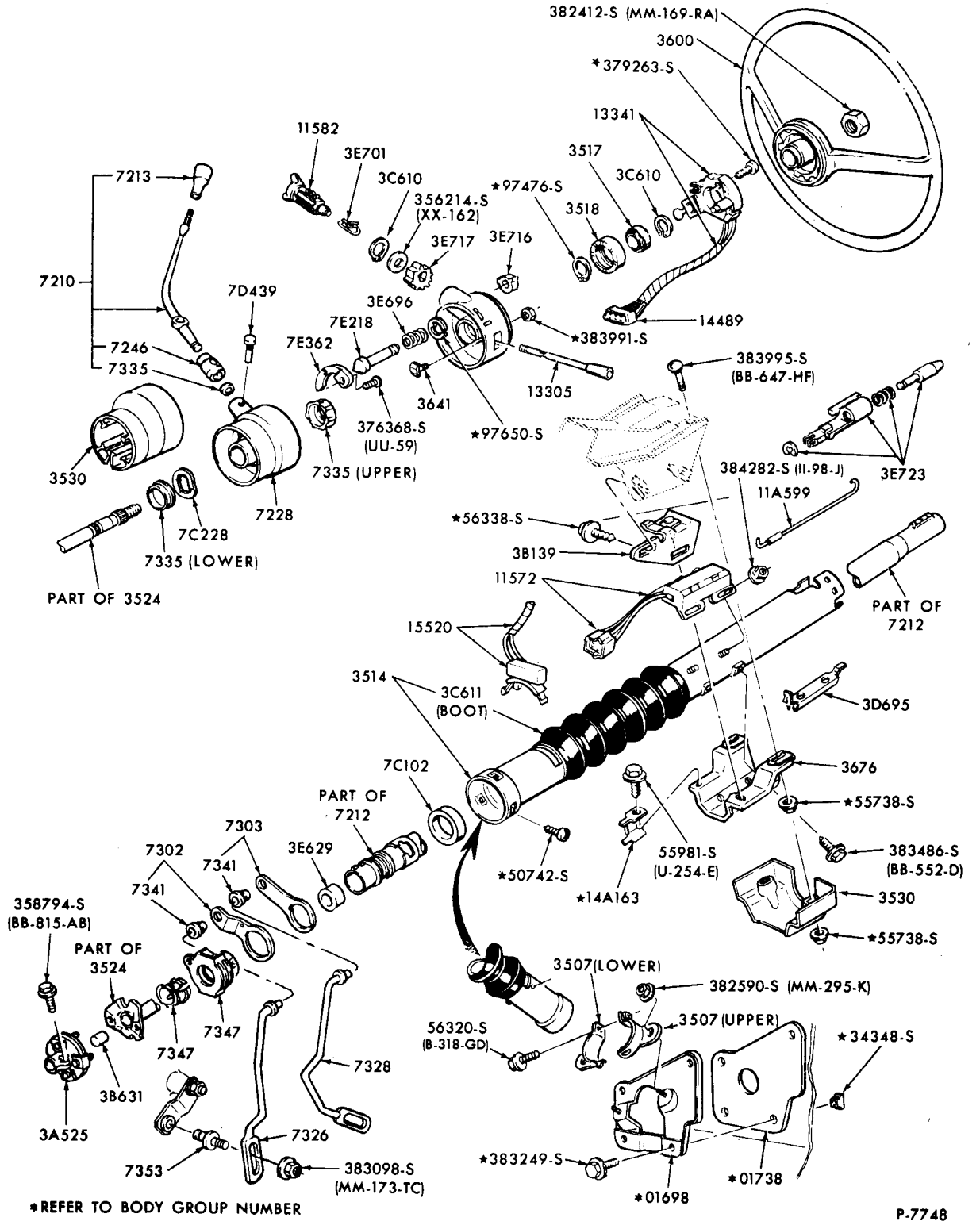

STEERING COLUMN & SHIFT MECHANISM - LOCKING
3 SPEED MANUAL TRANSMISSION
1970/72 MAVERICK

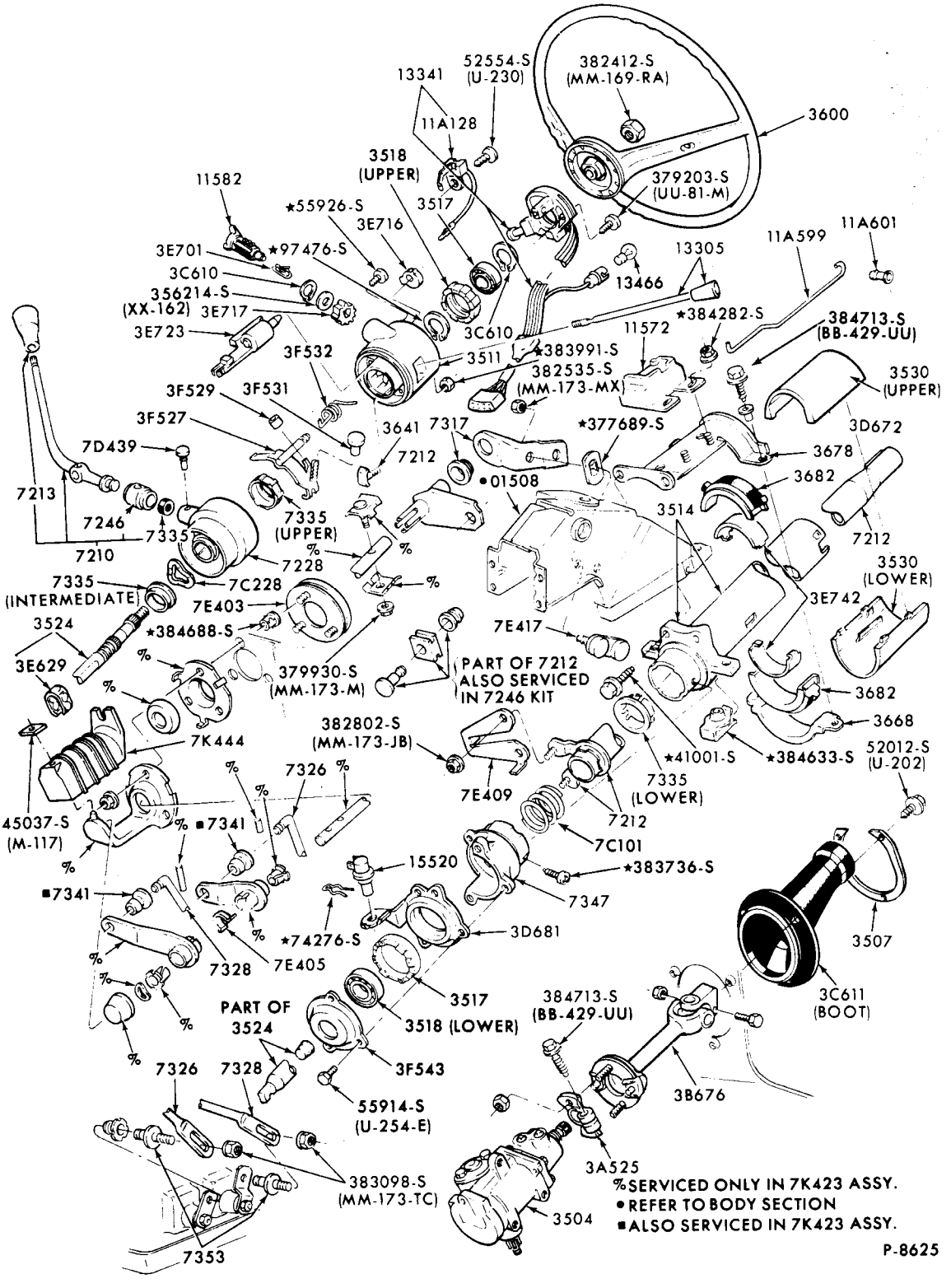

STEERING COLUMN and SHIFT MECHANISM - LOCKING
3 SPEED MANUAL TRANSMISSION
1972 TORINO

COPYRIGHT © 1975 — FORD MOTOR COMPANY — DEARBORN, MICHIGAN

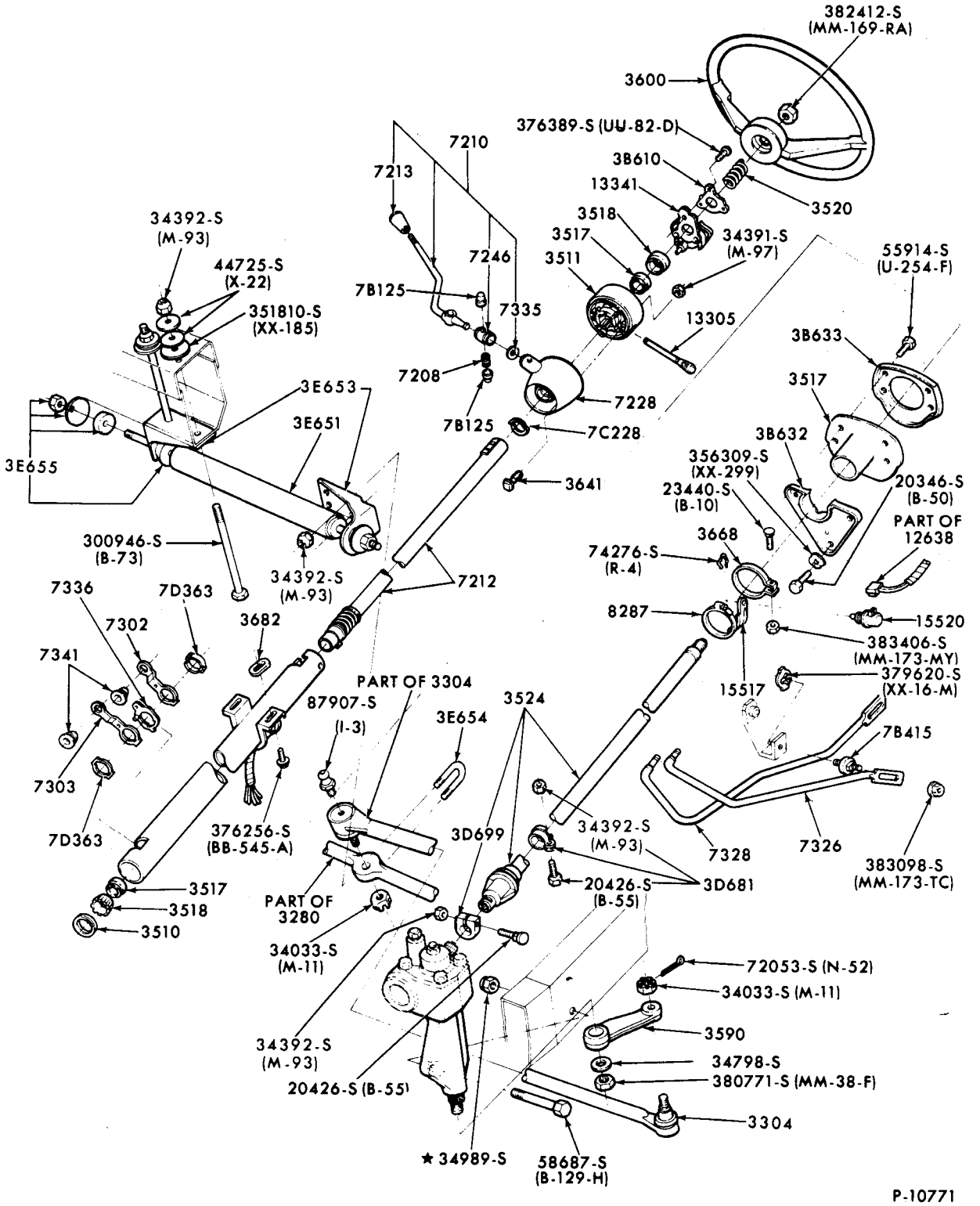

STEERING COLUMN AND SHIFT MECHANISM-MANUAL STEERING
1972 BRONCO

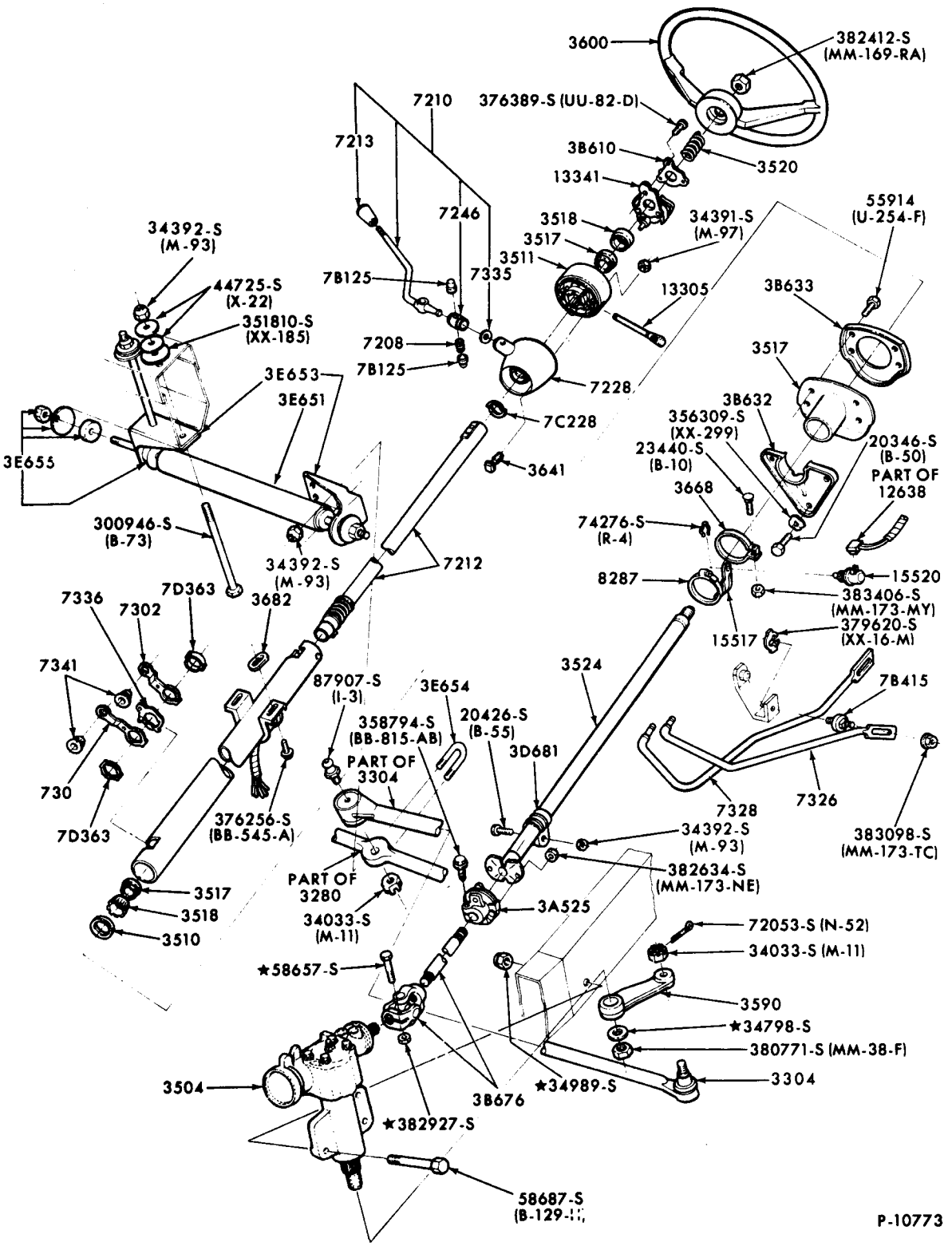

STEERING COLUMN AND SHIFT MECHANISM-POWER STEERING
1972 BRONCO

COPYRIGHT © 1975 — FORD MOTOR COMPANY — DEARBORN, MICHIGAN

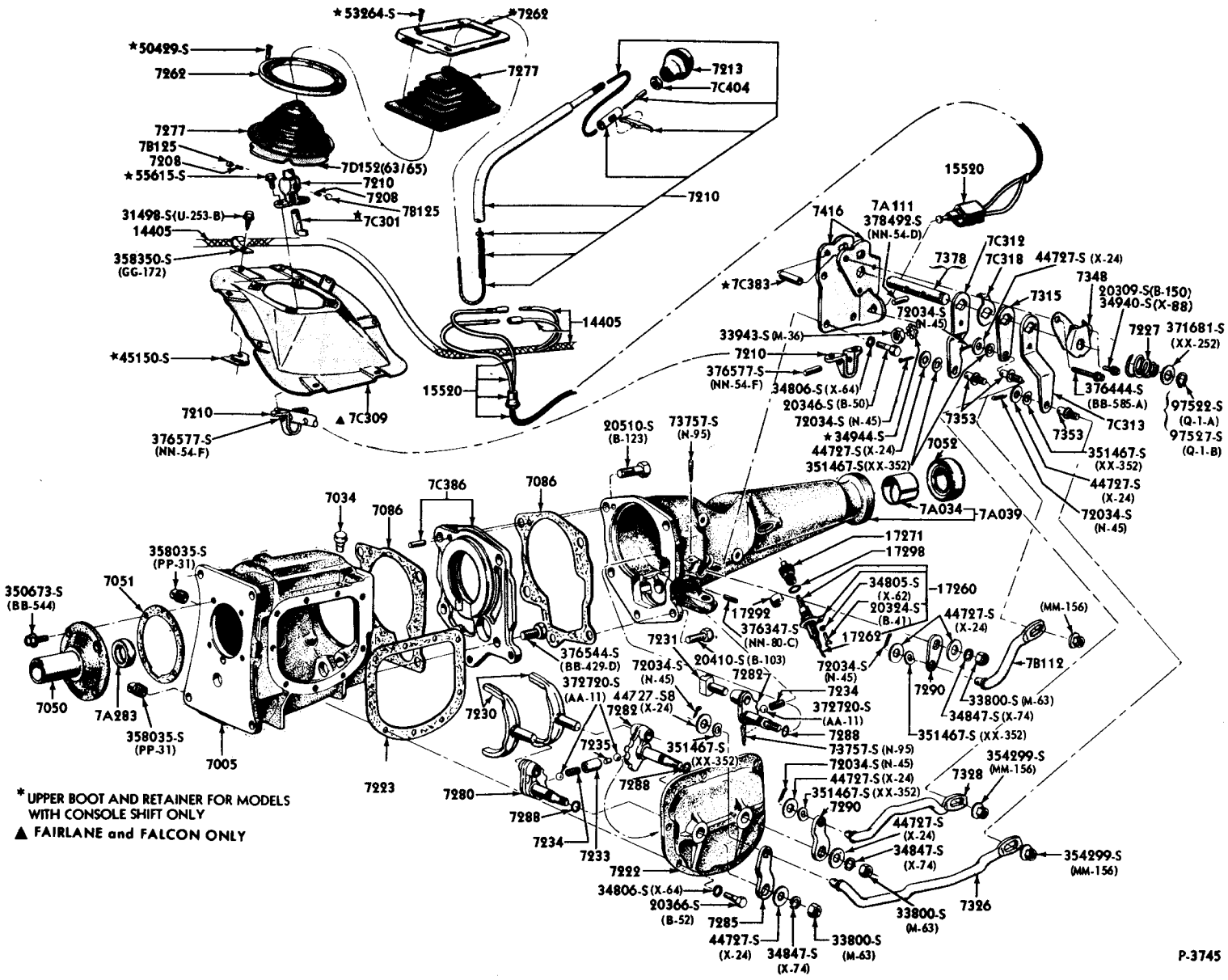

* UPPER BOOT AND RETAINER FOR MODELS WITH CONSOLE SHIFT ONLY

▲ FAIRLANE and FALCON ONLY

GEAR SHIFT MECHANISM - CONSOLE or FLOOR MOUNTED - TYPICAL
4 SPEED MANUAL TRANSMISSION - WARNER DESIGN
1965/66 FAIRLANE, MUSTANG & FALCON

COPYRIGHT © 1975 — FORD MOTOR COMPANY — DEARBORN, MICHIGAN

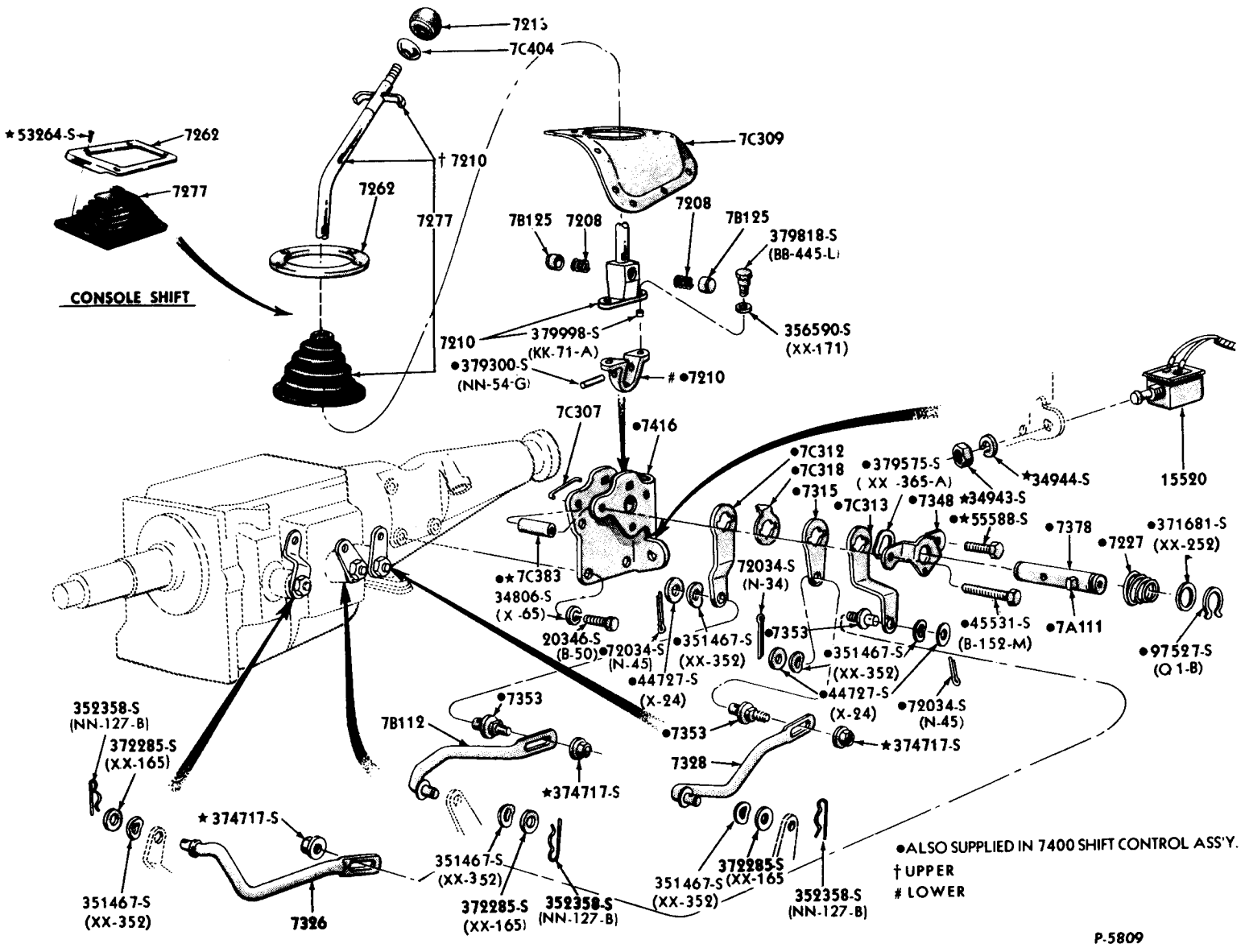

GEAR SHIFT MECHANISM - CONSOLE or FLOOR MOUNTED - TYPICAL
4 SPEED MANUAL TRANSMISSION - FORD DESIGN
1965/67 FORD

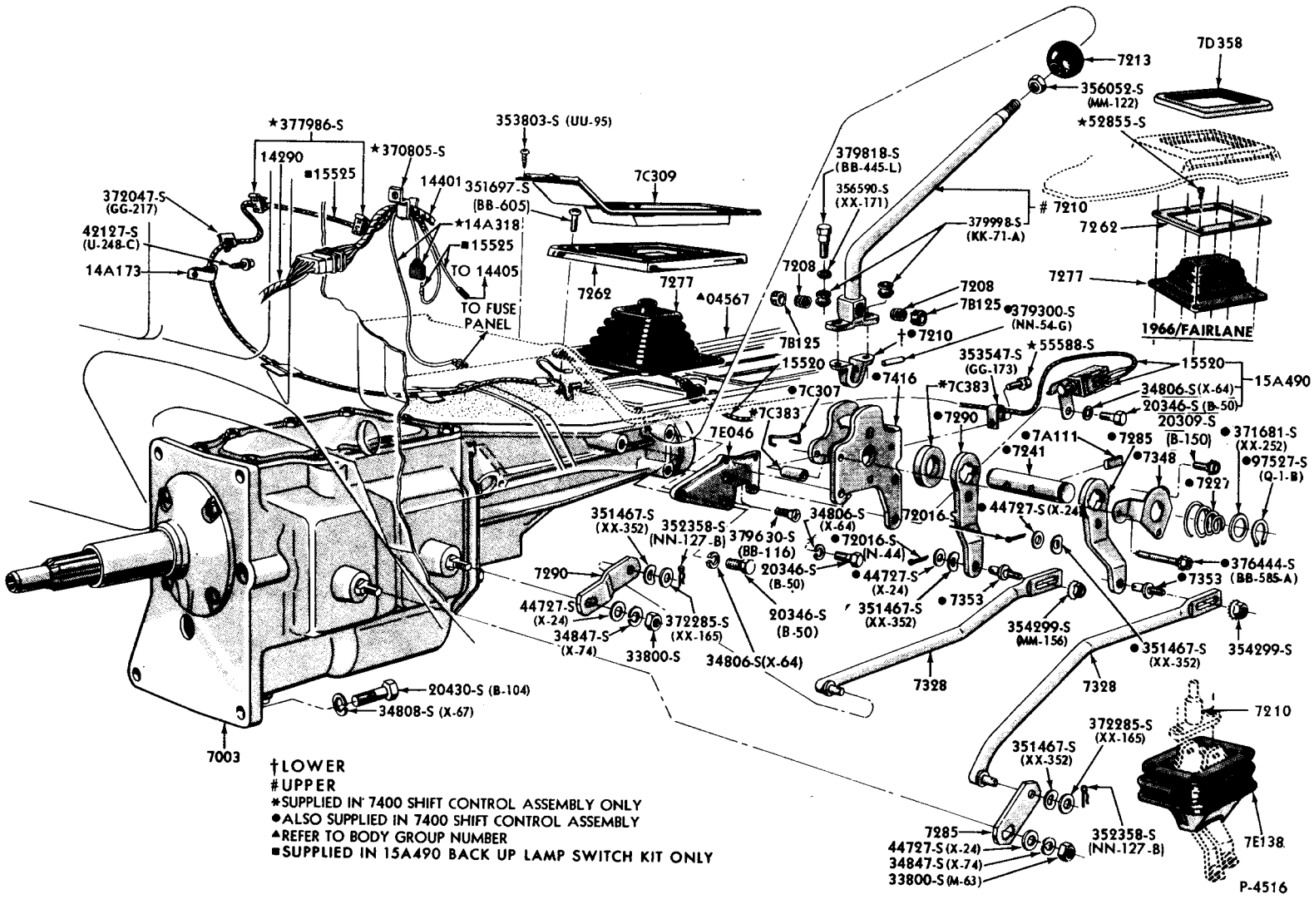

†LOWER
#UPPER
*SUPPLIED IN 7400 SHIFT CONTROL ASSEMBLY ONLY
●ALSO SUPPLIED IN 7400 SHIFT CONTROL ASSEMBLY
▲REFER TO BODY GROUP NUMBER
■SUPPLIED IN 15A490 BACK UP LAMP SWITCH KIT ONLY

GEAR SHIFT MECHANISM - FLOOR MOUNTED
3 SPEED MANUAL TRANSMISSION
1965/68 FAIRLANE/TORINO & MUSTANG

COPYRIGHT © 1975 — FORD MOTOR COMPANY — DEARBORN, MICHIGAN

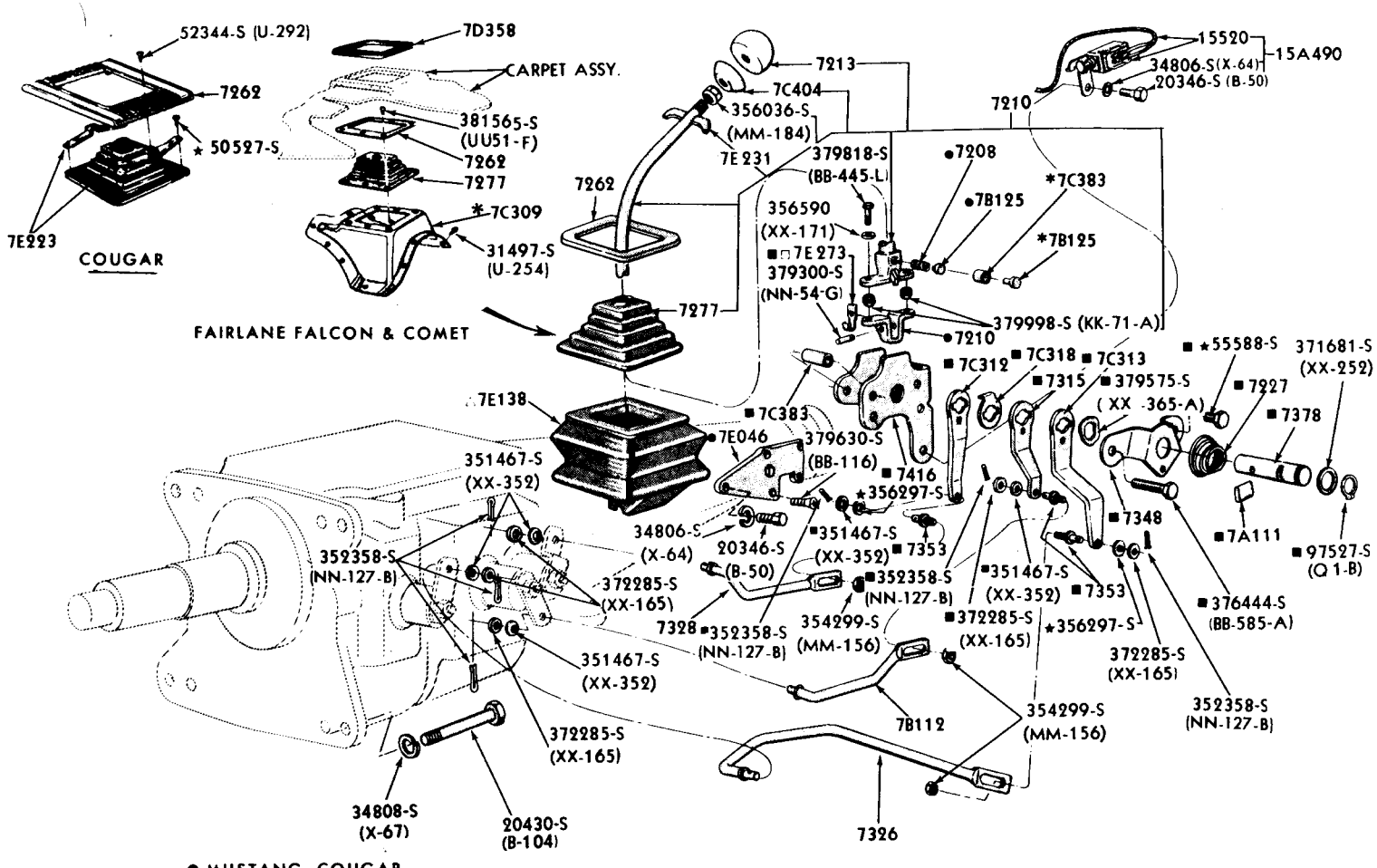

● MUSTANG, COUGAR
* FAIRLANE, FALCON & COMET
△ 1966/MODELS ONLY
■ ALSO SUPPLIED IN 7400 SHIFT CONTROL ASS'Y.
□ 1968 ONLY

P-5810

GEAR SHIFT MECHANISM - CONSOLE or FLOOR MOUNTED - TYPICAL
4 SPEED MANUAL TRANSMISSION - FORD DESIGN
1965/68 FAIRLANE/TORINO, MUSTANG & FALCON

GEAR SHIFT MECHANISM
4 SPEED MANUAL TRANSMISSION - DAGENHAM DESIGN
1965/66 MUSTANG

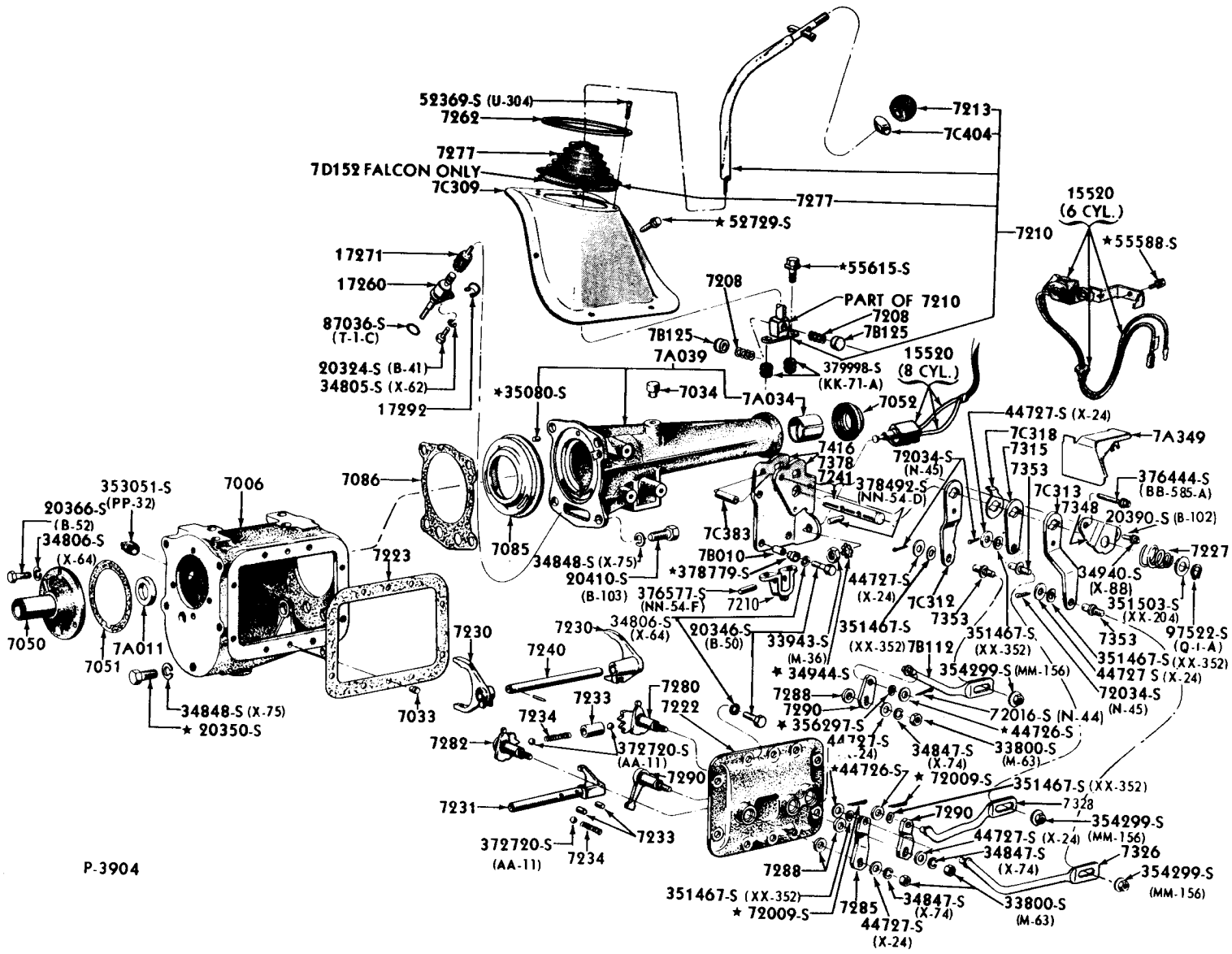

COPYRIGHT © 1975 — FORD MOTOR COMPANY — DEARBORN, MICHIGAN

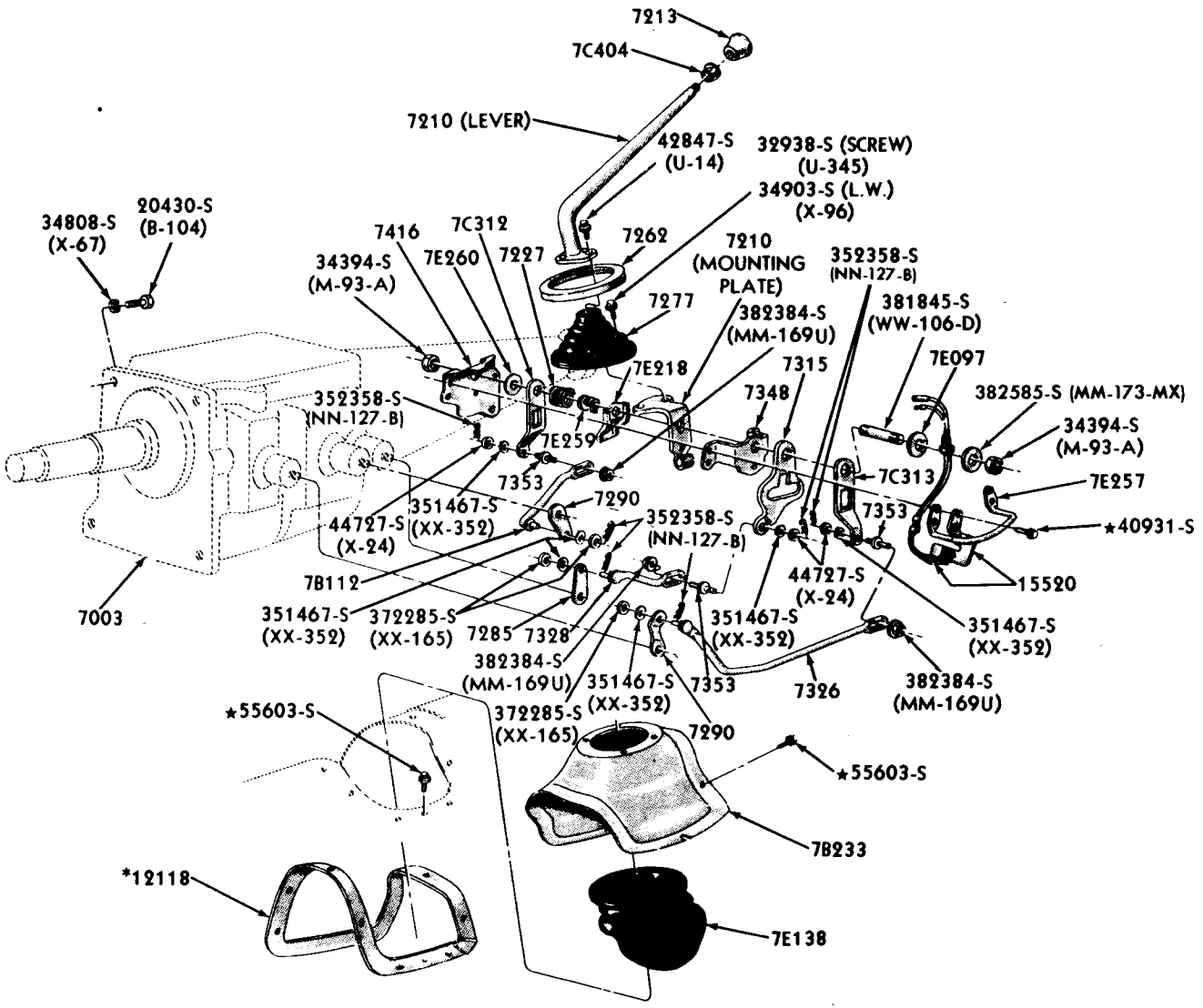

*REFER TO BODY GROUP NUMBER

P-6195

GEAR SHIFT MECHANISM - CONSOLE or FLOOR MOUNTED
4 SPEED MANUAL TRANSMISSION - FORD DESIGN
1968 FORD

GEAR SHIFT MECHANISM - CONSOLE or FLOOR MOUNTED - TYPICAL
3 SPEED MANUAL TRANSMISSION
1969/71 FAIRLANE/TORINO, MUSTANG, 1971/72 MAVERICK

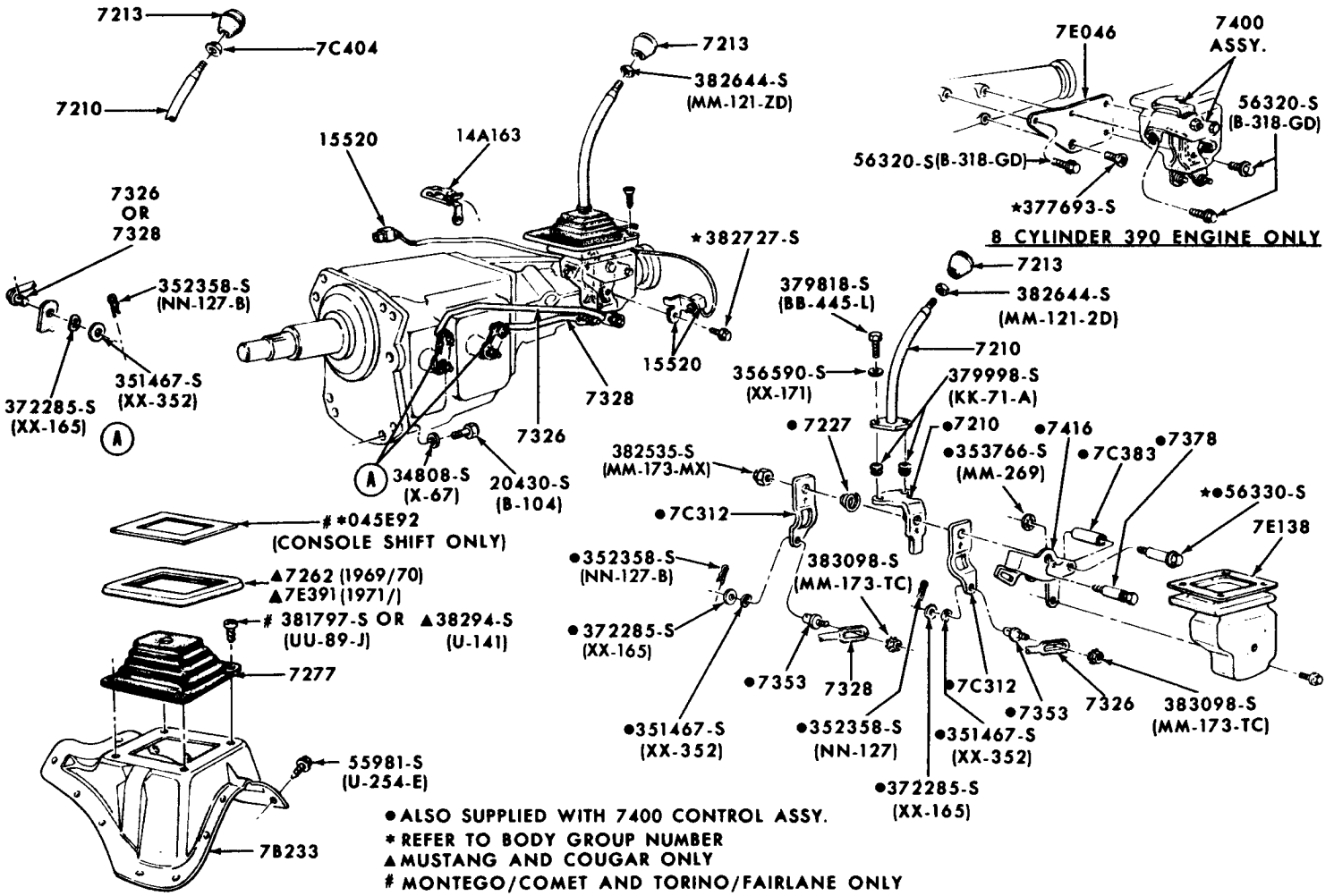

• ALSO SUPPLIED WITH 7400 CONTROL ASSY.
* REFER TO BODY GROUP NUMBER
▲ MUSTANG AND COUGAR ONLY
MONTEGO/COMET AND TORINO/FAIRLANE ONLY

P-6794

COPYRIGHT © 1975 — FORD MOTOR COMPANY — DEARBORN, MICHIGAN

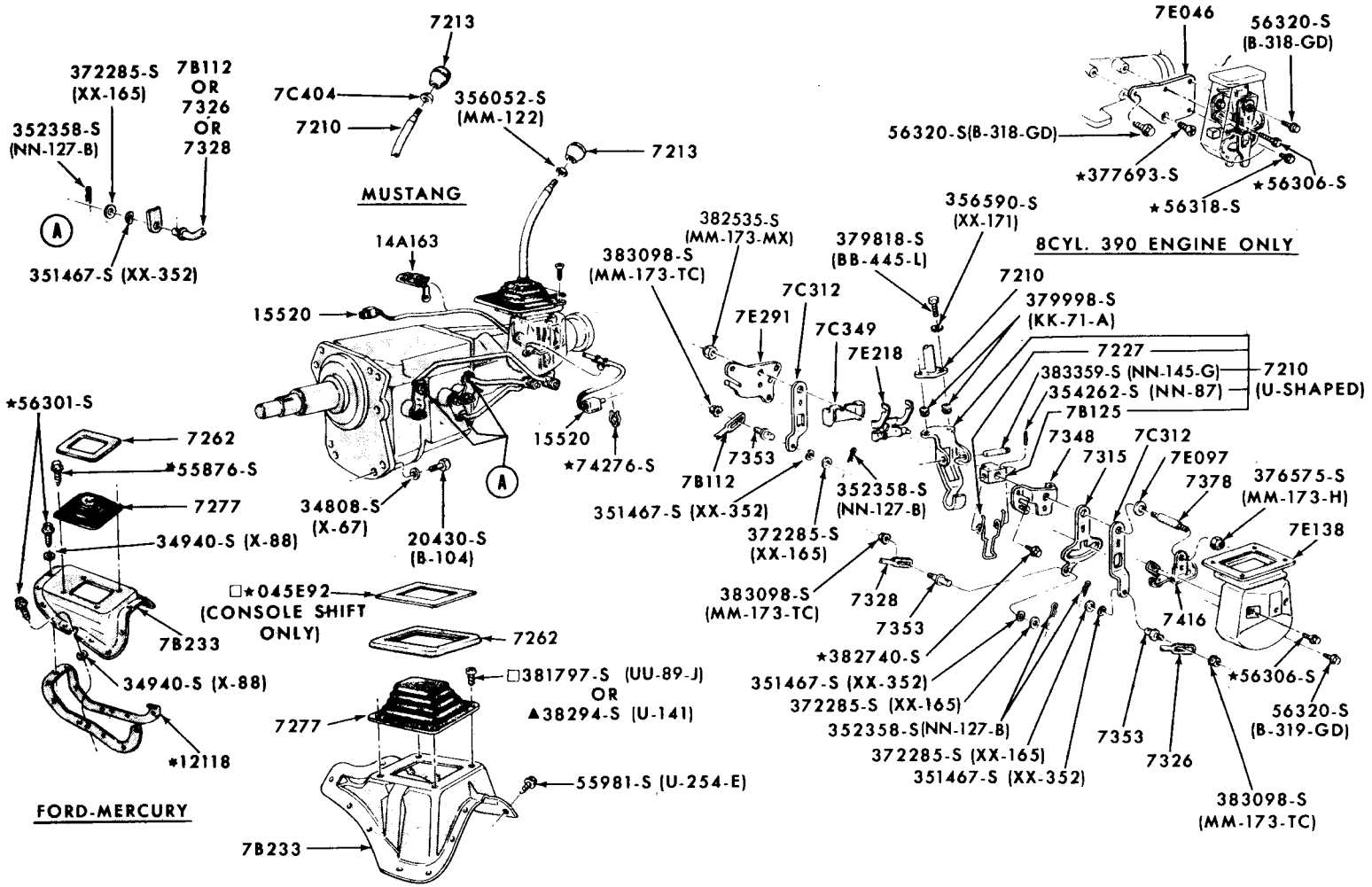

GEAR SHIFT MECHANISM - CONSOLE or FLOOR MOUNTED - TYPICAL
4 SPEED MANUAL TRANSMISSION
1969 FORD, FAIRLANE/TORINO, MUSTANG & FALCON

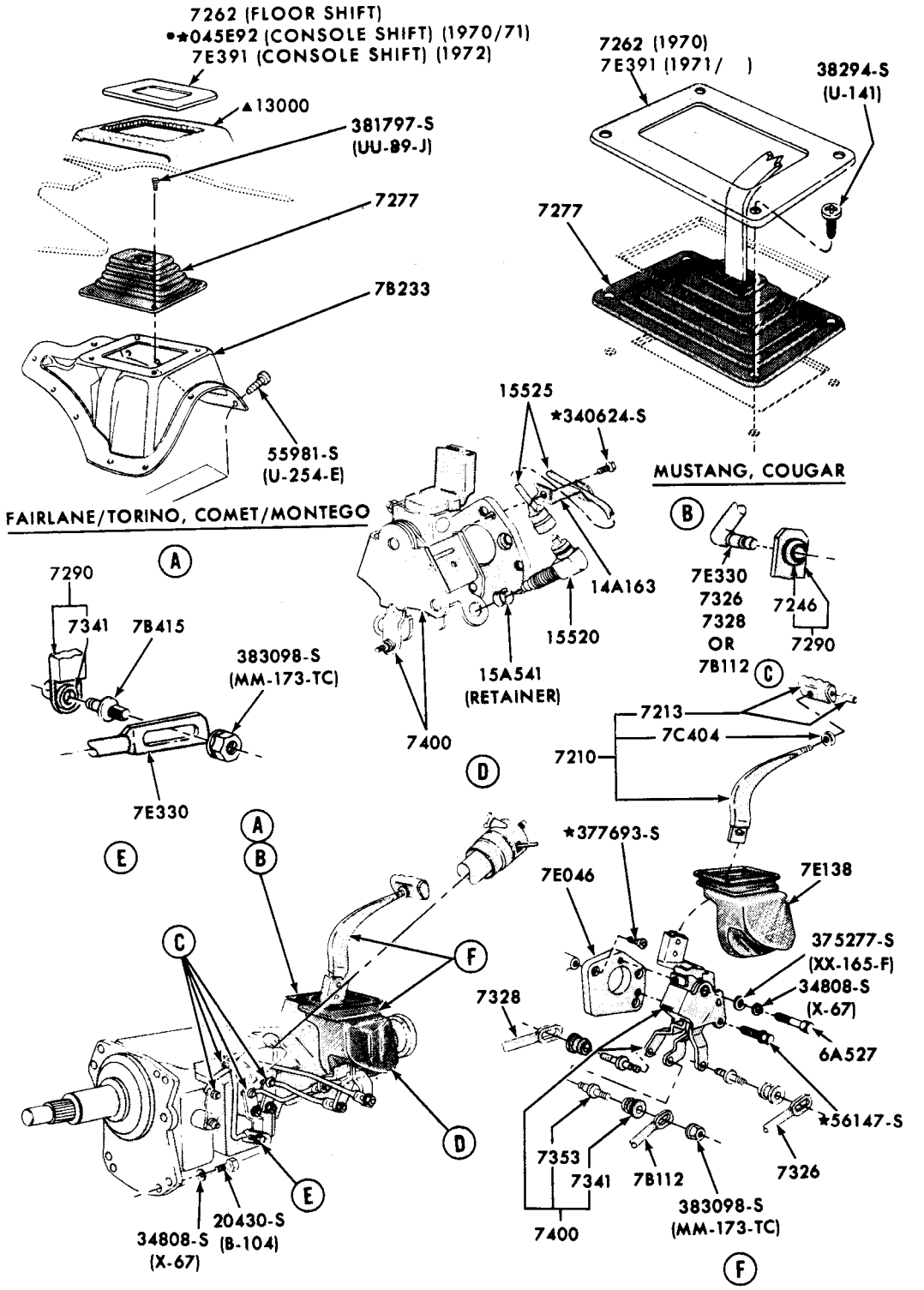

▲ REFER TO SOFT TRIM SECTION
• REFER TO BODY SECTION

P-7499

GEAR SHIFT MECHANISM - HURST FLOOR MOUNTED
4-SPEED MANUAL TRANSMISSION
1970/72 FAIRLANE/TORINO & MUSTANG

COPYRIGHT © 1975 — FORD MOTOR COMPANY — DEARBORN, MICHIGAN

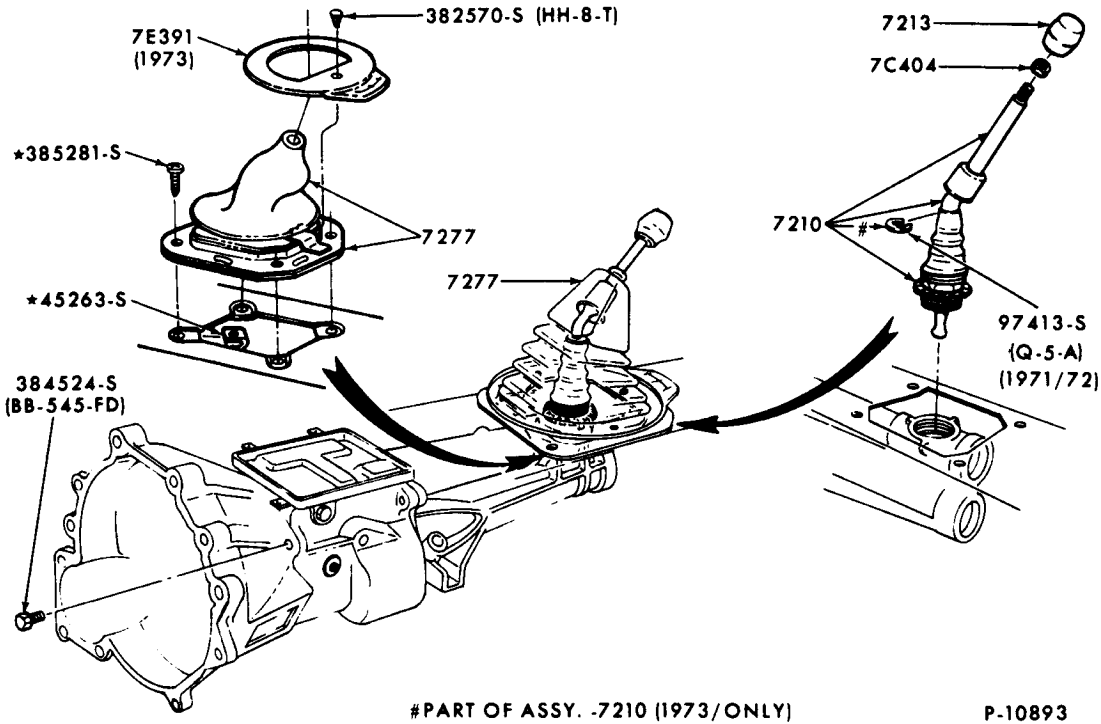

#PART OF ASSY. -7210 (1973/ONLY)

P-10893

GEAR SHIFT MECHANISM
4 SPEED MANUAL TRANSMISSION
1971/72 PINTO

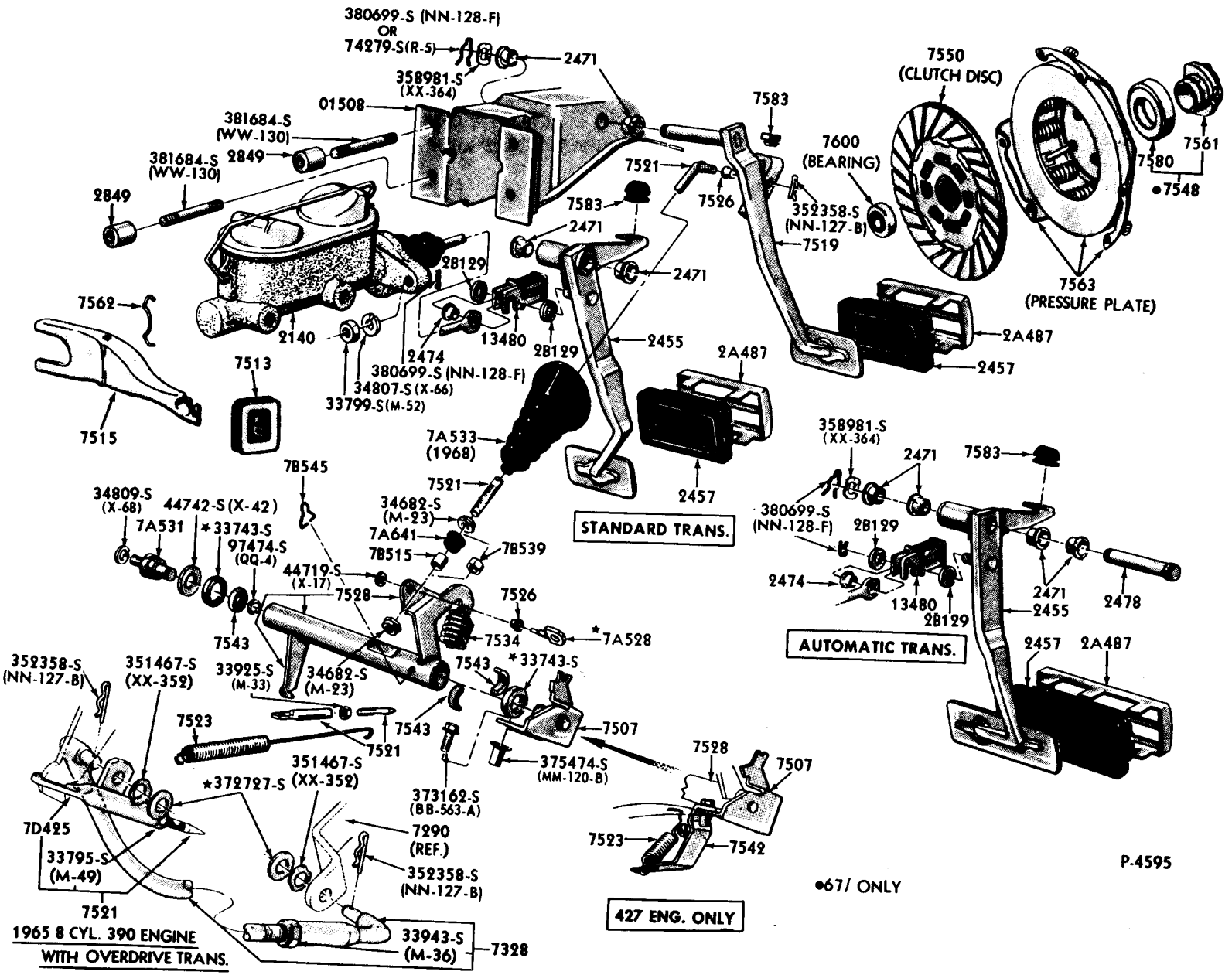

CLUTCH, CLUTCH PEDAL and BRAKE PEDAL
1965/68 FORD

COPYRIGHT © 1975 — FORD MOTOR COMPANY — DEARBORN, MICHIGAN

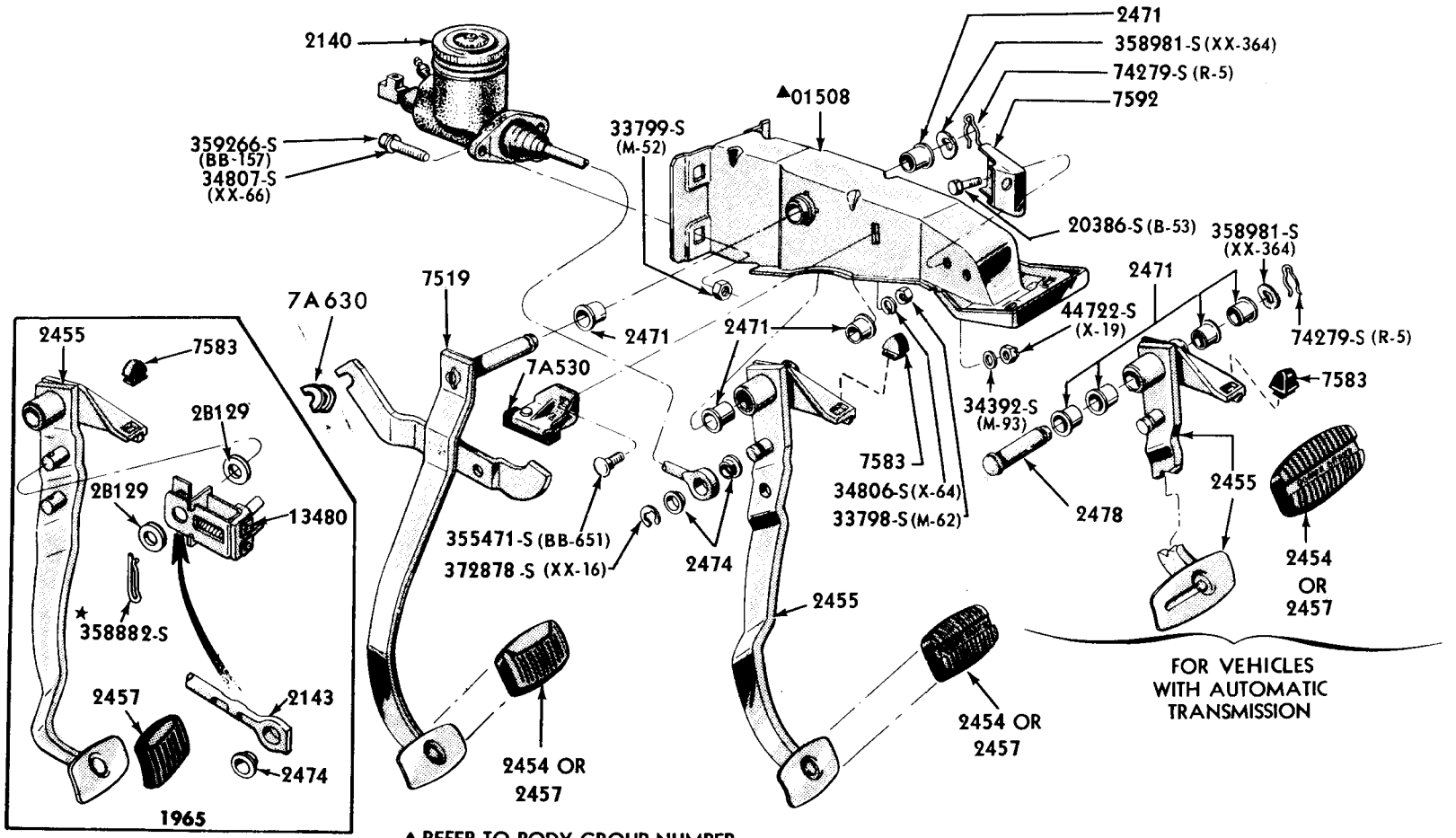

▲ REFER TO BODY GROUP NUMBER
* PART OF 2140 ASSEMBLY

P-3674

CLUTCH and CLUTCH PEDAL - TYPICAL
1965 FAIRLANE

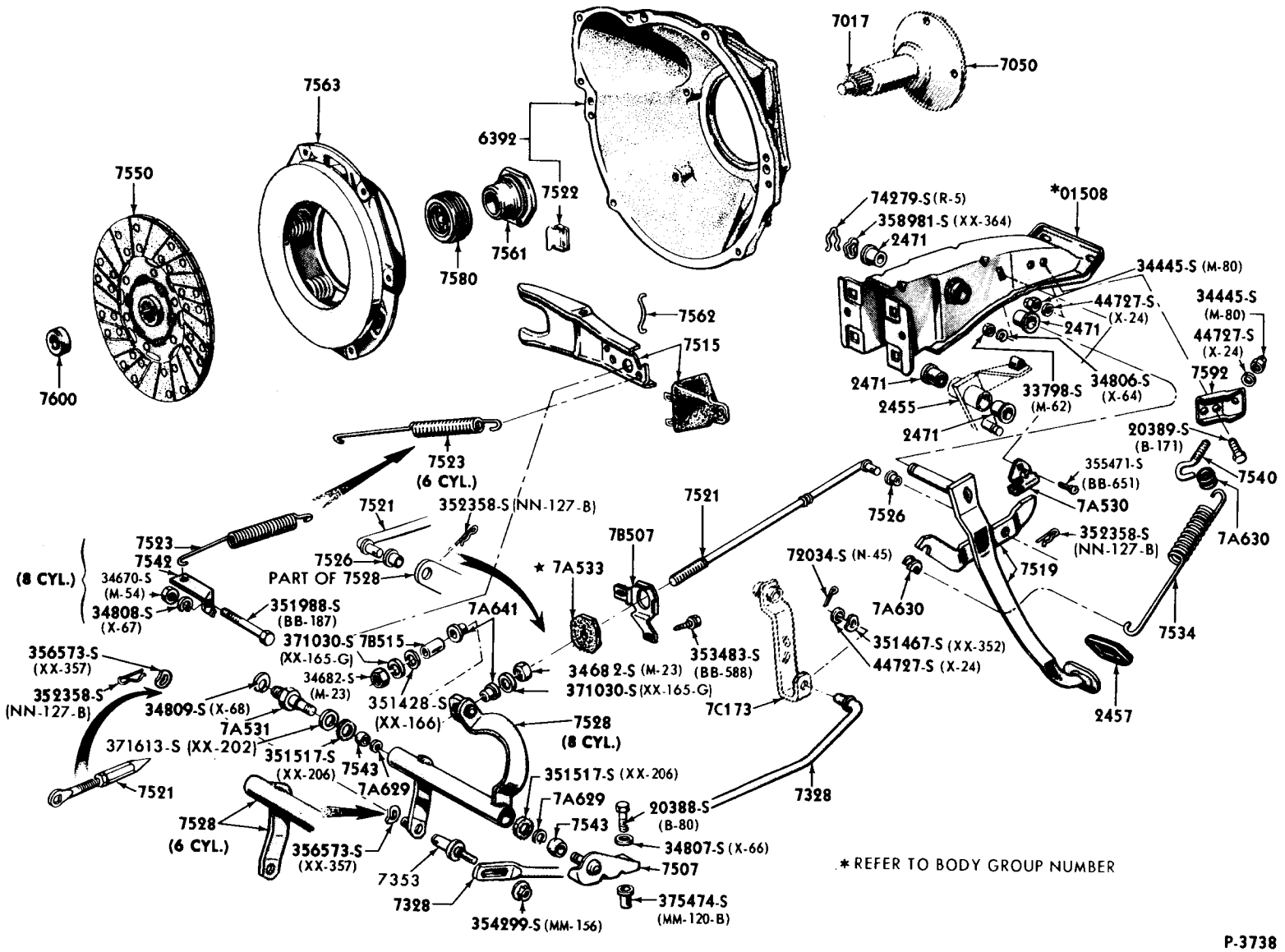

COPYRIGHT © 1975 — FORD MOTOR COMPANY — DEARBORN, MICHIGAN

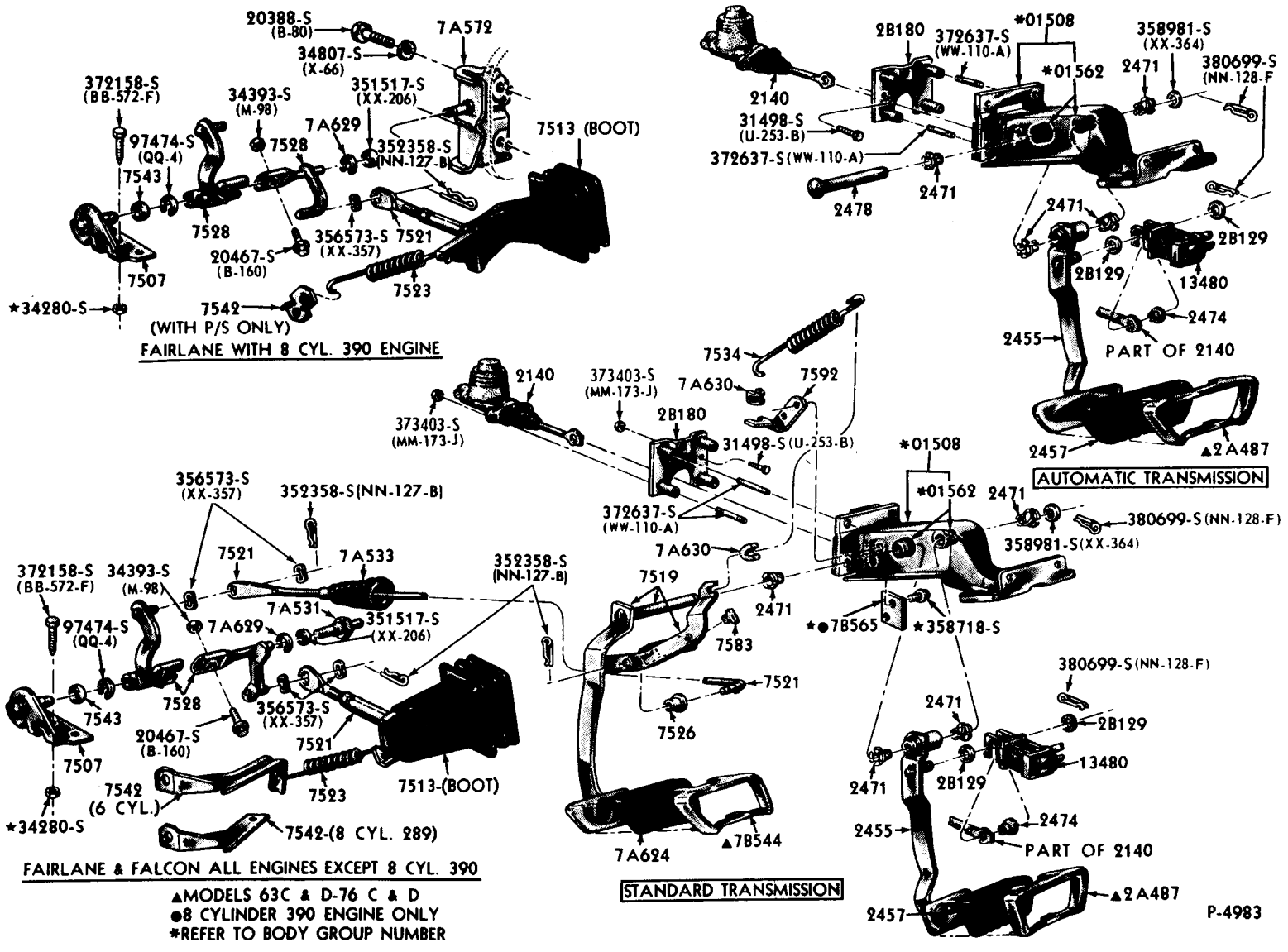

FAIRLANE & FALCON ALL ENGINES EXCEPT 8 CYL. 390

▲MODELS 63C & D-76 C & D
●8 CYLINDER 390 ENGINE ONLY
*REFER TO BODY GROUP NUMBER

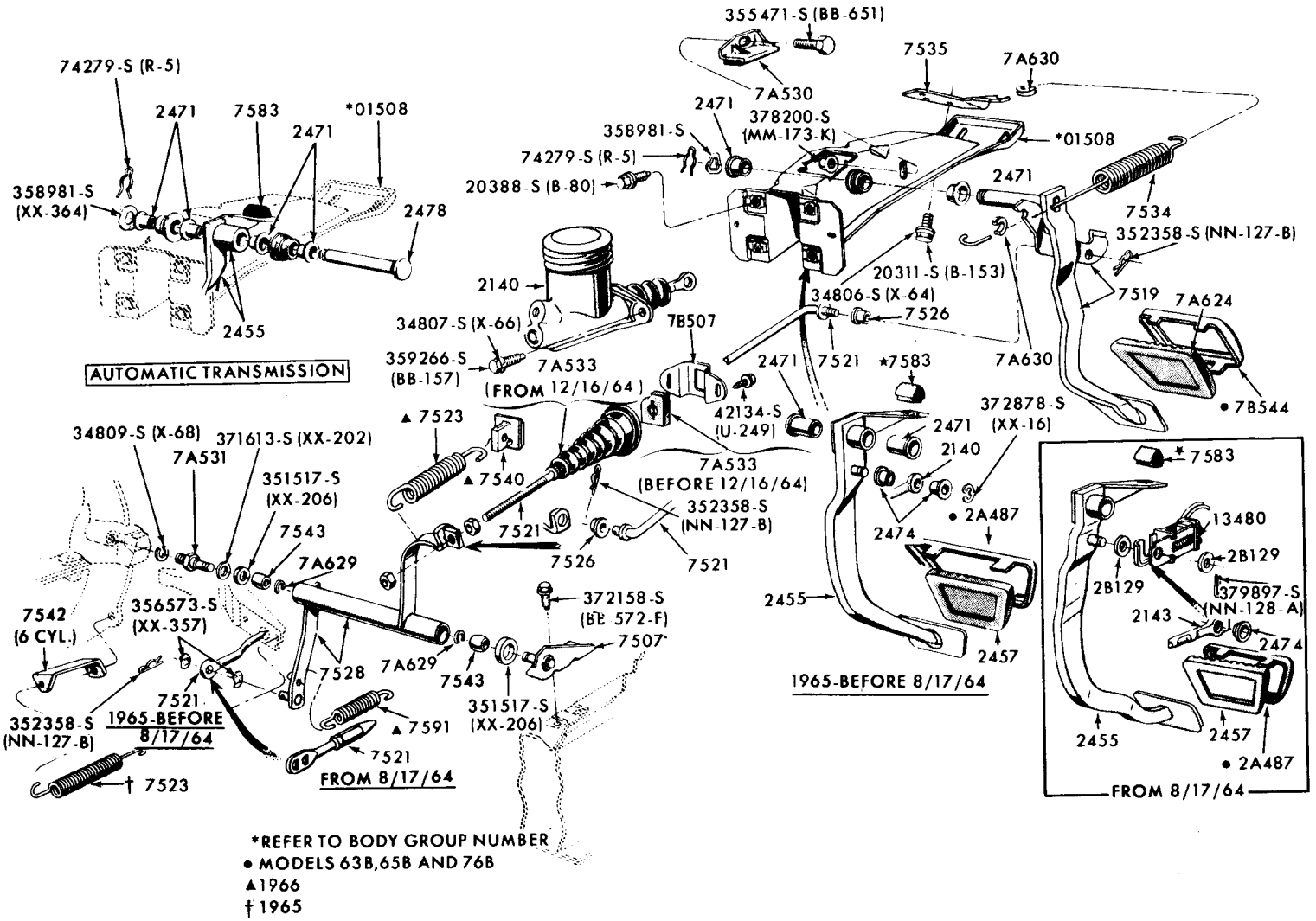

CLUTCH PEDAL and BRAKE PEDAL
1965/66 MUSTANG

P-4472

COPYRIGHT © 1975 — FORD MOTOR COMPANY — DEARBORN, MICHIGAN

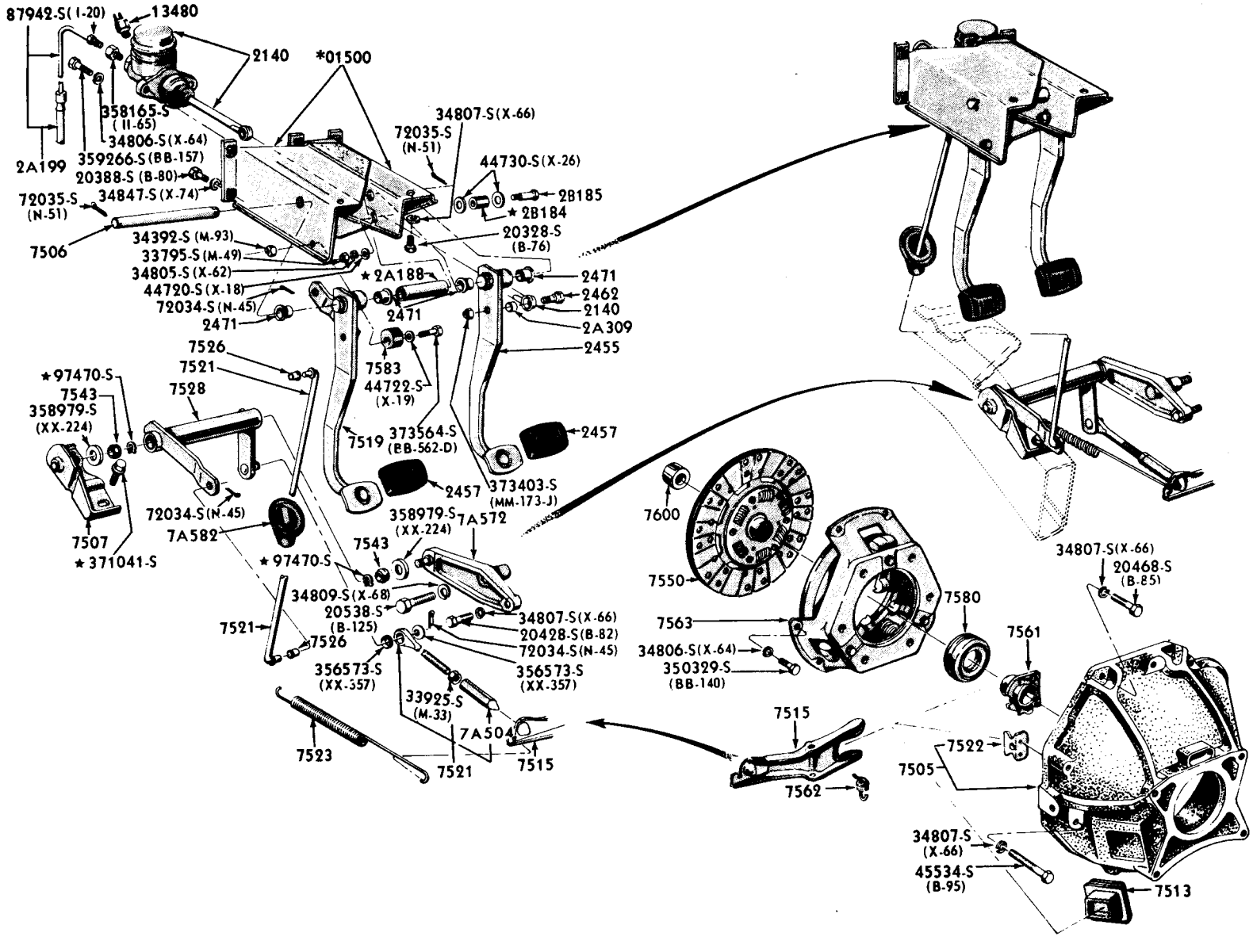
87942-S (I-20)
13480
2140
*01500
358165-S (II-65)
34806-S (X-64)
359266-S (BB-157)
2A199
20388-S (B-80)
72035-S (N-51)
34847-S (X-74)
7506
34807-S (X-66)
72035-S (N-51)
44730-S (X-26)
2B185
★ 2B184
20328-S (B-76)
34392-S (M-93)
33795-S (M-49)
34805-S (X-62)
44720-S (X-18)
72034-S (N-45)
2471
★ 2A188
2471
2471
2462
2140
2A309
2455
7526
7521
7583
44722-S (X-19)
★ 97470-S
7543
358979-S (XX-224)
7528
7519
373564-S (BB-562-D)
2457
2457
373403-S (MM-173-J)
72034-S (N-45)
7A582
7507
★ 371041-S
358979-S (XX-224)
7A572
7543
★ 97470-S
34809-S (X-68)
20538-S (B-125)
7521
7526
34807-S (X-66)
20428-S (B-82)
72034-S (N-45)
356573-S (XX-357)
356573-S (XX-357)
33925-S (M-33)
7A504
7523
7521
7515
7600
7550
7563
34806-S (X-64)
350329-S (BB-140)
7580
7561
34807-S (X-66)
20468-S (B-85)
7515
7562
7522
7505
34807-S (X-66)
45534-S (B-95)
7513

P-4972

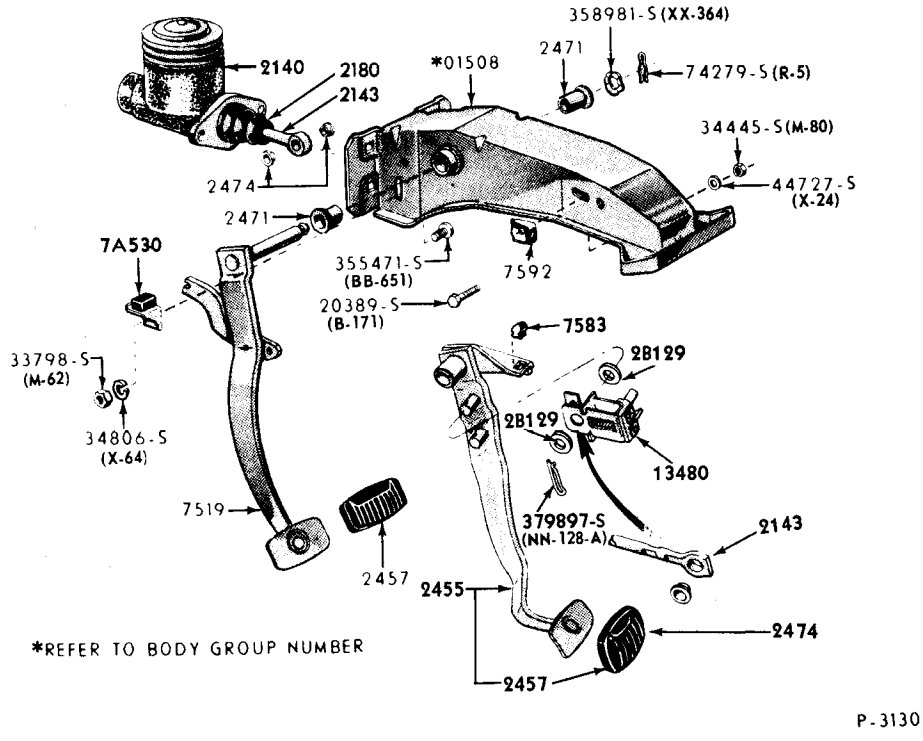

CLUTCH PEDAL and BRAKE PEDAL (MANUAL TRANSMISSION)
1965 FALCON

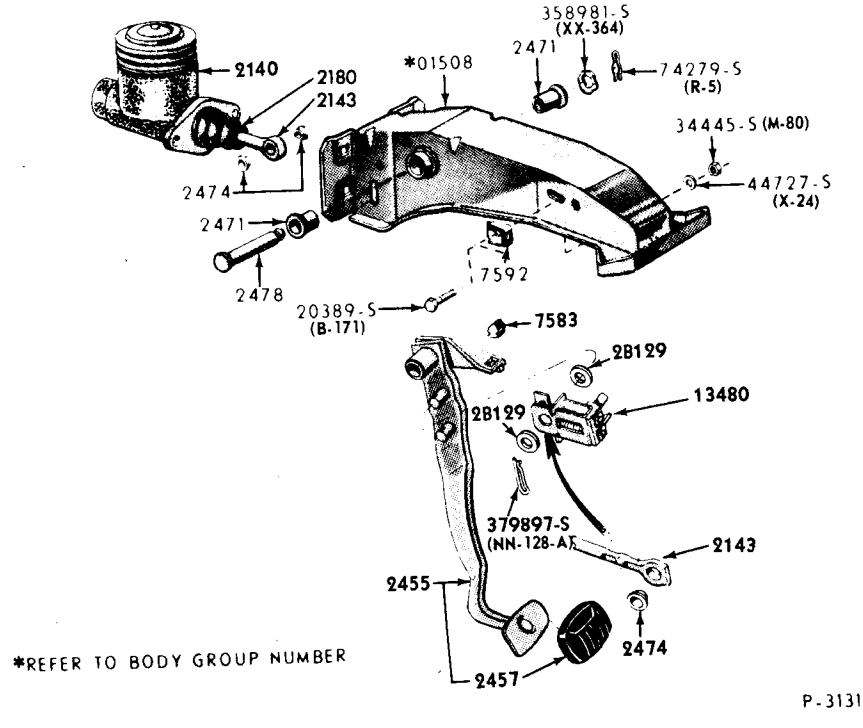

BRAKE PEDAL (AUTOMATIC TRANSMISSION)
1965 FALCON

COPYRIGHT © 1975 — FORD MOTOR COMPANY — DEARBORN, MICHIGAN

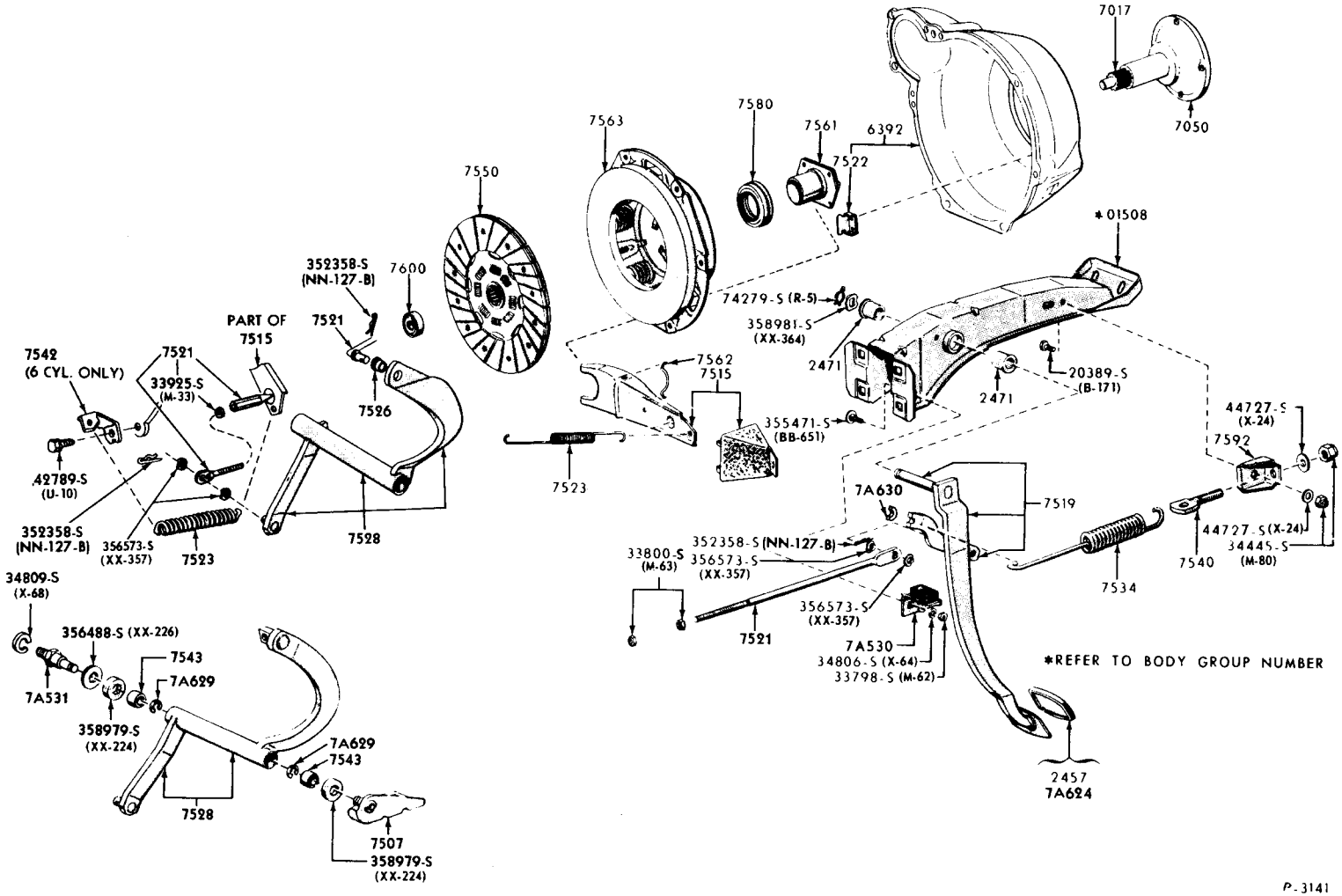
7017
7050
7580
7563
7561
6392
7522
7550
*01508
352358-S (NN-127-B)
7600
74279-S (R-5)
358981-S (XX-364)
PART OF 7515
7521
7542 (6 CYL. ONLY)
7521
33925-S (M-33)
7562
7515
2471
2471
20389-S (B-171)
7526
355471-S (BB-651)
44727-S (X-24)
7592
42789-S (U-10)
7523
7A630
7519
352358-S (NN-127-B)
356573-S (XX-357)
7523
7528
352358-S (NN-127-B)
33800-S (M-63)
356573-S (XX-357)
44727-S (X-24)
34445-S (M-80)
7540
7534
34809-S (X-68)
356573-S (XX-357)
7521
356488-S (XX-226)
7543
7A629
7A530
34806-S (X-64)
33798-S (M-62)
*REFER TO BODY GROUP NUMBER
7A531
358979-S (XX-224)
7A629
7543
7528
7507
358979-S (XX-224)
2457
7A624
P-3141

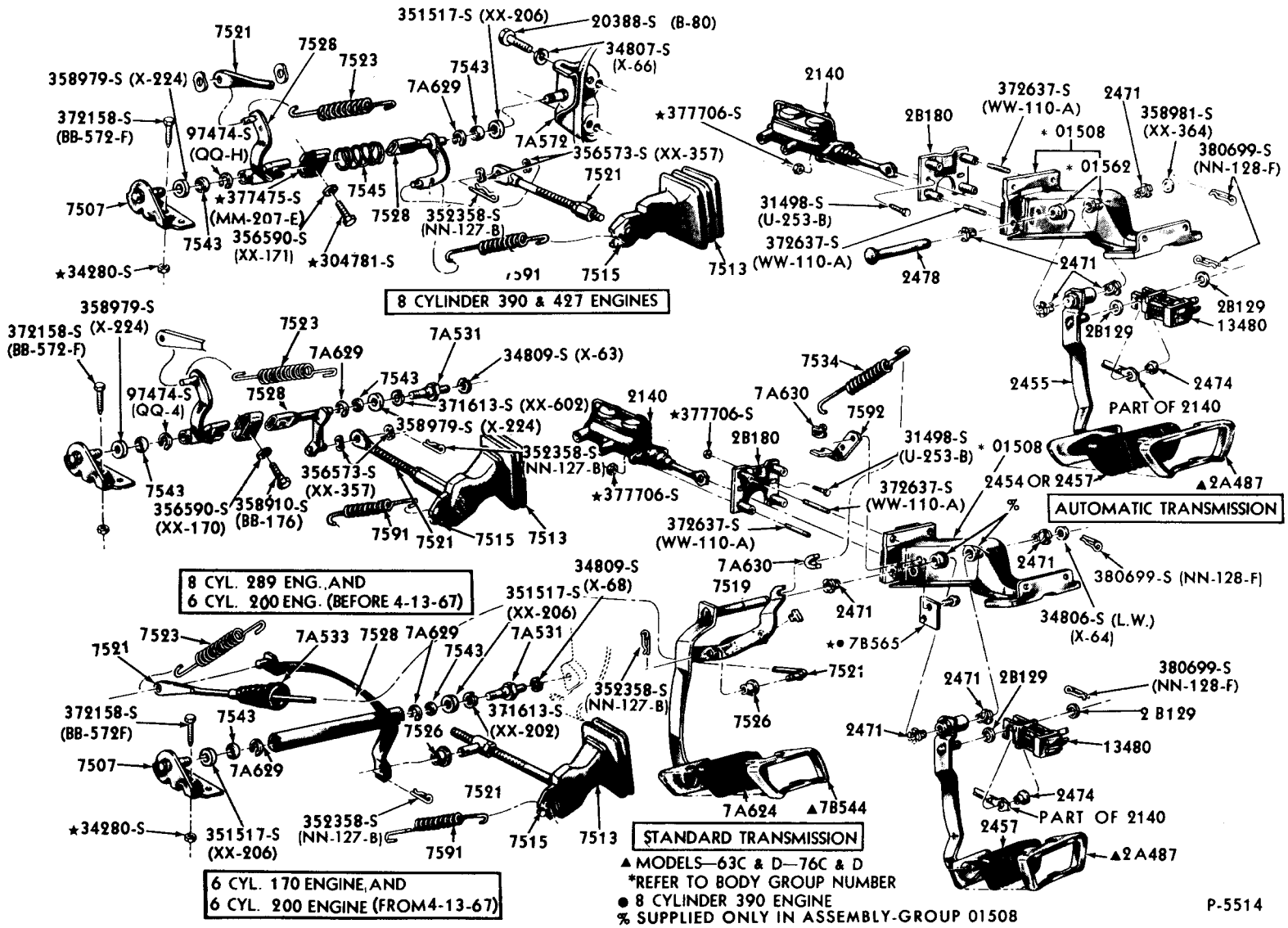

COPYRIGHT © 1975 — FORD MOTOR COMPANY — DEARBORN, MICHIGAN

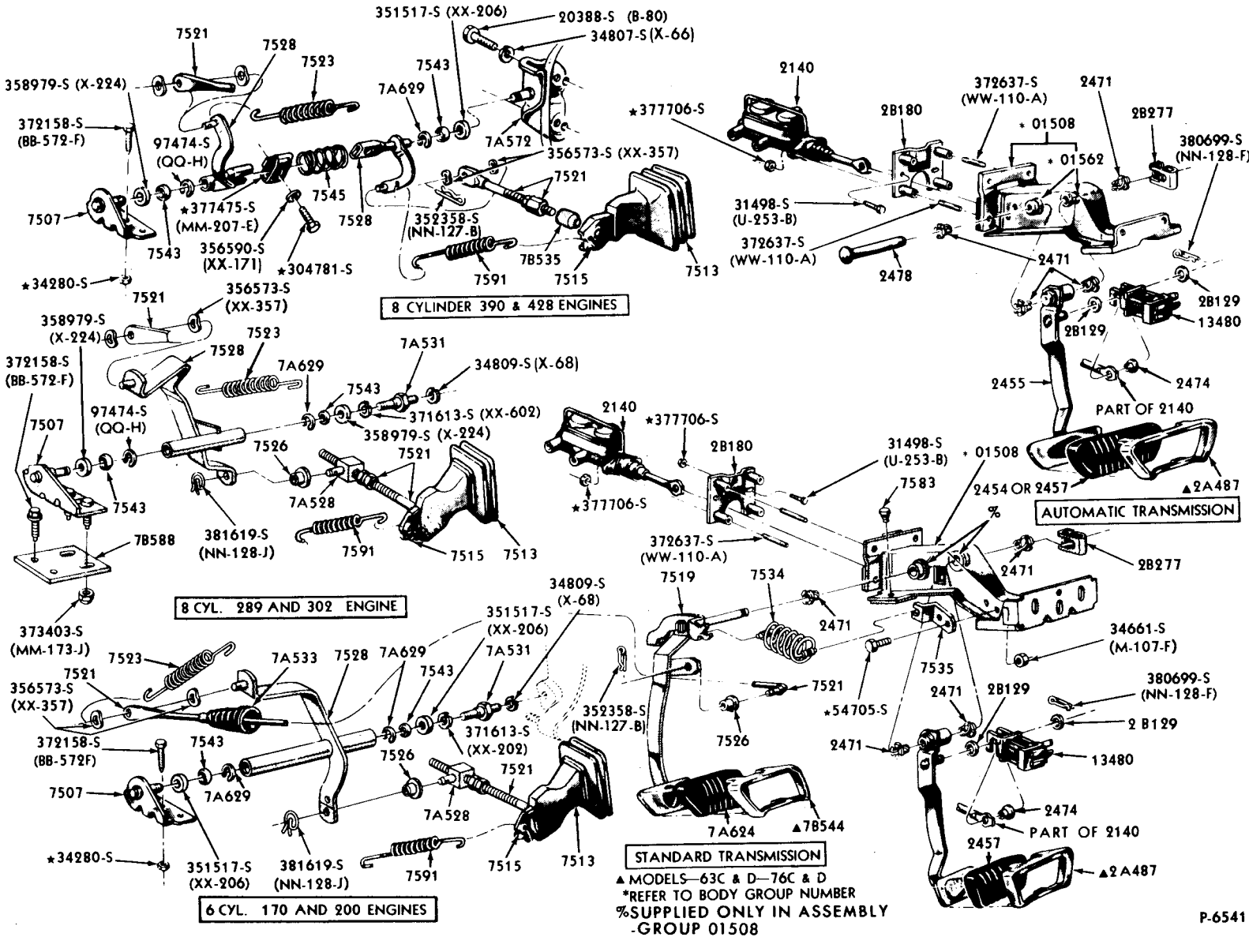
8 CYLINDER 390 & 428 ENGINES
8 CYL. 289 AND 302 ENGINE
6 CYL. 170 AND 200 ENGINES
AUTOMATIC TRANSMISSION
STANDARD TRANSMISSION
▲ MODELS—63C & D—76C & D
*REFER TO BODY GROUP NUMBER
%SUPPLIED ONLY IN ASSEMBLY -GROUP 01508
PART OF 2140
P-6541

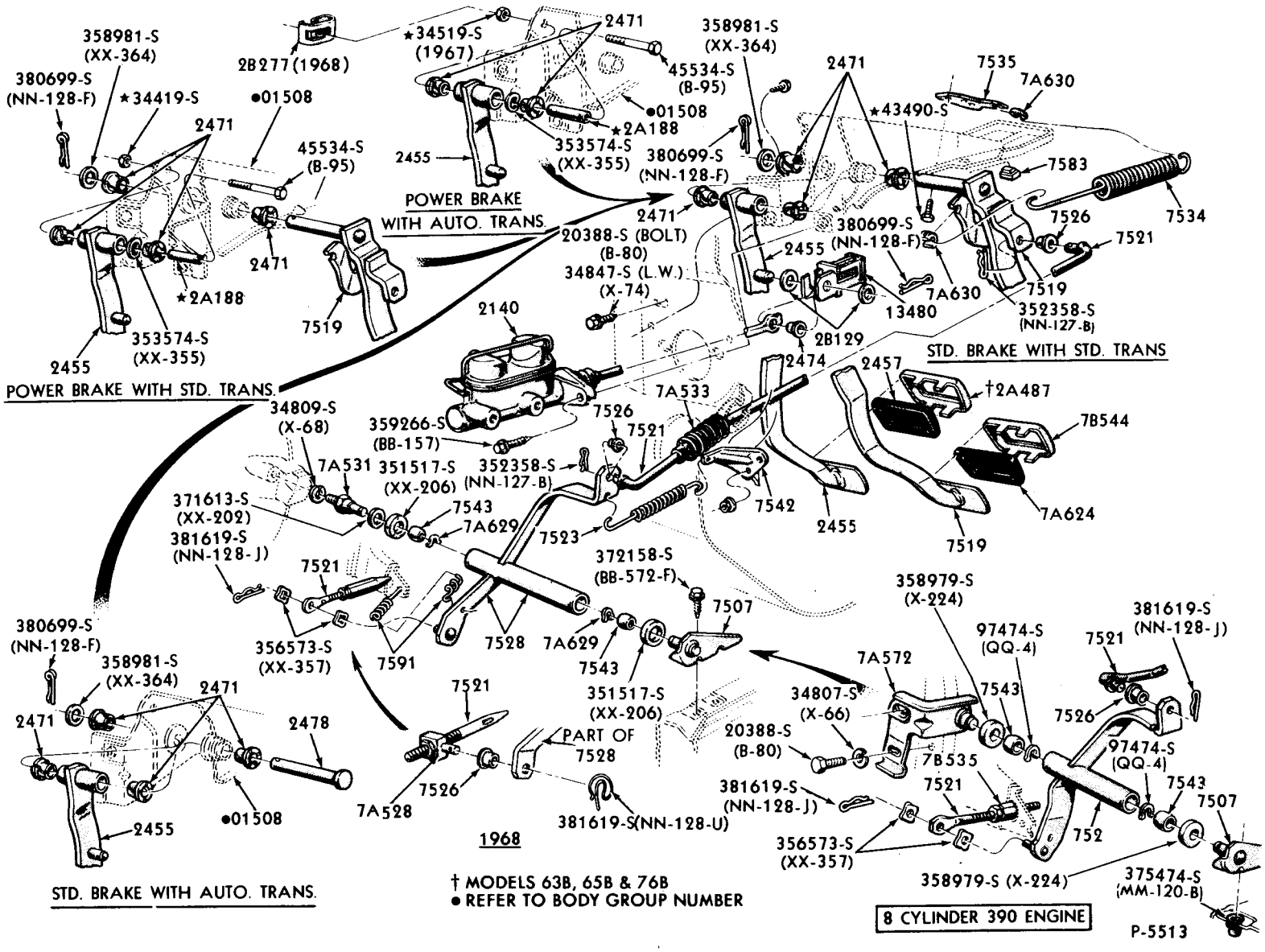

CLUTCH PEDAL and BRAKE PEDAL
1967/68 MUSTANG

COPYRIGHT © 1975 — FORD MOTOR COMPANY — DEARBORN, MICHIGAN

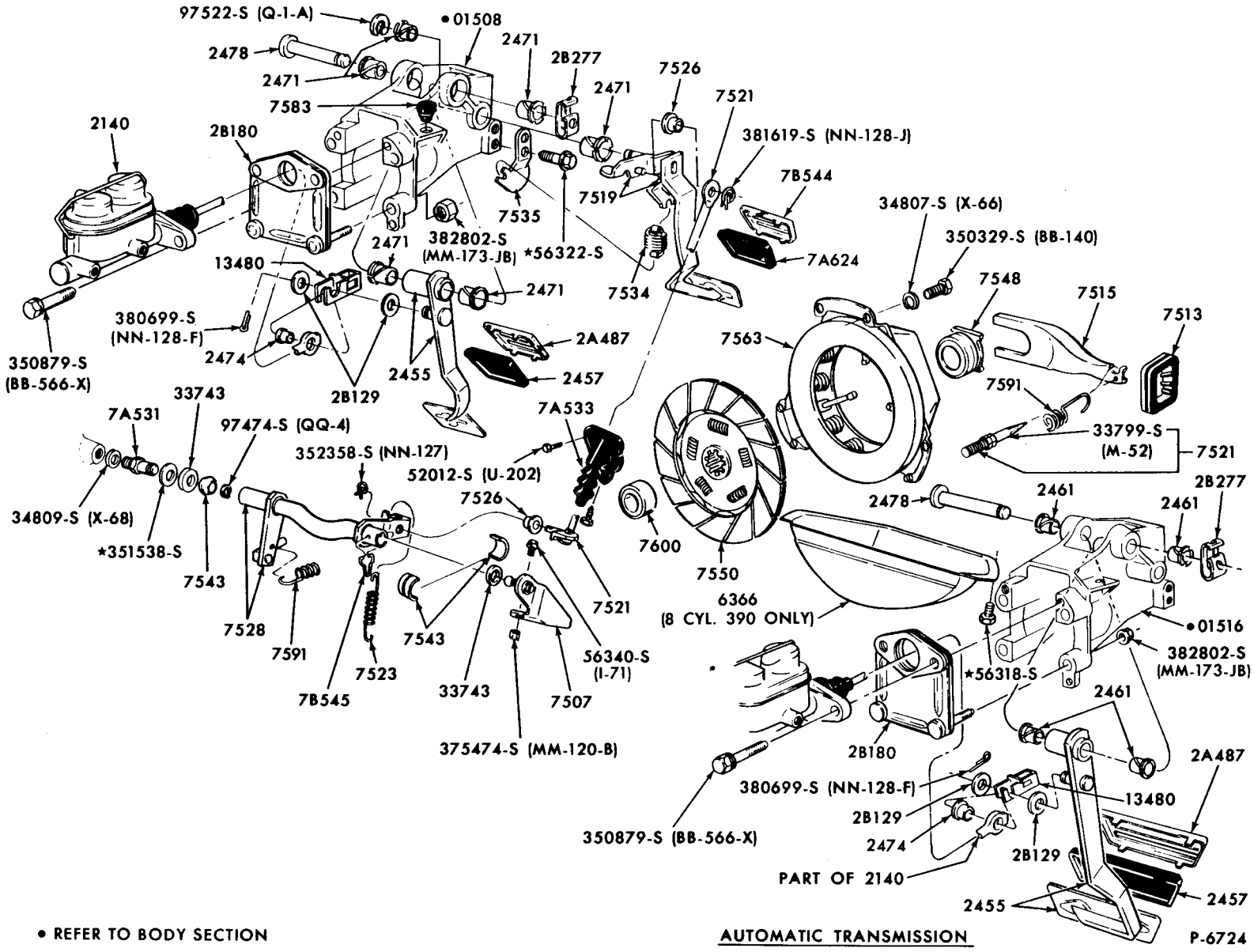

• REFER TO BODY SECTION

AUTOMATIC TRANSMISSION

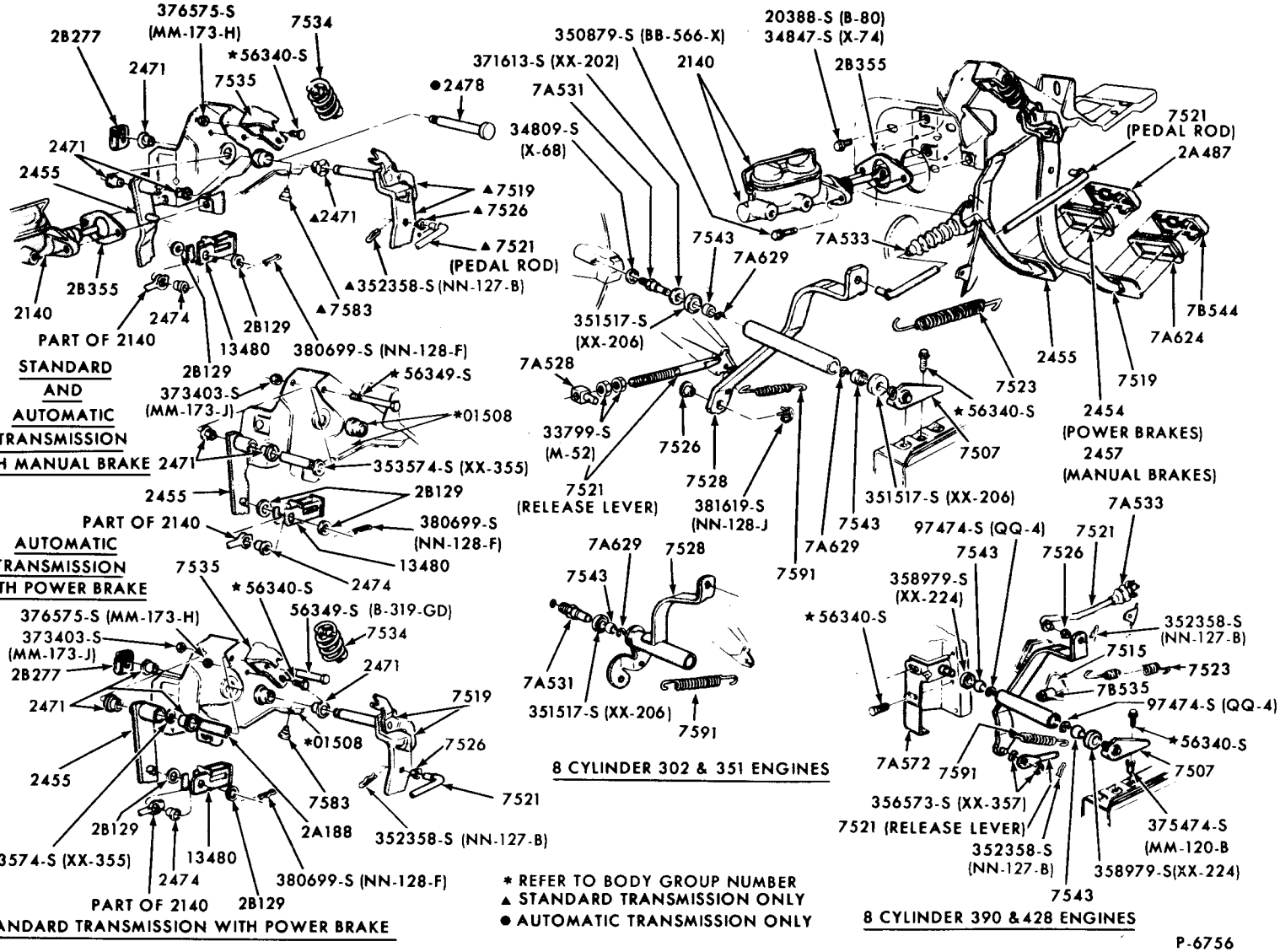

* REFER TO BODY GROUP NUMBER
▲ STANDARD TRANSMISSION ONLY
● AUTOMATIC TRANSMISSION ONLY

CLUTCH PEDAL and BRAKE PEDAL
1969/70 MUSTANG

COPYRIGHT © 1975 — FORD MOTOR COMPANY — DEARBORN, MICHIGAN

NO. 10

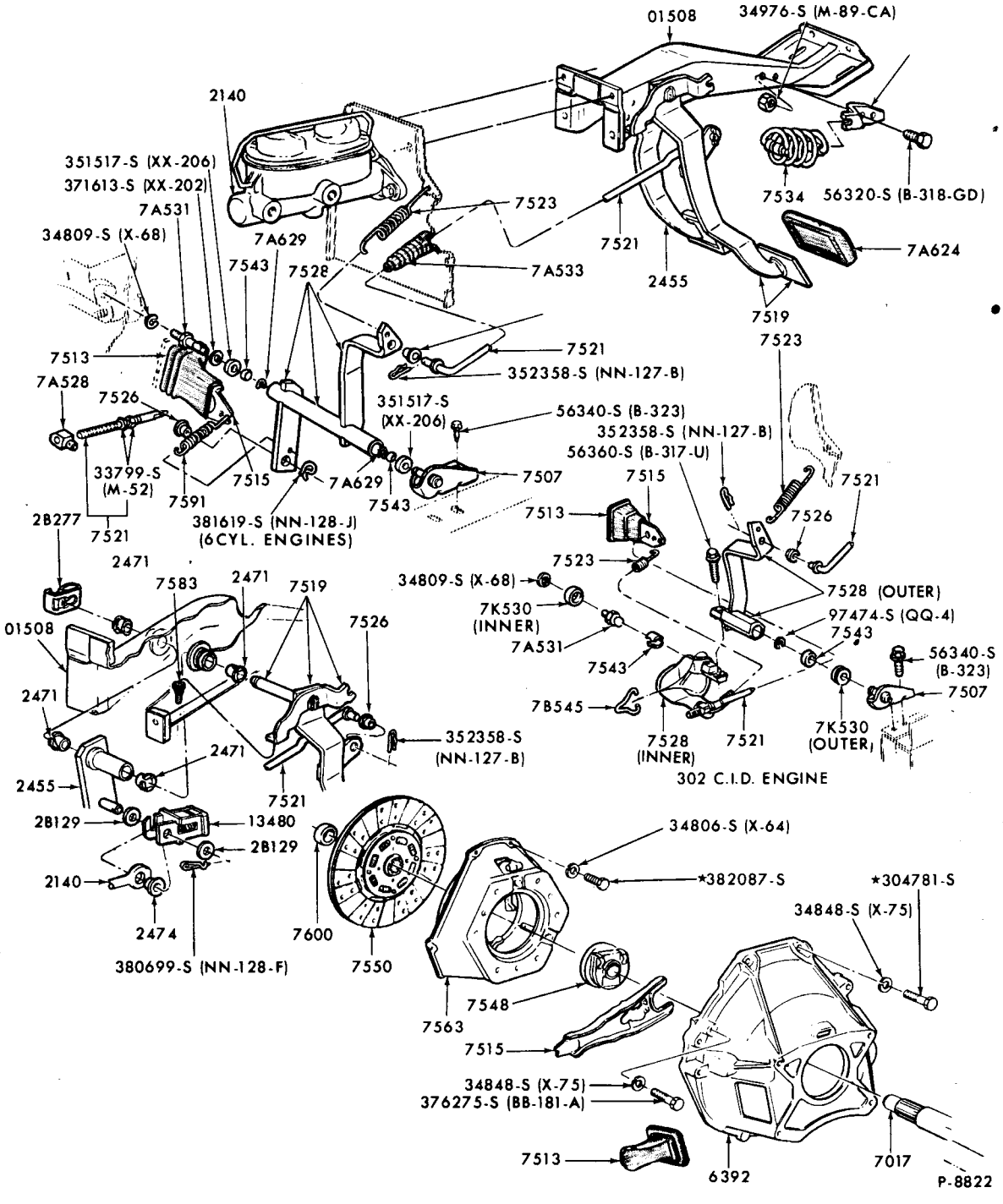

CLUTCH, CLUTCH PEDAL and BRAKE PEDAL
1970/72 MAVERICK

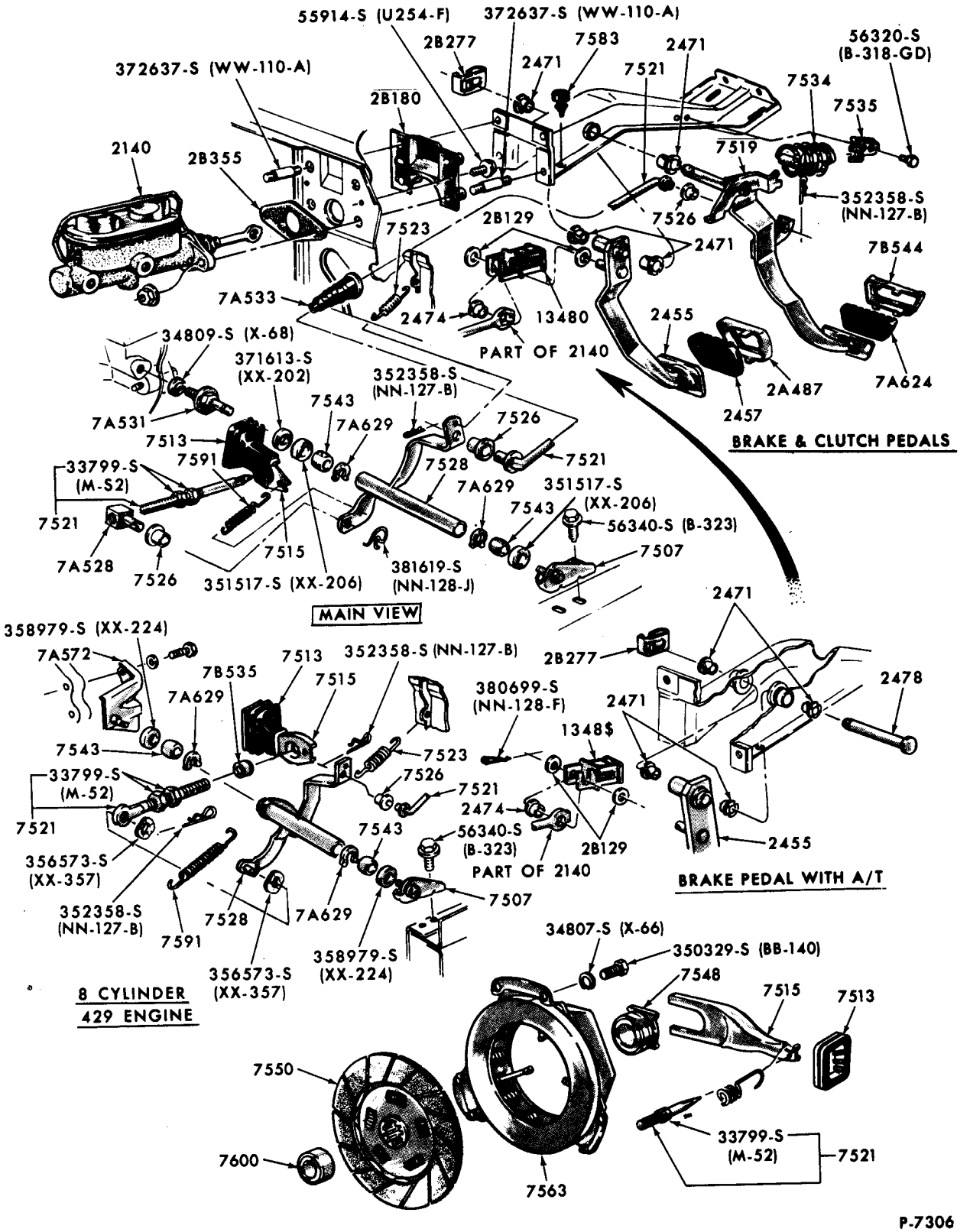

CLUTCH, CLUTCH PEDAL and BRAKE PEDAL
1970/71 FAIRLANE/TORINO

COPYRIGHT © 1975 — FORD MOTOR COMPANY — DEARBORN, MICHIGAN

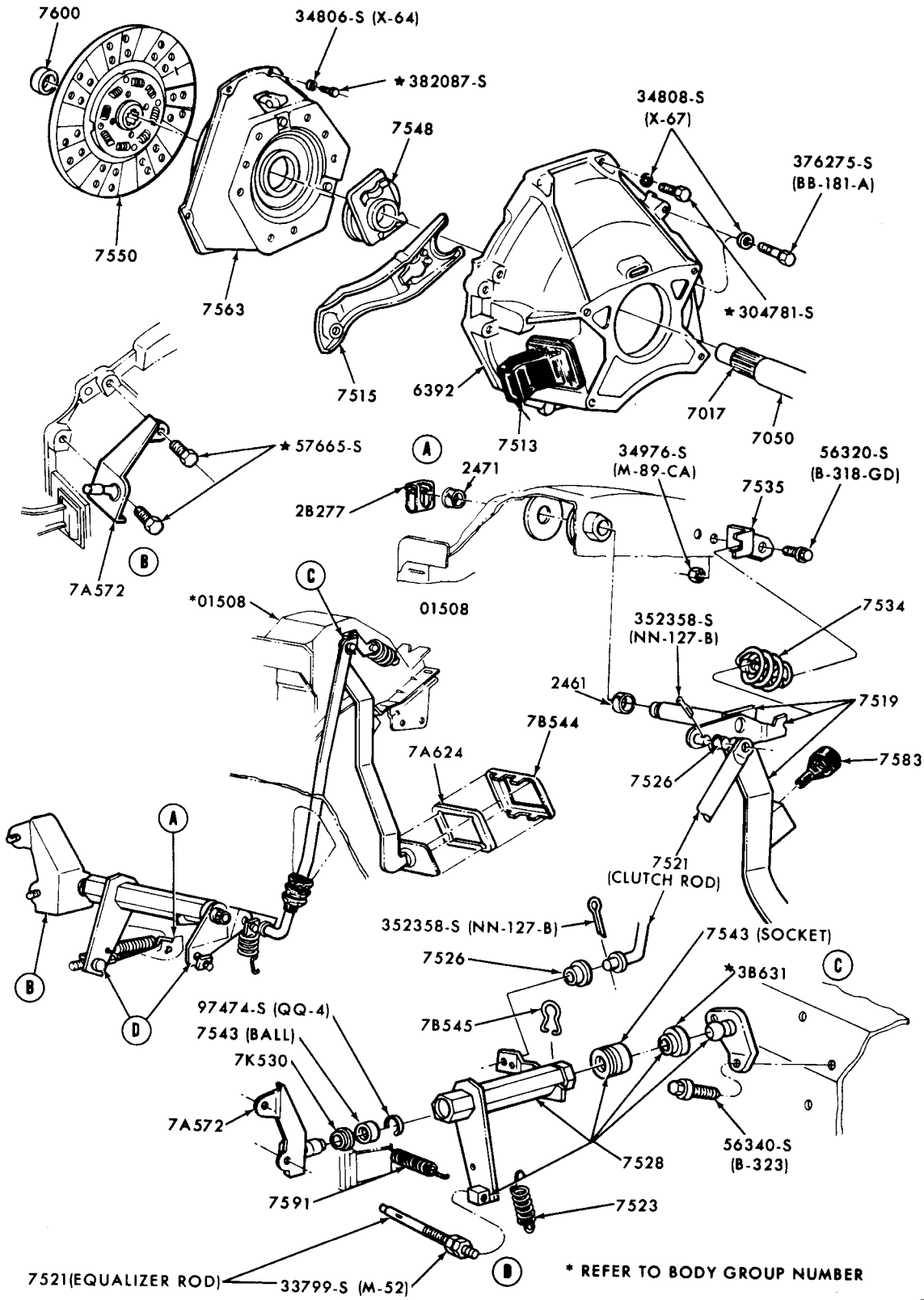

P-8144

CLUTCH and CLUTCH PEDAL
1971/72 MUSTANG

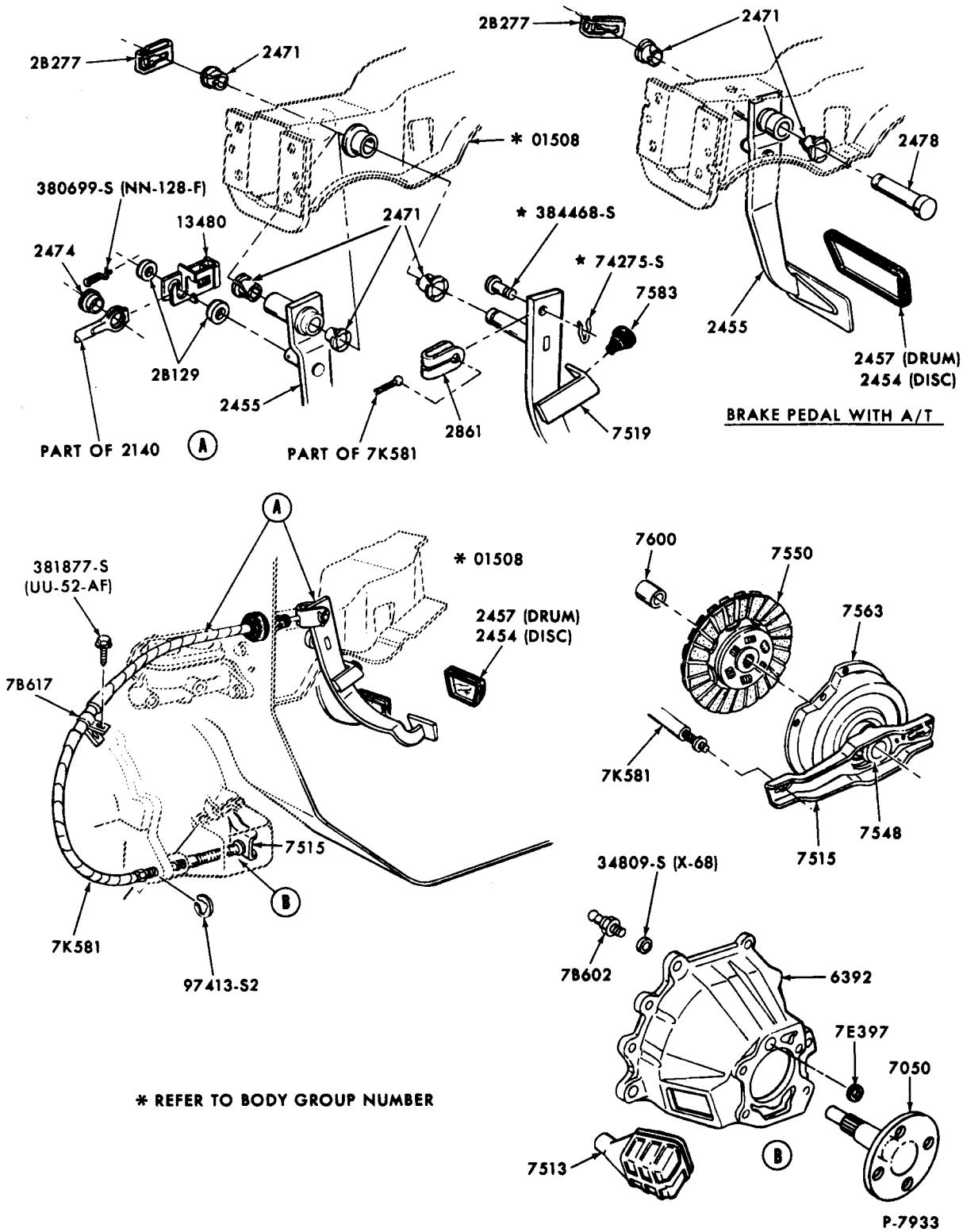

* REFER TO BODY GROUP NUMBER

CLUTCH, CLUTCH PEDAL and BRAKE PEDAL
1971/72 PINTO

COPYRIGHT © 1975 — FORD MOTOR COMPANY — DEARBORN, MICHIGAN

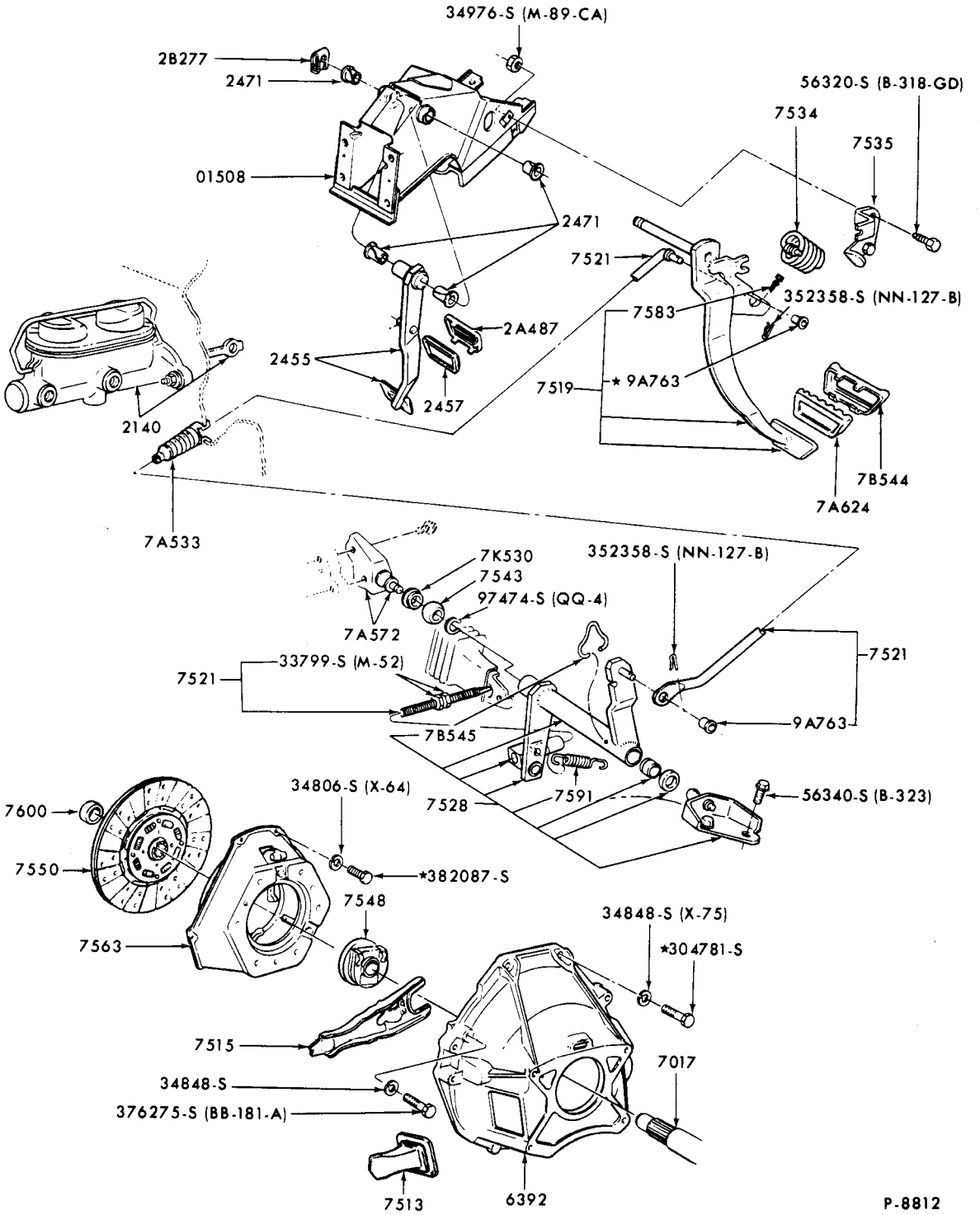

CLUTCH and CLUTCH PEDAL
1972 TORINO