INDEX

YEAR	TITLE	ILLUS. NO.	SECTION	PAGE
	ALTERNATOR			
1965/67	Alternator (Leece Neville 15 volt-60, 65 amp)	P-3843	100	2
1965/67	Alternator (Leece Neville 15 volt-40, 53 amp.)	P-3849	100	3
1965/70	Alternator (Leece Neville 15 volt 53, 60, 65 amp.)	P-5741	100	4
1965/72	Alternator (Ford 15 volt-38, 42, 45, 55, 60 amp.)	P-4508	100	5
1967/72	Alternator (Ford 15 volt-65 amp.)	P-5394	100	6
1969/70	Alternator (Ford 15 volt-55 amp.)-Integral Type (Thunderbird)	P-6461	100	7
1972	Alternator (Motorcraft 15 volt 70 amp.)	P-10328	100	10
	BATTERY CARRIER			
1965/68	Battery Carrier and Related Parts (Mustang)	P-4459	106.1	1
1965	Battery Carrier and Related Parts (Falcon)	P-3106	106.1	1
	INSTRUMENT PANEL CLUSTER			
	A (FORD)			
1965/66	Instrument Cluster and Related Parts	P-8991	106	1
1967	Instrument Cluster and Related Parts	P-8993	106	7
1968	Instrument Cluster and Related Parts	P-5993	106	10
1969/70	Instrument Cluster and Related Parts	P-6652	106	14
1971/72	Instrument Cluster and Related Parts	P-8095	106	18
	B (FAIRLANE/TORINO)			
1965	Instrument Cluster and Related Parts	P-8989	106	2
1966/67	Instrument Cluster and Related Parts	P-8977	106	6
1968/69	Instrument Cluster and Related Parts	P-6188	106	11
1970/71	Instrument Cluster and Related Parts	P-7079	106	17
1972	Instrument Cluster - w/Rallye Instrumentation Group	P-8768	106	21
1972	Instrument Cluster - w/o Rallye Instrumentation Group	P-8769	106	22
	F (MUSTANG)			
1965	Instrument Cluster and Related Parts - w/Warning Lights	P-8985	106	4
1965/66	Instrument Cluster and Related Parts - w/Gauges	P-8973	106	3
1967/68	Instrument Cluster and Related Parts	P-8975	106	8
1969/70	Instrument Cluster and Related Parts	P-6658	106	15
1971/72	Instrument Cluster and Related Parts	P-8205	106	19
1971/72	Auxiliary instrument cluster-w/gauges	P-10207	106	16
	L (PINTO)			
1971/72	Instrument Cluster and Related Parts	P-8035	106	20
	P (MAVERICK)			
1970/72	Instrument Cluster and Related Parts	P-6849	106	16
	S (THUNDERBIRD)			
1965/66	Instrument Cluster and Related Parts	P-8983	106	5
1967	Instrument Cluster and Related Parts	P-8979	106	9
1968/71	Instrument Cluster and Related Parts	P-6035	106	12
1972	Instrument Cluster and Related Parts	P-8766	106	23
	X (FALCON)			
1965	Instrument Cluster and Related Parts	P-8995	106	2
1966/67	Instrument Cluster and Related Parts	P-8987	106	7
1968/70	Instrument Cluster and Related Parts	P-6187	106	13
	U (BRONCO)			
1966/67	Instrument Cluster and Related Parts	P-8981	106	6
1968/72	Instrument Cluster and Related Parts	P-8997	106	8

COPYRIGHT © 1975 — FORD MOTOR COMPANY — DEARBORN, MICHIGAN

INDEX

YEAR	TITLE	ILLUS. NO.	SECTION	PAGE
	DISTRIBUTOR			
1965/69	Distributor (6 cylinder 170,200 engines)	P-2961	120	3
1965/67	Distributor (6 cylinder 240 engine)	P-3475	120	4
1969/71	Distributor (6 cylinder 250 engine)	P-5825	120	7
1972	Distributor (6 cylinder 170,200, 240, 250 engines)	P-10451	120	13
1965/67	Distributor (8 cylinder)(Pivot Plate Type-exc. with Stamped Weights)	P-2926	120	5
1965/71	Distributor (8 cylinder) (with Stamped Weights)	P-4924	120	6
1971/72	Distributor (4 cylinder 98 engine)	P-7617	120	10
1971/72	Distributor (4 cylinder 122 O. H. C. engine)	P-9029	120	9
1972	Distributor-single point (8 cylinder)	P-9288	120	11
1972	Distributor-dual point (8 cylinder)	P-10590	120	12
	DISTRIBUTOR MODULATOR SYSTEM			
1970	Distributor Modulator-6 cylinder 240 engines (Ford)	P-7564	120.1	1
1970	Distributor Modulator-8 cylinder 302 engine (Ford)	P-7563	120.1	2
1970	Distributor Modulator-8 cylinder 390 engine (Ford)	P-7565	120.1	3
1971	Distributor Modulator-6 cylinder 240 engine (Ford)	P-8454	120.1	10
1970	Distributor Modulator-8 cylinder 302 engine (Fairlane/Torino)	P-7557	120.1	4
1970	Distributor Modulator-8 cylinder 351-4V engine-w/o Ram Air (Fairlane/ Torino)	P-7559	120.1	5
1970	Distributor Modulator-8 cylinder 351-4V engine-Ram Air (Fairlane/Torino)	P-7558	120.1	6
1971	Distributor Modulator-6 cylinder 250 engine (Torino)	P-8455	120.1	11
1970	Distributor Modulator-8 cylinder 302 engine (Mustang)	P-7560	120.1	7
1970	Distributor Modulator-8 cylinder 351-4V engine-Ram Air (Mustang)	P-7561	120.1	8
1970	Distributor Modulator-8 cylinder 351-4V engine-w/o Ram Air (Mustang)	P-7562	120.1	9
1971	Distributor Modulator-6 cylinder 250 engine (Mustang)	P-8453	120.1	13
1971	Distributor Modulator-6 cylinder 170,200,250 engines (Maverick)	P-8451	120.1	14
1971	Distributor Modulator-8 cylinder 429 engine (Thunderbird)	P-8452	120.1	12
1970	Distributor Modulator - 8 cylinder 302 engine (Falcon)	P-7557	120.1	4
	DISTRIBUTOR VACUUM HOSES			
1969/72	Distributor Vacuum Hose Installation-6 cylinder 170 engine (Bronco)	P-8373	120.4	1
1970/72	Distributor Vacuum Hose Installation-8 cylinder 302 engine (Bronco)	P-8382	120.4	1
	ELECTRONIC SPARK CONTROL SYSTEM (E.S.C.)			
1972	Electronic Spark Control System (E.S.C.)-8 cylinder 302-2V engine (Ford)	P-9048	120.2	8
1972	Electronic Spark Control System (E.S.C.)-8 cylinder 351-W-2V engine (Ford)	P-9051	120.2	10
1972	Electronic Spark Control System (E.S.C.-8 cylinder, 351-C-2V, 400-2V engine (Ford)	P-9056	120.2	15
1972	Electronic Spark Control System (E.S.C.)-6 cylinder 250 engine (Torino)	P-9042	120.2	2
1972	Electronic Spark Control System (E.S.C.)-8 cylinder 302-2V engine (Torino)	P-9047	120.2	7
1972	Electronic Spark Control System (E.S.C.)-8 cylinder 351-4V engine w/Ram Air (Torino)	P-9052	120.2	11
1972	Electronic Spark Control System (E.S.C.)-8 cylinder 351-4V engine w/o Ram Air (Torino)	P-9054	120.2	13
1972	Electronic Spark Control System (E.S.C.)-8 cylinder 351-2V,400-2V engine (Torino)	P-9057	120.2	16
1972	Electronic Spark Control System (E.S.C.)-6 cylinder 250 engine (Mustang)	P-9043	120.2	3
1972	Electronic Spark Control System (E.S.C.)-8 cylinder 302-2V engine (Mustang)	P-9046	120.2	6
1972	Electronic Spark Control System (E.S.C.)-8 cylinder 351-4V engine w/Ram Air (Mustang)	P-9050	120.2	9
1972	Electronic Spark Control System (E.S.C.)-8 cylinder 351-4V engine w/o Ram Air (Mustang)	P-9053	120.2	12
1972	Electronic Spark Control System (E.S.C.)-4 cylinder 122 engine (Pinto)	P-9041	120.2	1
1972	Electronic Spark Control System (E.S.C.)-6 cylinder 170,200,250 engines (Maverick)	P-9044	120.2	4
1972	Electronic Spark Control System (E.S.C.)-8 cylinder 302-2V engine (Maverick)	P-9045	120.2	5
1972	Electronic Spark Control System (E.S.C.)-8 cylinder 400-2V engine (Thunderbird)	P-9055	120.2	14
1972	Electronic Spark Control System (E.S.C.)-8 cylinder 429, 460 engine (Thunderbird)	P-9058	120.2	17

INDEX

YEAR	TITLE	ILLUS. NO.	SECTION	PAGE
	ENGINE GOVERNOR			
1969/71	Engine Governor Transistorized - 428, 429CJ & SCJ engines (Fairlane/Torino)	P-7589	120	8
1969/72	Engine Governor Transistorized - 302, 428, 429CJ & SCJ engines (Mustang)	P-7589	120	8
	GENERATOR			
1965	Generator and Related Parts (Ford 15 volt-25, 30 amp.)-Mustang	P-3192	100	1
	IGNITION WIRING			
1965	Transistorized Ignition System, Oil Temperature Warning System and Related Parts (8 cylinder 427 engine)(Ford)	P-4190	120	1
1965/66	Transistorized Ignition System and Related Parts (8 cylinder 390, 428 engines)(Thunderbird)	P-4868	120	2
	STARTER			
1965/72	Starter and Drive Assy.-Positive Engagement	P-3191	110	2
1965/72	Starter Drive (Ford 12 Volt-Positive Engagement)	P-5526	110	1
1968/72	Starter and Solenoid (Ford 12 Volt-Positive Engagement)	P-5952	110	3
	VOLTAGE REGULATOR			
1965	Voltage Regulator-Typical (Generator)	P-1535	100	8
1965/72	Voltage Regulator (Ford 15 volt, Negative Ground)(Alternator)	P-5525	100	9
	WARNING INDICATORS			
	A (FORD)			
1965/66	Warning Indicator Panel Installation (Ford)	P-5276	106.1	2
1966	Seat Belt and Parking Brake Warning Lamp Installation (Ford)	P-5275	106.1	5
1967	Warning Indicator Panel Installion (Ford)	P-5716	106.1	8
1968	Warning Indicator Panel and Wiring System (Ford)	P-6260	106.1	11
1969/70	Warning Indicator Panel and Wiring System (Ford)	P-6866	106.1	14
1971	Seat Belt and Parking Brake Warning Lamp Installation (Ford)	P-8438	106.1	16
1972	Seat Belt Warning System	P-9260	106.1	19
	B (FAIRLANE/TORINO), B(FALCON)-"From 1-2-70"			
1966/69	Seat Belt Warning Lamp Installation (Fairlane/Torino)	P-5278	106.1	6
1968/69	Warning Indicator Panel (Fairlane/Torino)	P-6247	106.1	12
1970/71	Warning Indicator Panel (Fairlane/Torino)	P-7675	106.1	15
1972	Seat Belt Warning System	P-9259	106.1	20
1972	Headlamp On Warning Indicator and Visibility Group Wiring (Torino)	P-9948	106.1	25
	F (MUSTANG)			
1967/68	Warning Indicator Panel Installation (Mustang)	P-5652	106.1	9
1966/68	Seat Belt Warning Lamp Installation (Mustang)	P-5278	106.1	6
1969/70	Seat Belt and Parking Brake Warning Lamp Installation (Mustang)	P-6869	106.1	13
1971/72	Warning Indicator System-Safety Convenience	P-8429	106.1	17
1971	Seat Belt Warning Lamp and Related Parts (Mustang)	P-8434	106.1	18
1972	Seat Belt Warning System	P-9266	106.1	21
	L (PINTO)			
1972	Seat Belt Warning System	P-9262	106.1	24
	S (THUNDERBIRD)			
1965	Seat Belt Warning Lamp Installation (Thunderbird) -Before 10/5/64	P-4405	106.1	3
1965/66	Seat Belt Warning Lamp Installation (Thunderbird)-From 10/5/64	P-5279	106.1	3
1965/66	Warning Indicator Panel and Wiring System - Door Ajar, Low Fuel, Flasher (Thunderbird)	P-4843	106.1	4
1966	Warning Lamp Installation-Roof Console Panel (Thunderbird-Body type 63C, 63D)	P-5139	106.1	7
1967/71	Warning Lamp Installation-Roof Console Panel (Thunderbird)	P-5658	106.1	10
1968/69	Monitor System - Tail Lamp Failure (Thunderbird)	P-6255	106.1	13
1972	Seat Belt Warning System	P-9264	106.1	22
	P (MAVERICK)			
1972	Seat Belt Warning System	P-9261	106.1	23
	X (FALCON) -"Before 1-2-70"-For Units Built From 1-2-70-Refer to B(FALCON)			
1968/70	Warning Indicator Panel (Falcon)	P-6247	106.1	12
1966/69	Seat Belt Warning Lamp Installation (Falcon)	P-5278	106.1	6

COPYRIGHT © 1975 — FORD MOTOR COMPANY — DEARBORN, MICHIGAN

INDEX

YEAR	TITLE	ILLUS. NO.	SECTION	PAGE
	TRANSMISSION REGULATED SPARK CONTROL SYSTEM (T.R.S.)			
1972	Transmission Regulated Spark Control System (T.R.S.)-6 cylinder 240 engine (Ford)	P-9064	120.3	5
1972	Transmission Regulated Spark Control System (T.R.S.)-8 cylinder 302-2V engine (Ford)	P-9065	120.3	6
1972	Transmission Regulated Spark Control System (T.R.S.)-8 cylinder 351-2V engine (Ford)	P-9071	120.3	12
1972	Transmission Regulated Spark Control System (T.R.S.)-8 cylinder 400-2V engine (Ford)	P-9074	120.3	15
1972	Transmission Regulated Spark Control System (T.R.S.)-6 cylinder 250 engine (Torino)	P-9062	120.3	3
1972	Transmission Regulated Spark Control System (T.R.S.)-8 cylinder 302-2V engine (Torino)	P-9068	120.3	9
1972	Transmission Regulated Spark Control System (T.R.S.)-8 cylinder 351-4V engine w/Ram Air (Torino)	P-9069	120.3	10
1972	Transmission Regulated Spark Control System (T.R.S.)-8 cylinder 351-4V engine w/o Ram Air (Torino)	P-9073	120.3	14
1972	Transmission Regulated Spark Control System (T.R.S.)-8 cylinder 351-2V, 400-2V engine (Torino)	P-9075	120.3	16
1972	Transmission Regulated Spark Control System (T.R.S.)-6 cylinder 250 engine (Mustang)	P-9063	120.3	4
1972	Transmission Regulated Spark Control System (T.R.S.)-8 cylinder 302-2V engine (Mustang)	P-9067	120.3	8
1972	Transmission Regulated Spark Control System (T.R.S.)-8 cylinder 351-2V engine (Mustang)	P-9076	120.3	17
1972	Transmission Regulated Spark Control System (T.R.S.)-8 cylinder 351-4V engine w/Ram Air (Mustang)	P-9070	120.3	11
1972	Transmission Regulated Spark Control System (T.R.S.)-8 cylinder 351-4V engine (Mustang) w/o Ram Air (Mustang)	P-9072	120.3	13
1972	Transmission Regulated Spark Control System (T.R.S.)-4 cylinder 122 engine (Pinto)	P-9060	120.3	1
1972	Transmission Regulated Spark Control System (T.R.S.)-6 cylinder 170,200,250 engines (Maverick)	P-9061	120.3	2
1972	Transmission Regulated Spark Control System (T.R.S.)-8 cylinder 302-2V engine (Maverick)	P-9066	120.3	7

GENERATOR and RELATED PARTS (FORD 15 VOLT - 25, 30 AMP.)
1965 MUSTANG

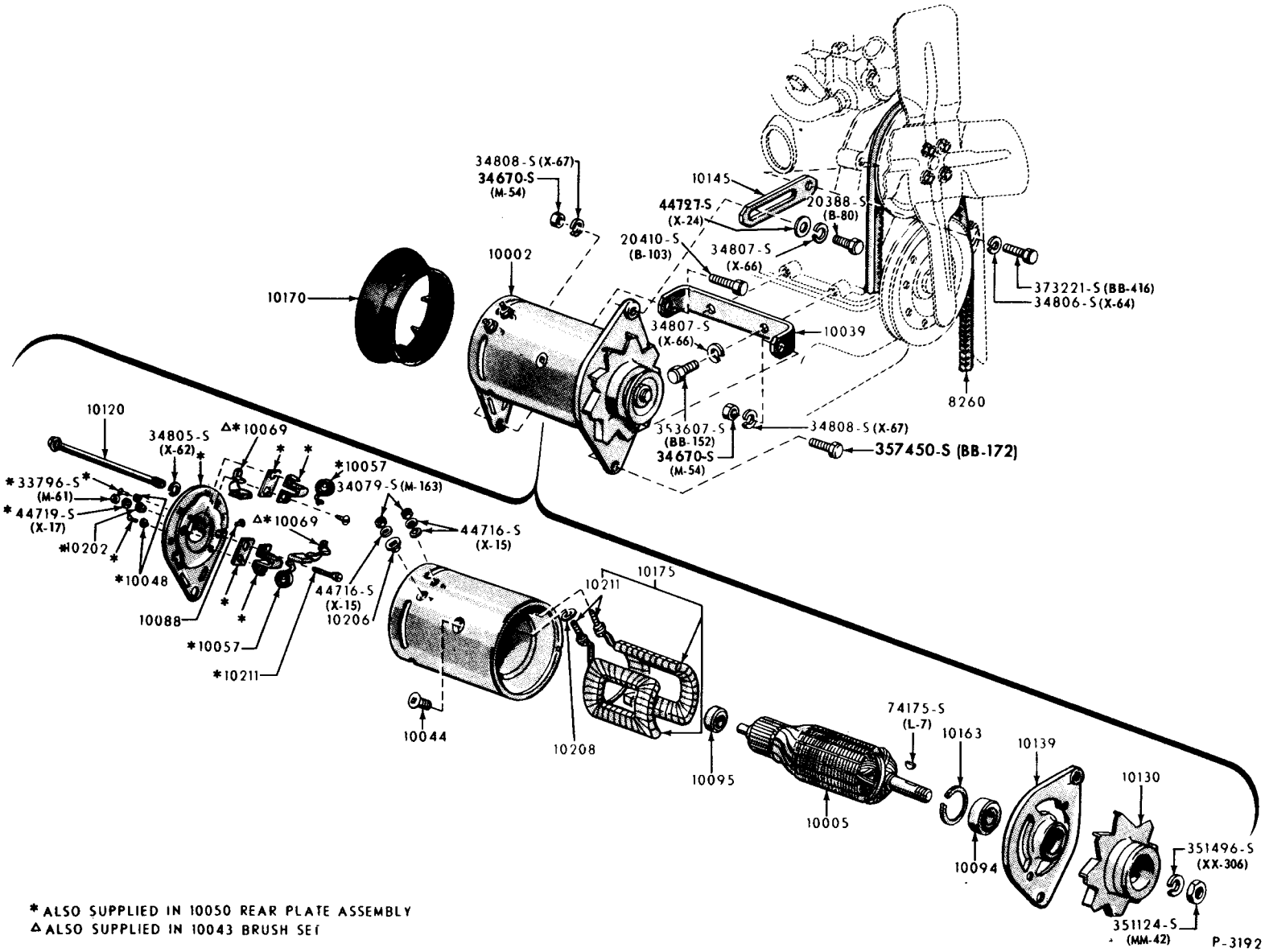

*ALSO SUPPLIED IN 10050 REAR PLATE ASSEMBLY
ΔALSO SUPPLIED IN 10043 BRUSH SET

COPYRIGHT © 1975 — FORD MOTOR COMPANY — DEARBORN, MICHIGAN

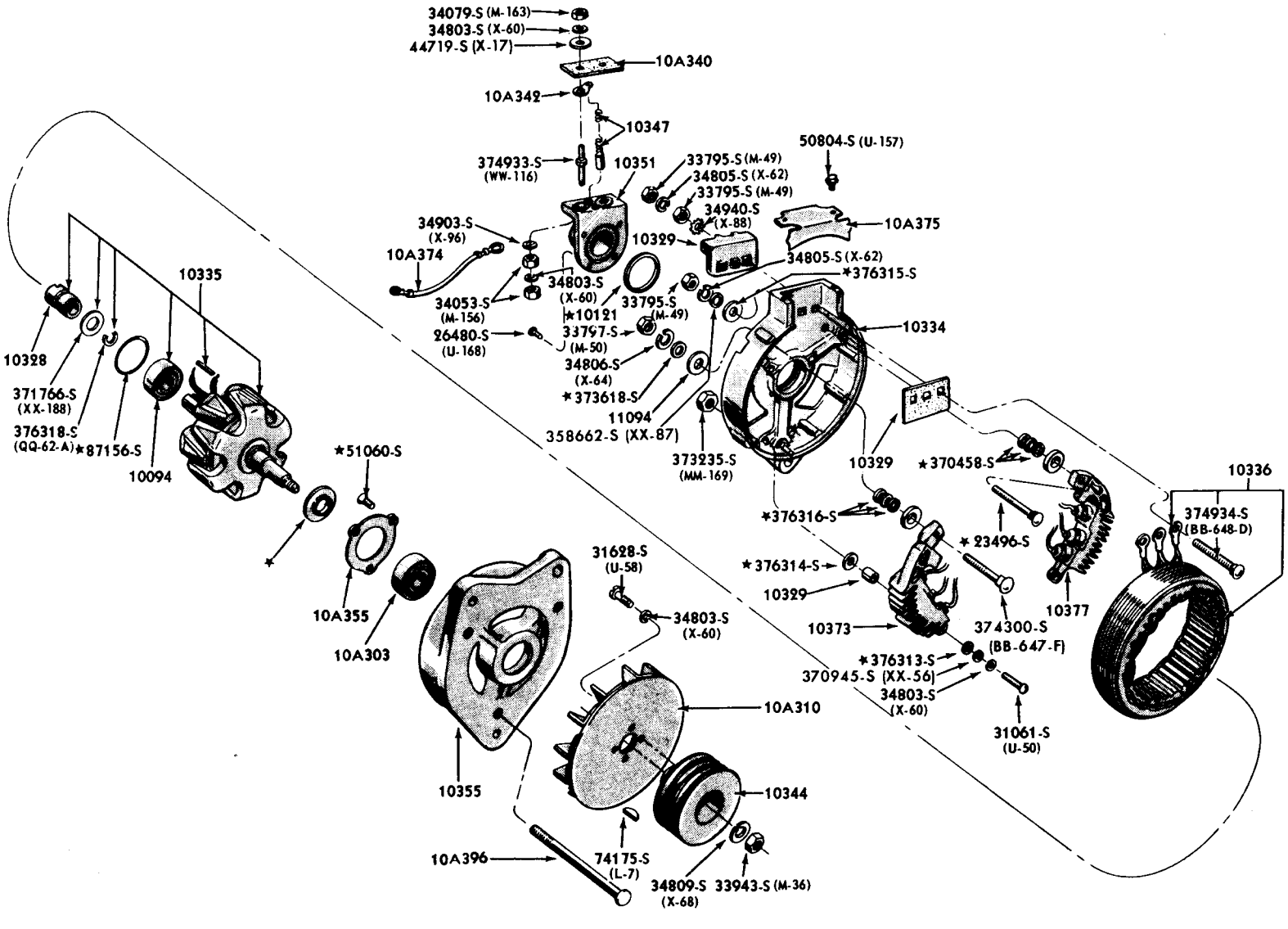

ALTERNATOR (LEECE NEVILLE 15 VOLT - 60, 65 A.MP.)

1965/67

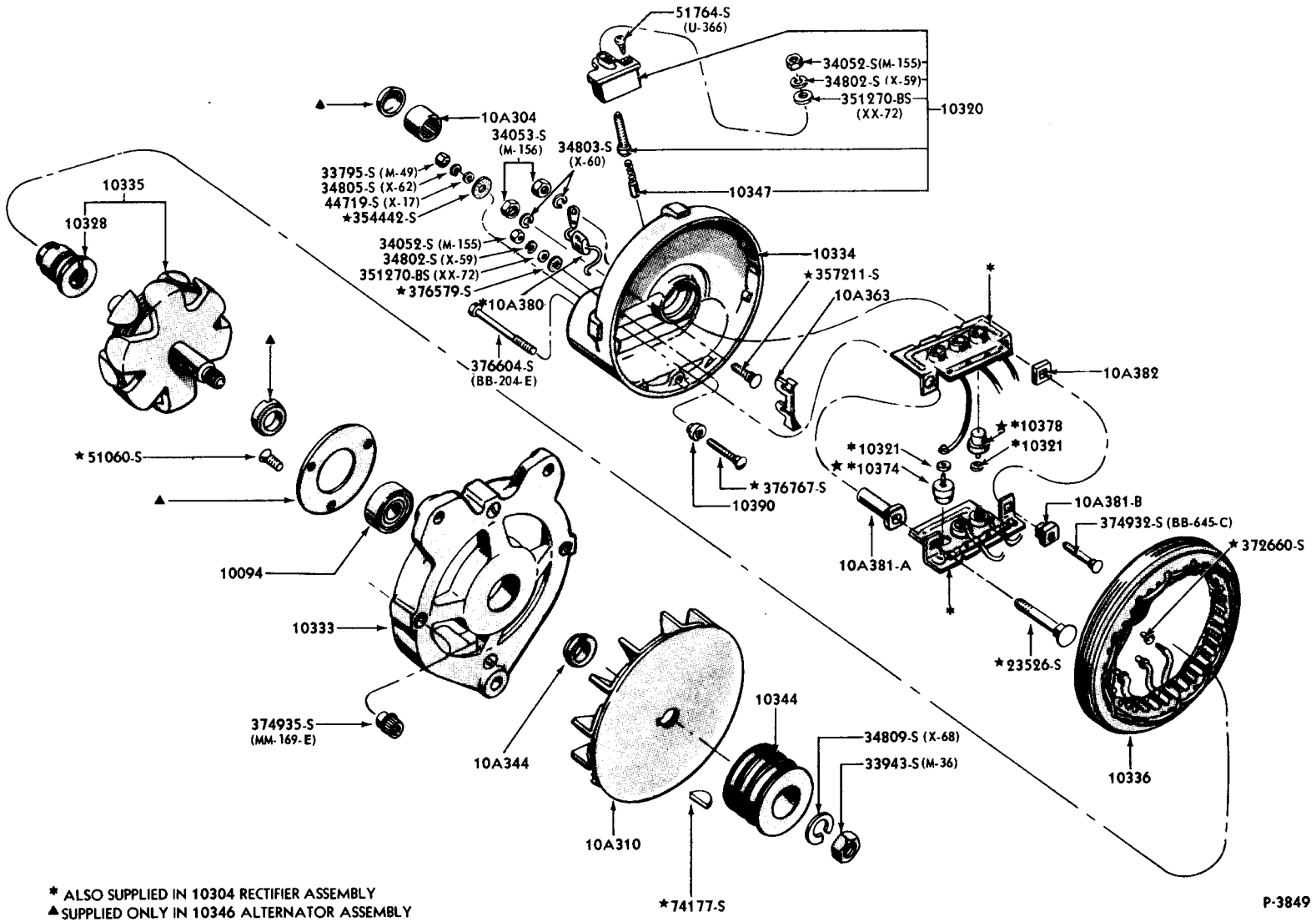

* ALSO SUPPLIED IN 10304 RECTIFIER ASSEMBLY
▲SUPPLIED ONLY IN 10346 ALTERNATOR ASSEMBLY

ALTERNATOR (LEECE NEVILLE 15 VOLT - 40,53 AMP.)
1965/67

COPYRIGHT © 1975 — FORD MOTOR COMPANY — DEARBORN, MICHIGAN

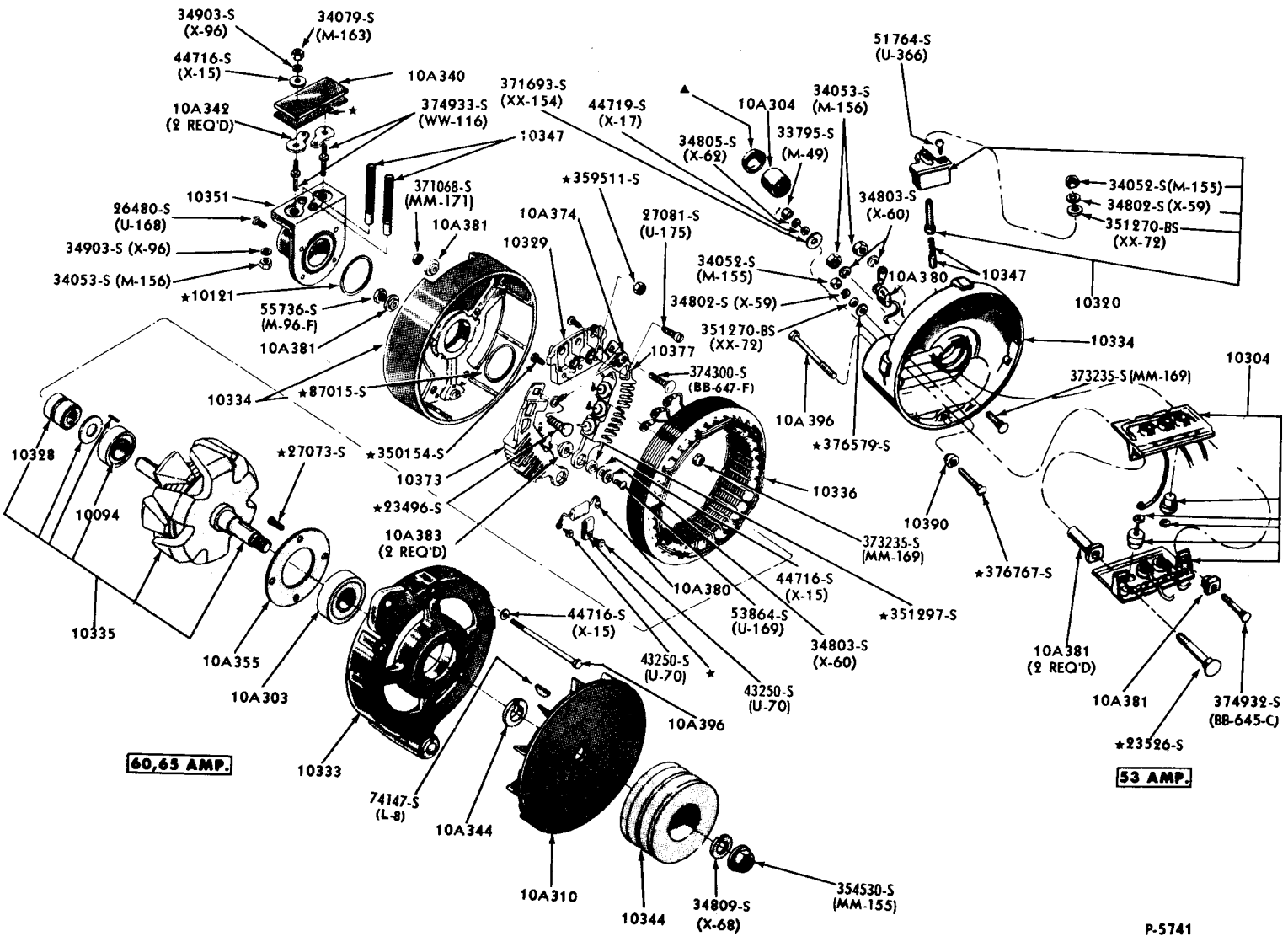
34903-S (X-96)
34079-S (M-163)
44716-S (X-15)
10A340
10A342 (2 REQ'D)
374933-S (WW-116)
10347
371693-S (XX-154)
44719-S (X-17)
10A304
34053-S (M-156)
51764-S (U-366)
34805-S (X-62)
33795-S (M-49)
10351
26480-S (U-168)
34903-S (X-96)
34053-S (M-156)
★10121
371068-S (MM-171)
10A381
★359511-S
10A374
27081-S (U-175)
10329
34803-S (X-60)
34052-S (M-155)
34802-S (X-59)
351270-BS (XX-72)
34052-S (M-155)
34802-S (X-59)
351270-BS (XX-72)
10A380
10347
10320
55736-S (M-96-F)
10A381
10377
374300-S (BB-647-F)
10334
★87015-S
10334
373235-S (MM-169)
10304
10A396
★376579-S
10328
★27073-S
★350154-S
10373
★23496-S
10336
10094
10A383 (2 REQ'D)
373235-S (MM-169)
10390
★376767-S
44716-S (X-15)
10A380
53864-S (U-169)
★351297-S
44716-S (X-15)
34803-S (X-60)
10335
10A355
10A303
43250-S (U-70)
43250-S (U-70)
10A396
10A381 (2 REQ'D)
10A381
374932-S (BB-645-C)
★23526-S
60,65 AMP.
53 AMP.
10333
74147-S (L-8)
10A344
10A310
10344
34809-S (X-68)
354530-S (MM-155)
P-5741

ALTERNATOR (FORD 15 VOLT - 38,42,45,55,60,61 AMP.)
1965/72

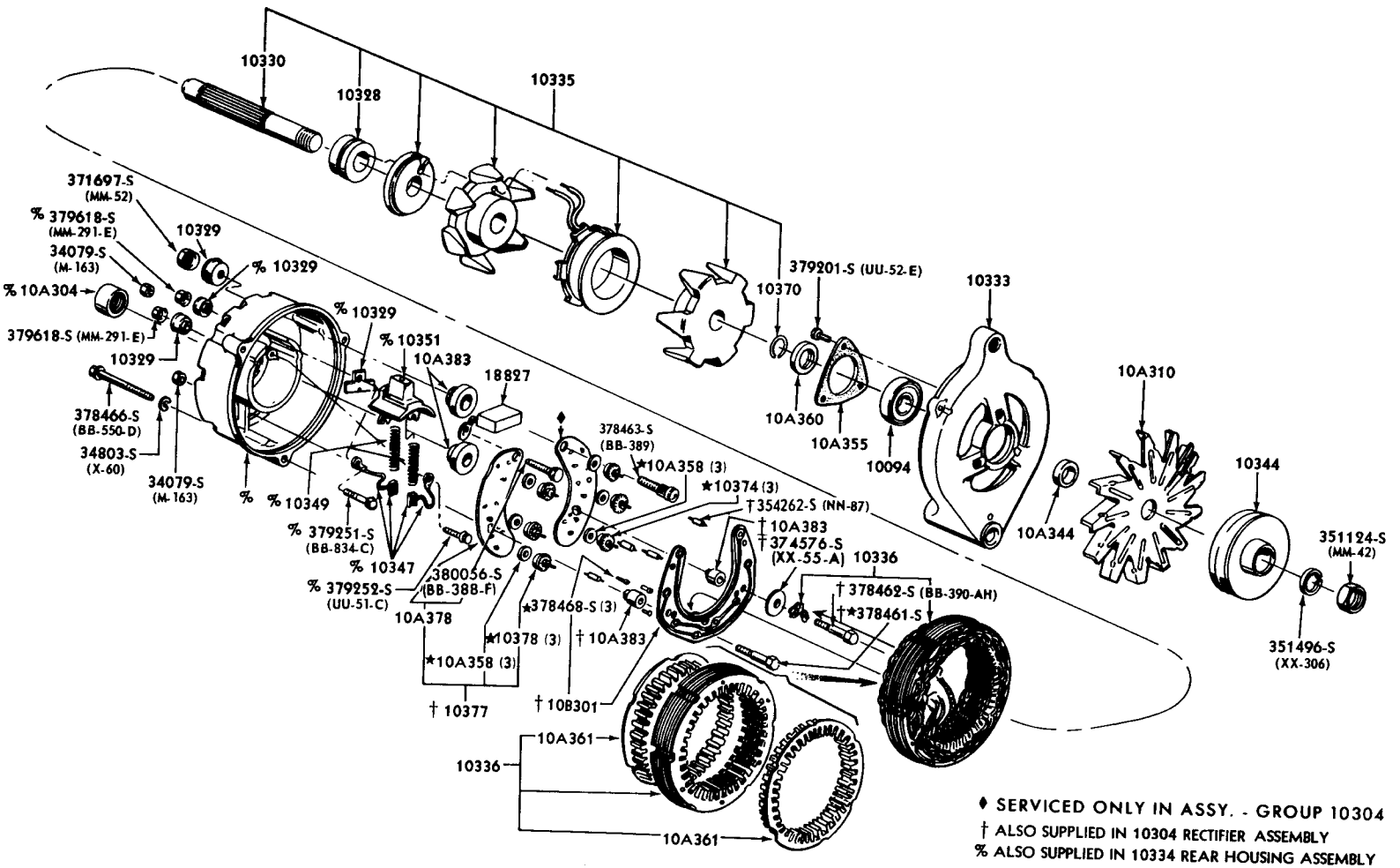

♦ SERVICED ONLY IN ASSY. - GROUP 10304
† ALSO SUPPLIED IN 10304 RECTIFIER ASSEMBLY
% ALSO SUPPLIED IN 10334 REAR HOUSING ASSEMBLY

P-4508

COPYRIGHT © 1975 — FORD MOTOR COMPANY — DEARBORN, MICHIGAN

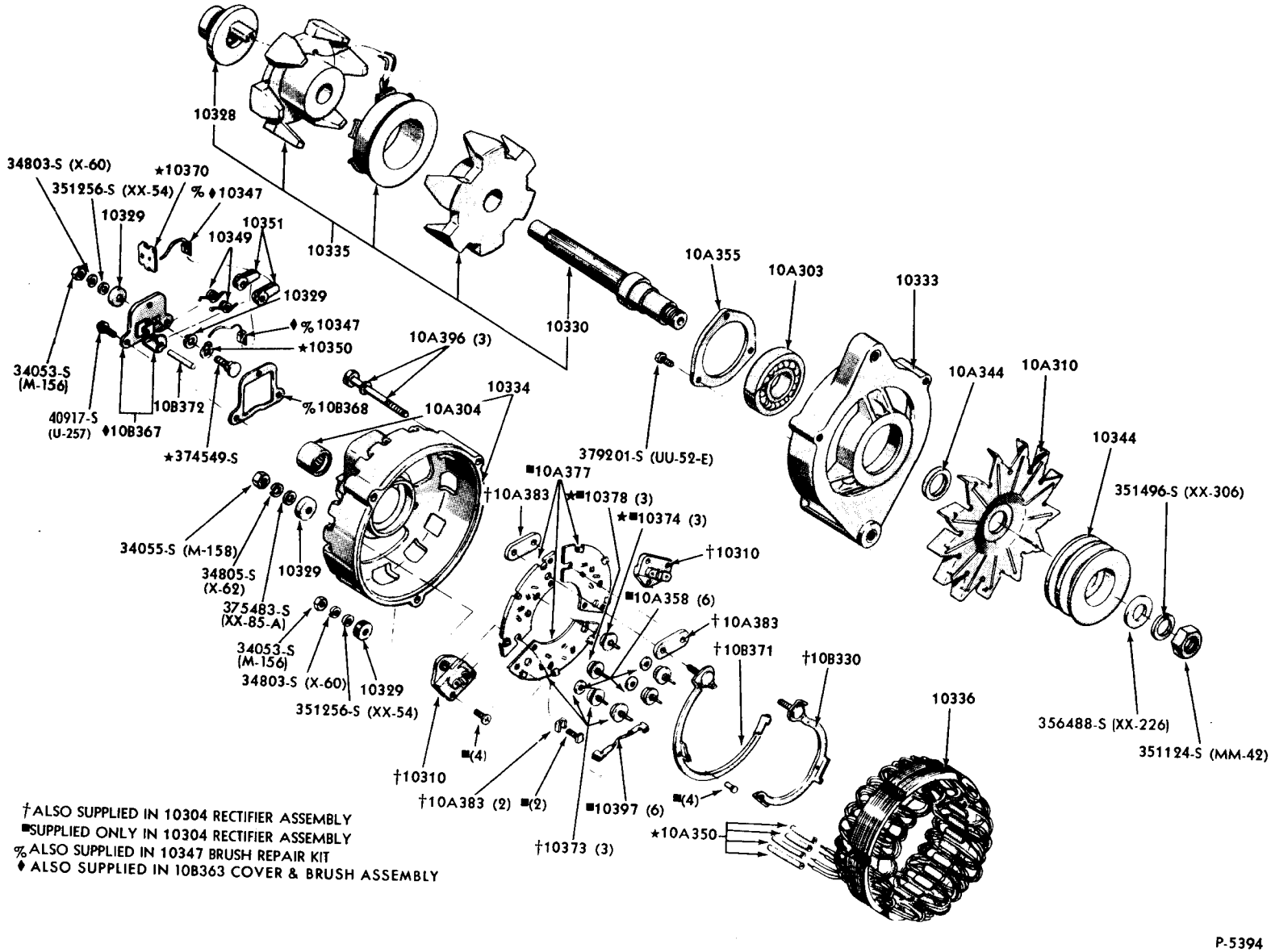

† ALSO SUPPLIED IN 10304 RECTIFIER ASSEMBLY
■ SUPPLIED ONLY IN 10304 RECTIFIER ASSEMBLY
% ALSO SUPPLIED IN 10347 BRUSH REPAIR KIT
♦ ALSO SUPPLIED IN 10B363 COVER & BRUSH ASSEMBLY

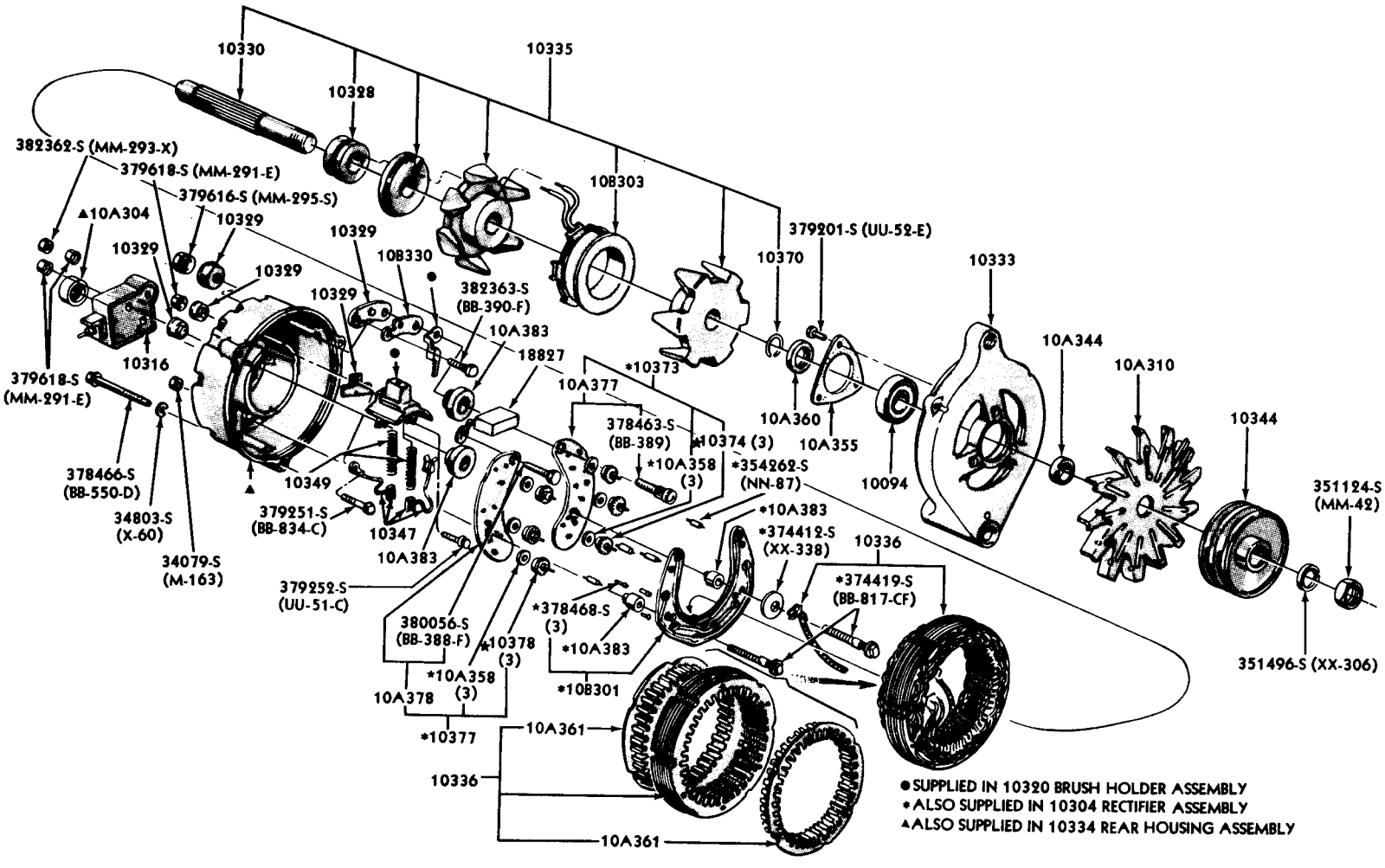

ALTERNATOR (15 VOLT 55 AMP.) - INTEGRAL TYPE

1969/70 THUNDERBIRD

COPYRIGHT © 1975— FORD MOTOR COMPANY —DEARBORN, MICHIGAN

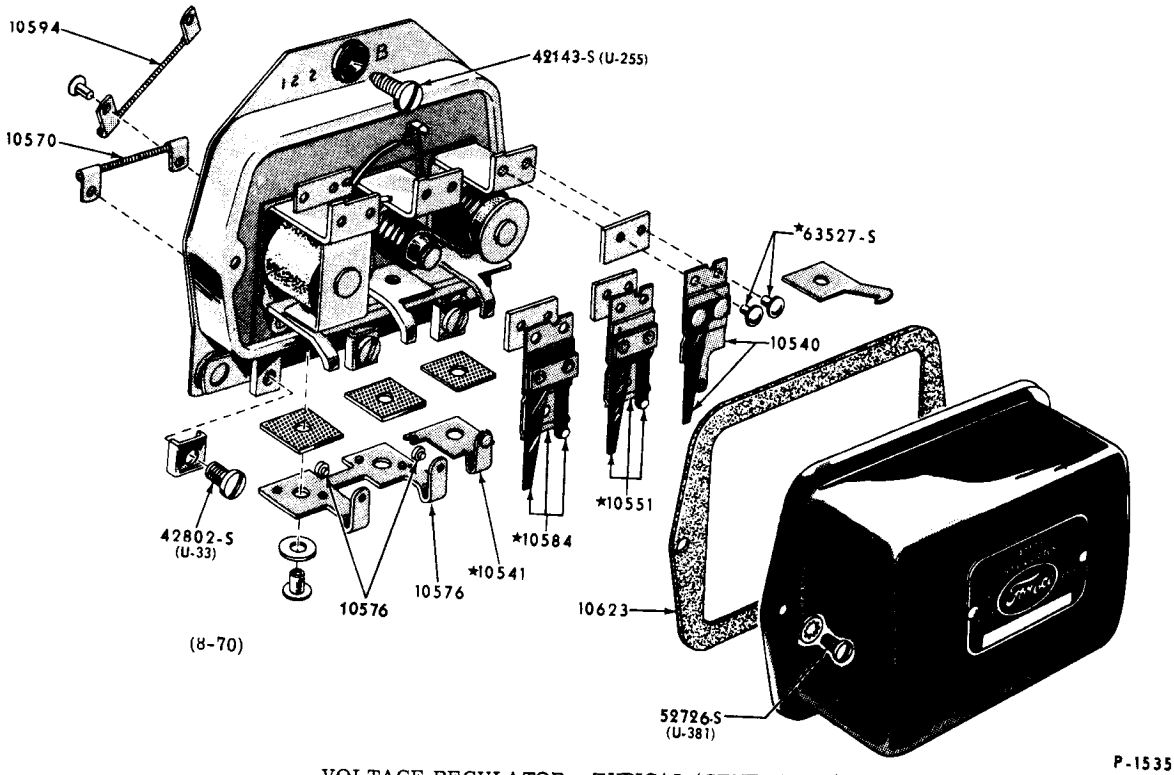

VOLTAGE REGULATOR - TYPICAL (GENERATOR)
1965

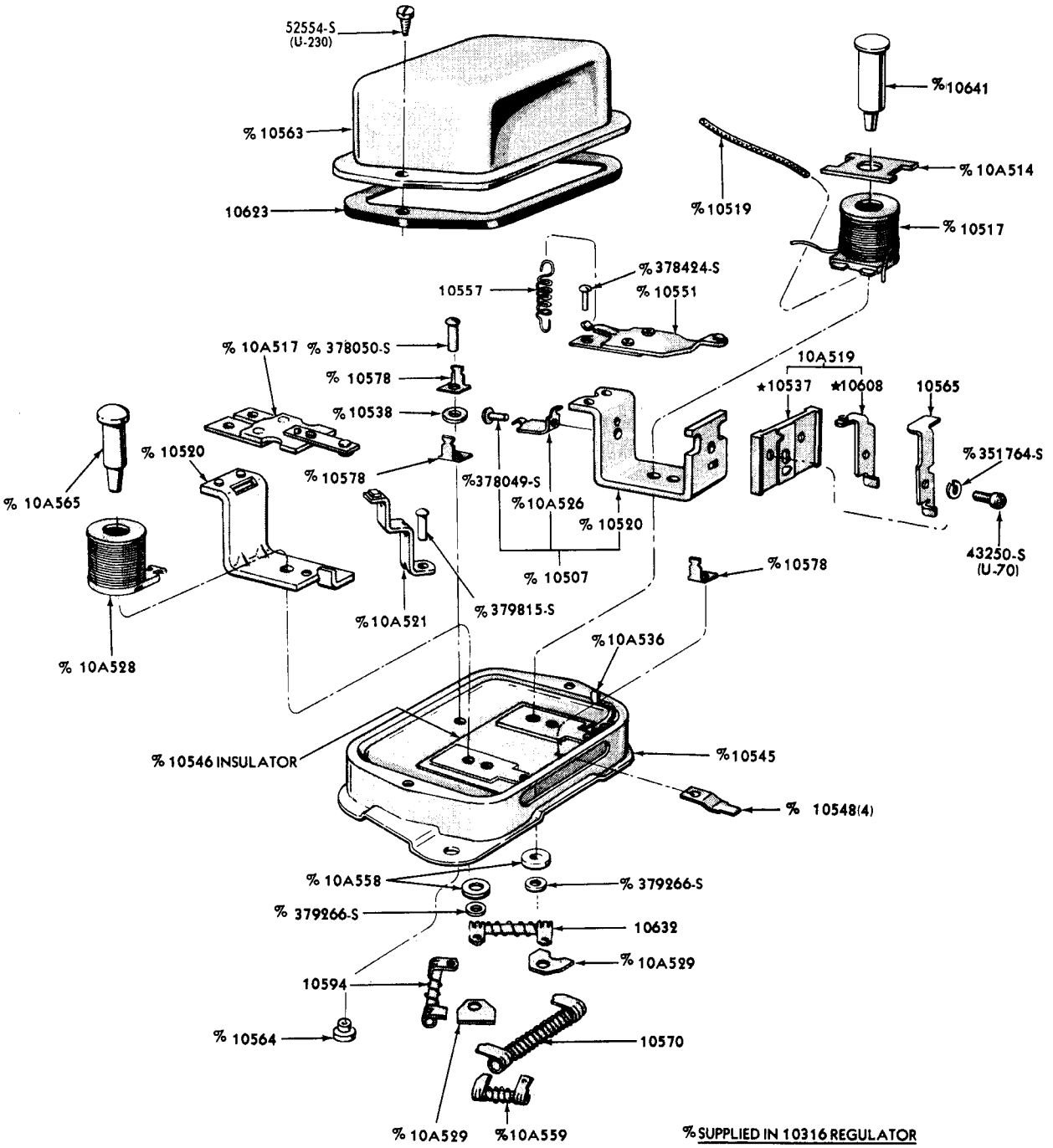

VOLTAGE REGULATOR (FORD 15 VOLT, NEGATIVE GROUND) - ALTERNATOR
1965/72

COPYRIGHT © 1975 — FORD MOTOR COMPANY — DEARBORN, MICHIGAN

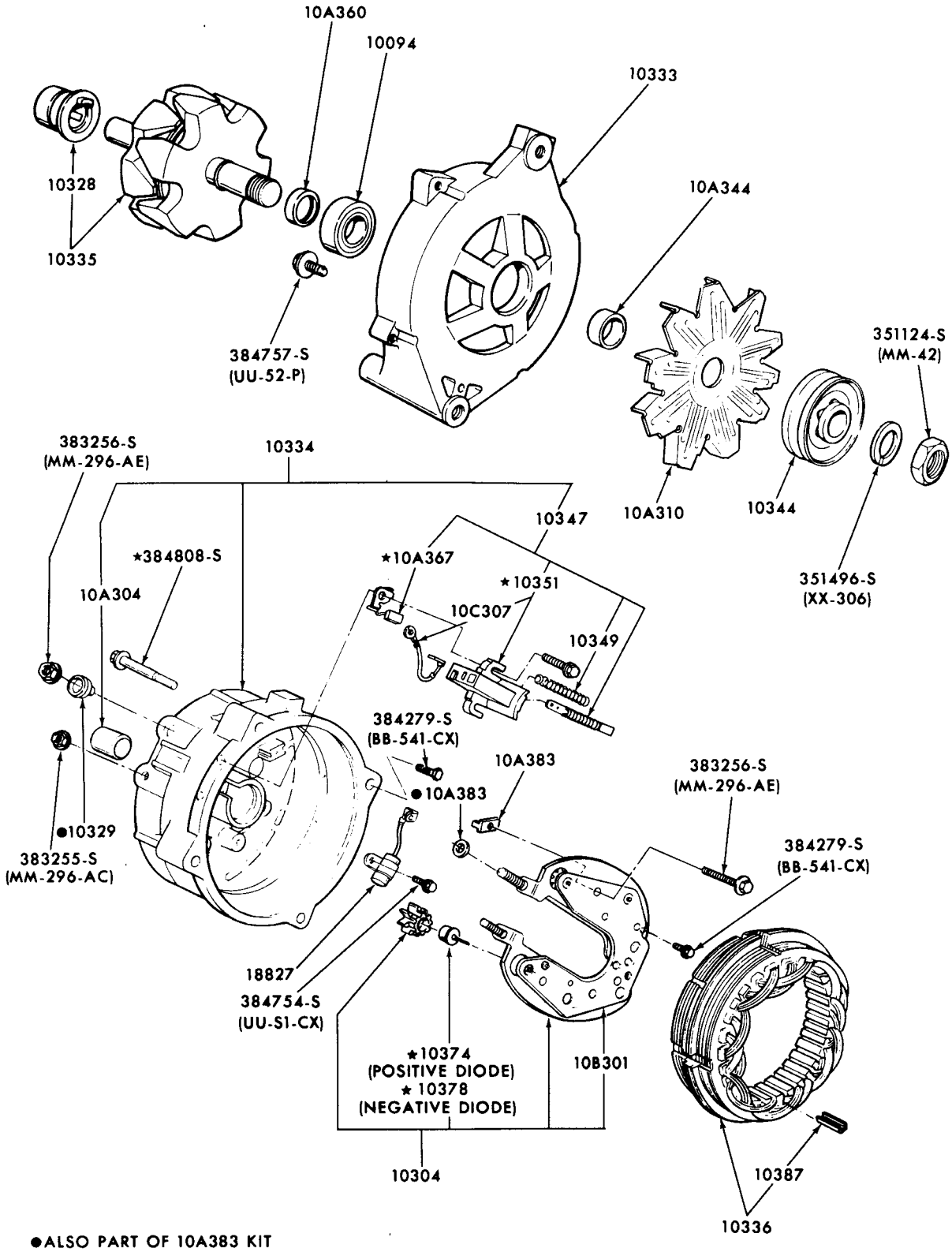

●ALSO PART OF 10A383 KIT

P-10328

ALTERNATOR (MOTORCRAFT 15 VOLT - 70 AMP.).
1972

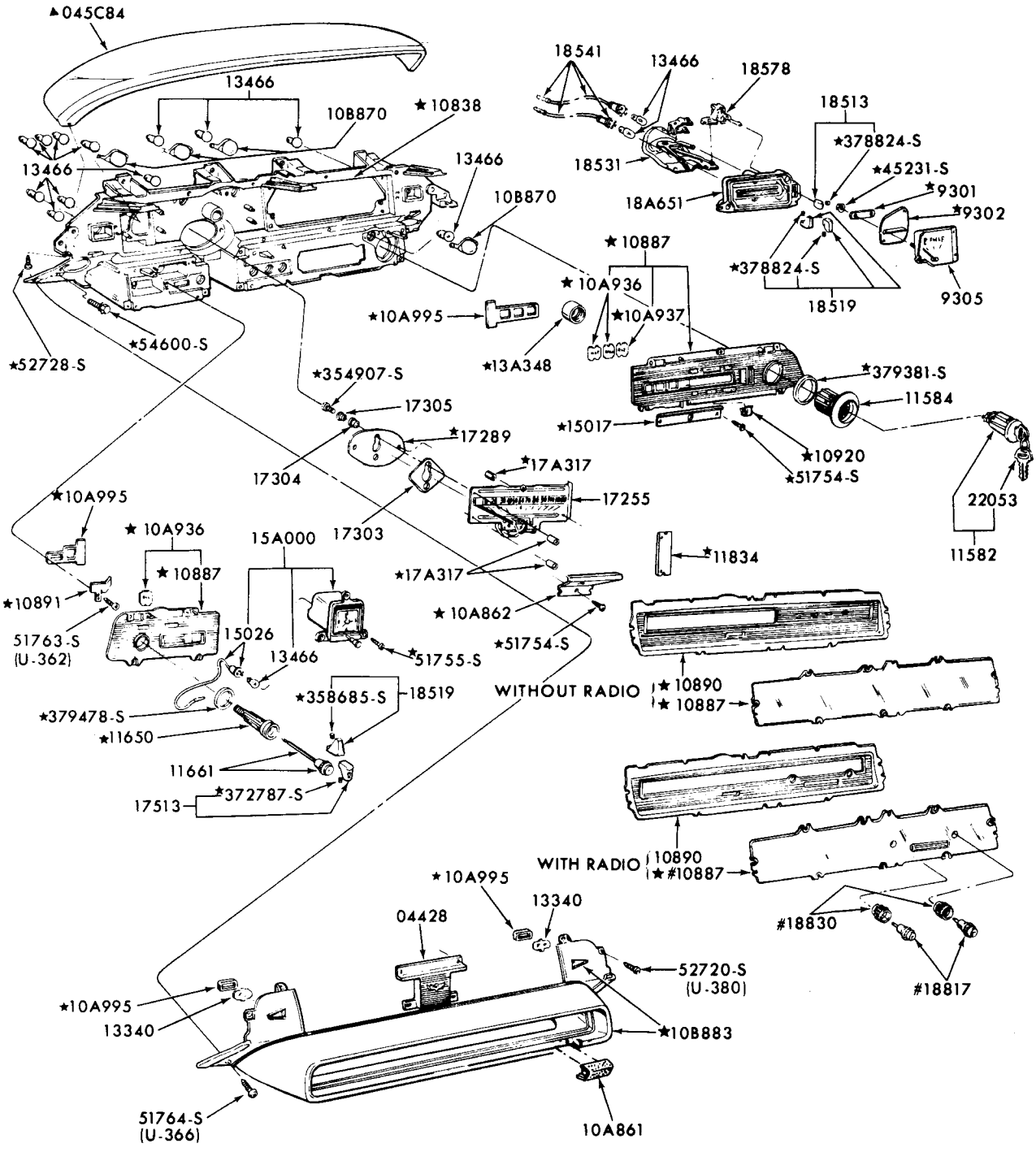

#ALSO SUPPLIED IN 18805 RADIO RELIEVER KIT
▲REFER TO GROUP IN SOFT TRIM SECTION

P-8991

INSTRUMENT CLUSTER and RELATED PARTS
1965/66 FORD

COPYRIGHT © 1975 — FORD MOTOR COMPANY — DEARBORN, MICHIGAN

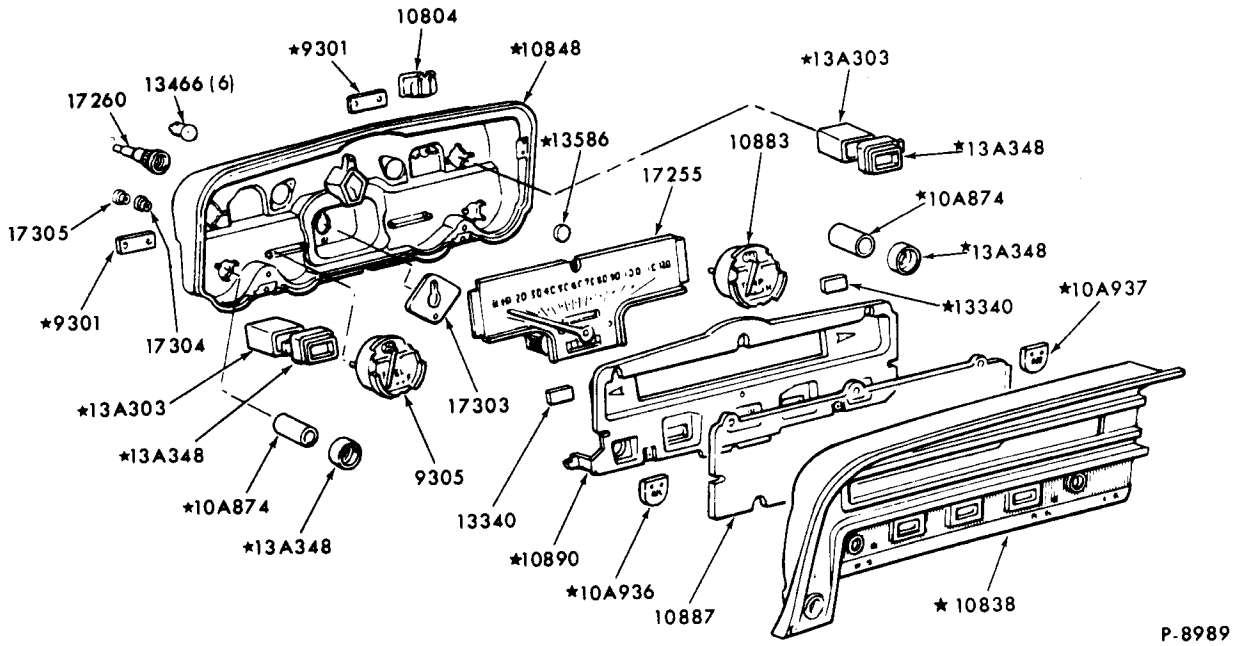

INSTRUMENT CLUSTER and RELATED PARTS
1965 FAIRLANE

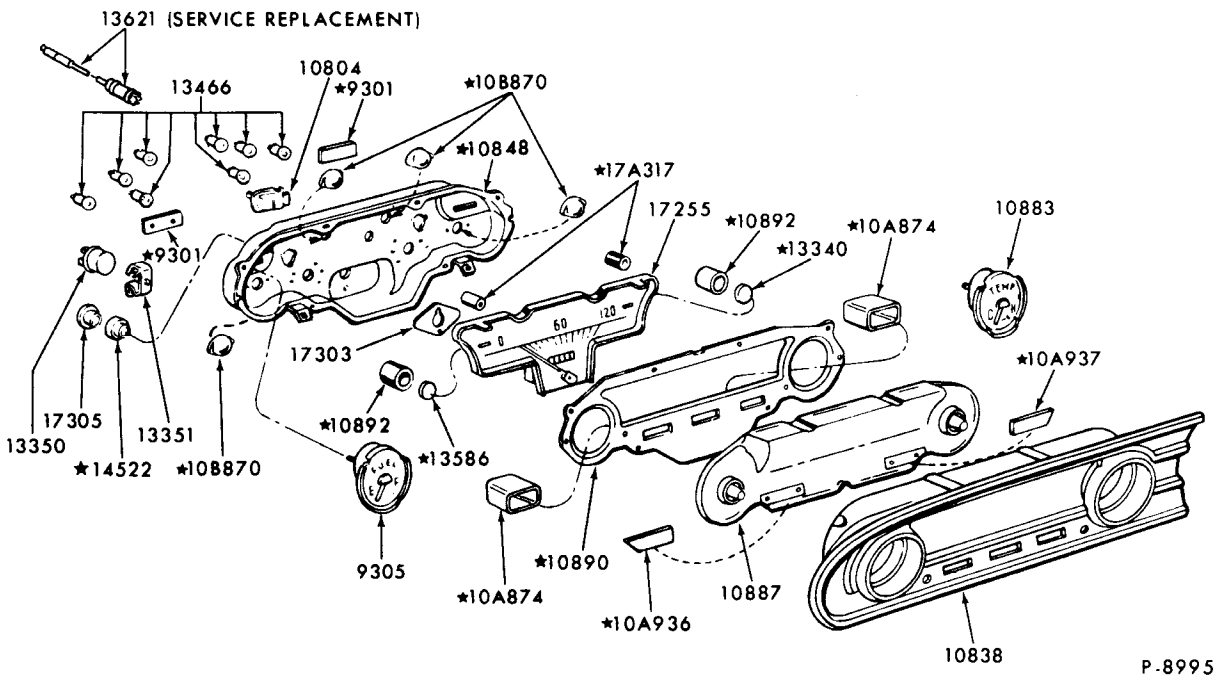

INSTRUMENT CLUSTER and RELATED PARTS
1965 FALCON

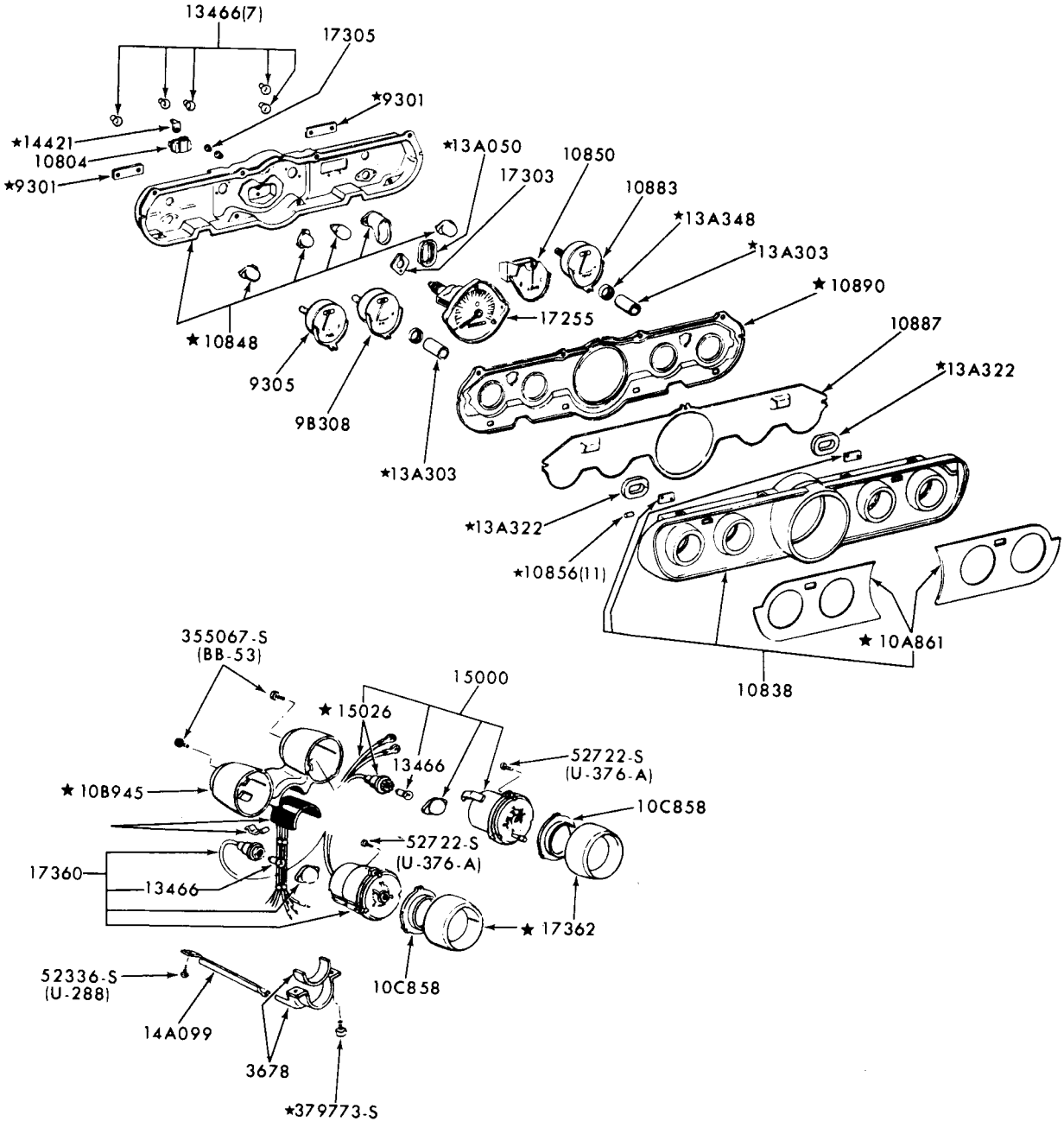

P-8973

INSTRUMENT CLUSTER and RELATED PARTS
1965/66 MUSTANG WITH GAUGES

COPYRIGHT © 1975 — FORD MOTOR COMPANY — DEARBORN, MICHIGAN

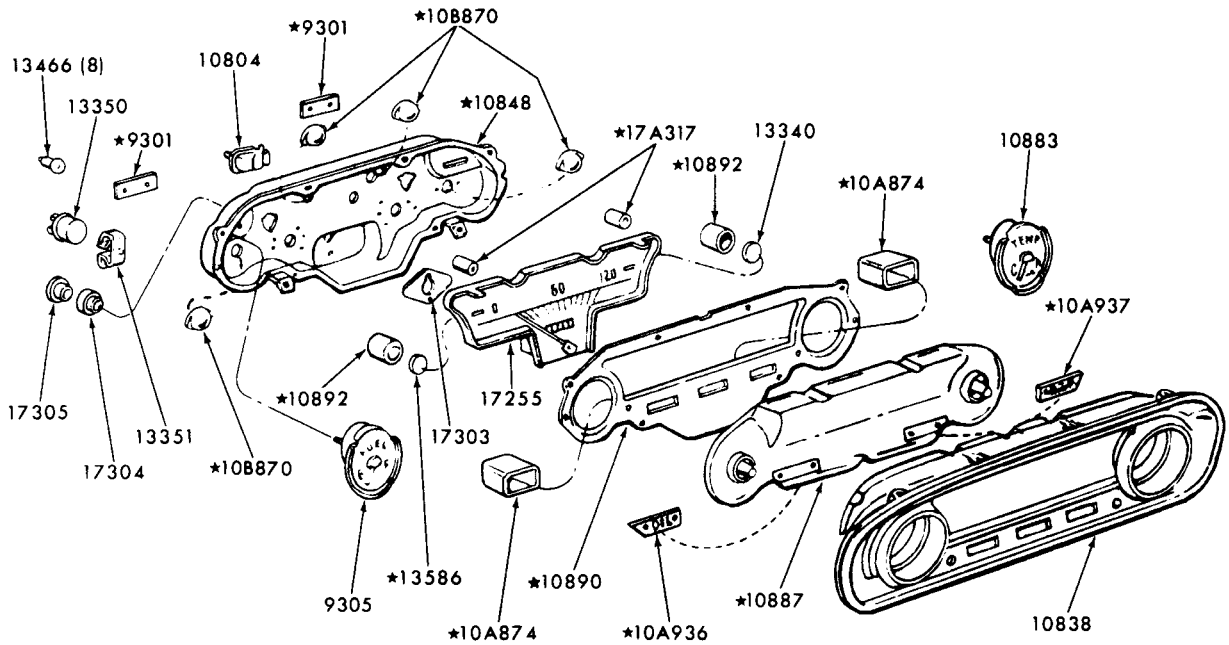

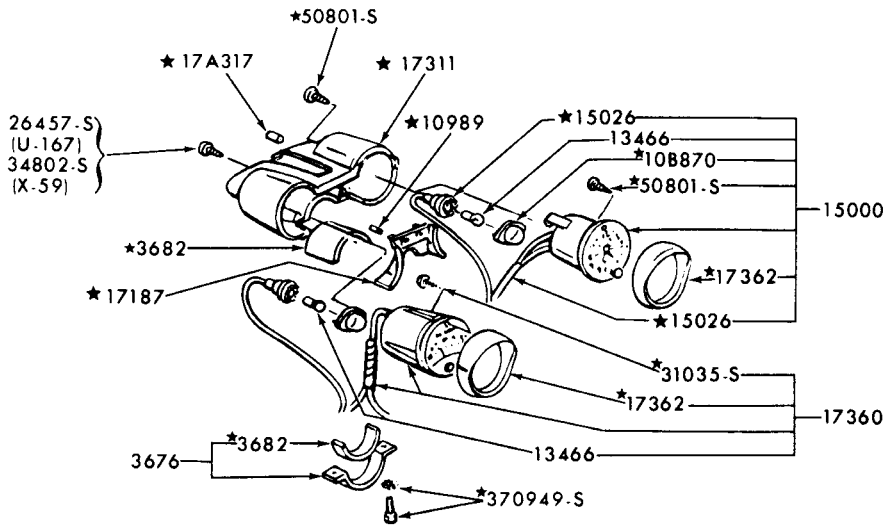

P-8985

INSTRUMENT CLUSTER and RELATED PARTS
1965 MUSTANG - WITH WARNING LIGHTS

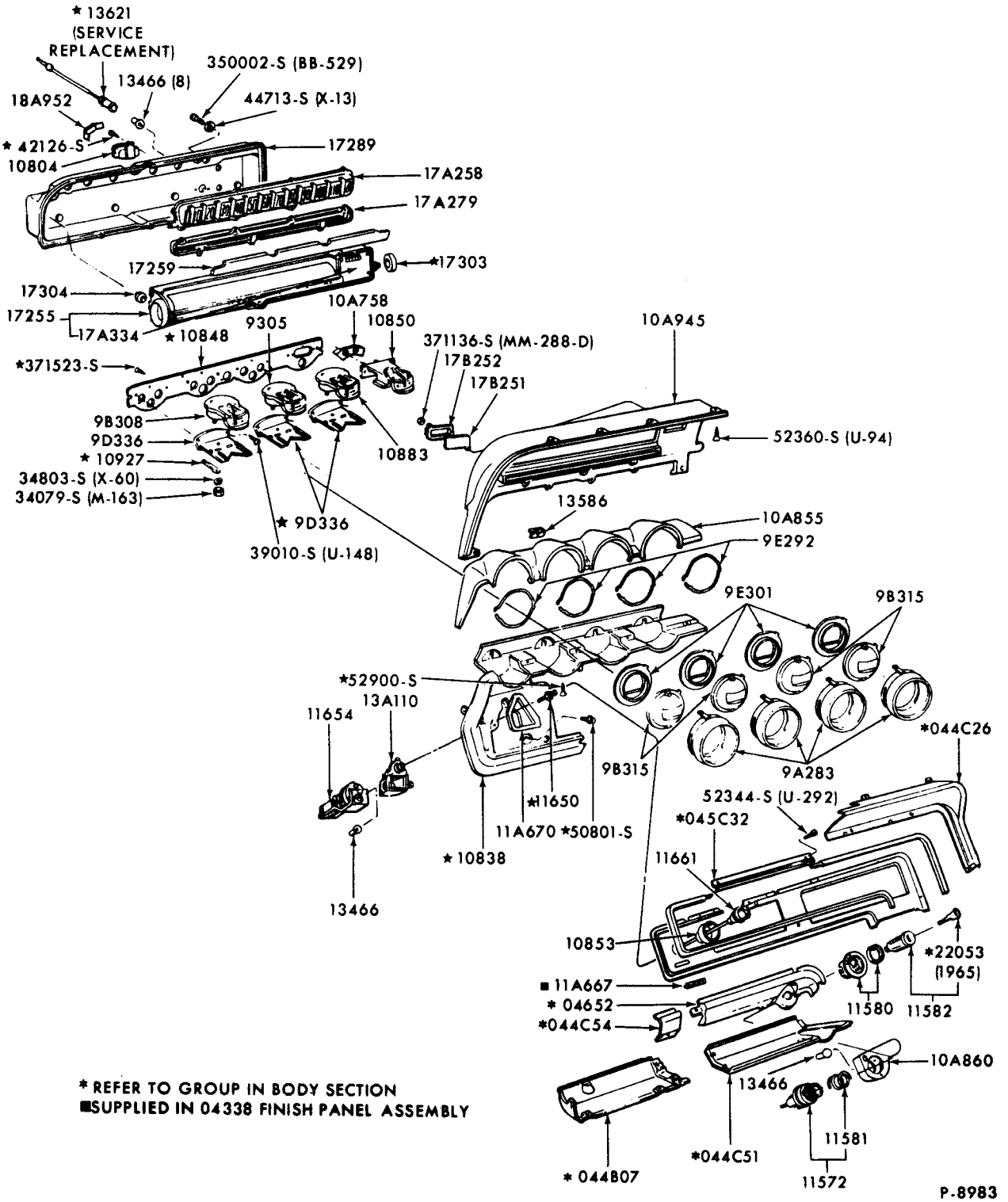

* REFER TO GROUP IN BODY SECTION
■ SUPPLIED IN 04338 FINISH PANEL ASSEMBLY

INSTRUMENT CLUSTER and RELATED PARTS
1965/66 THUNDERBIRD

COPYRIGHT © 1975 — FORD MOTOR COMPANY — DEARBORN, MICHIGAN

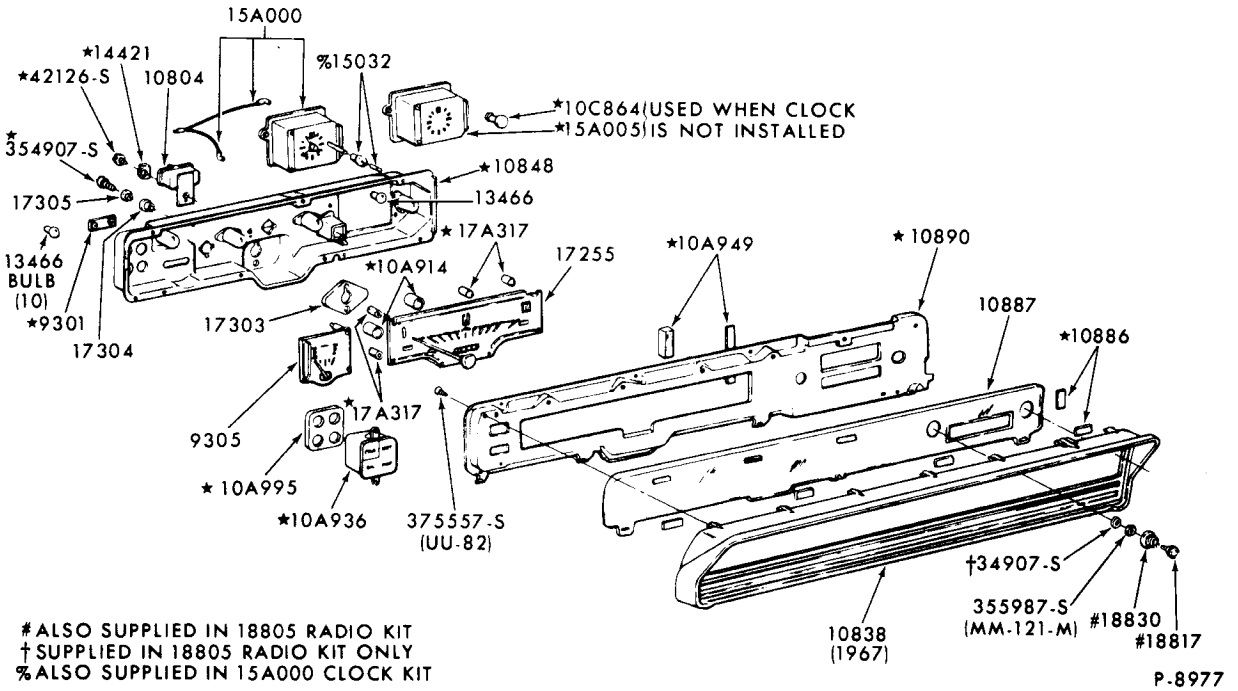

INSTRUMENT CLUSTER and RELATED PARTS
1966/67 FAIRLANE

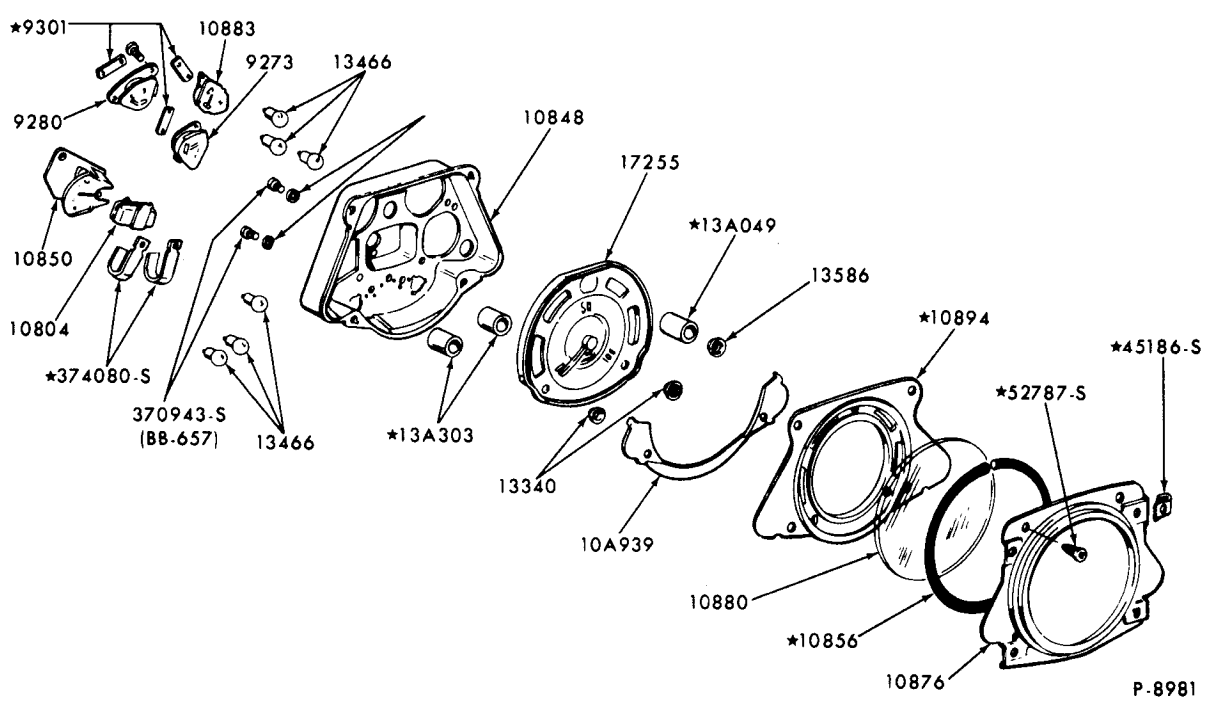

INSTRUMENT CLUSTER and RELATED PARTS
1966/67 BRONCO

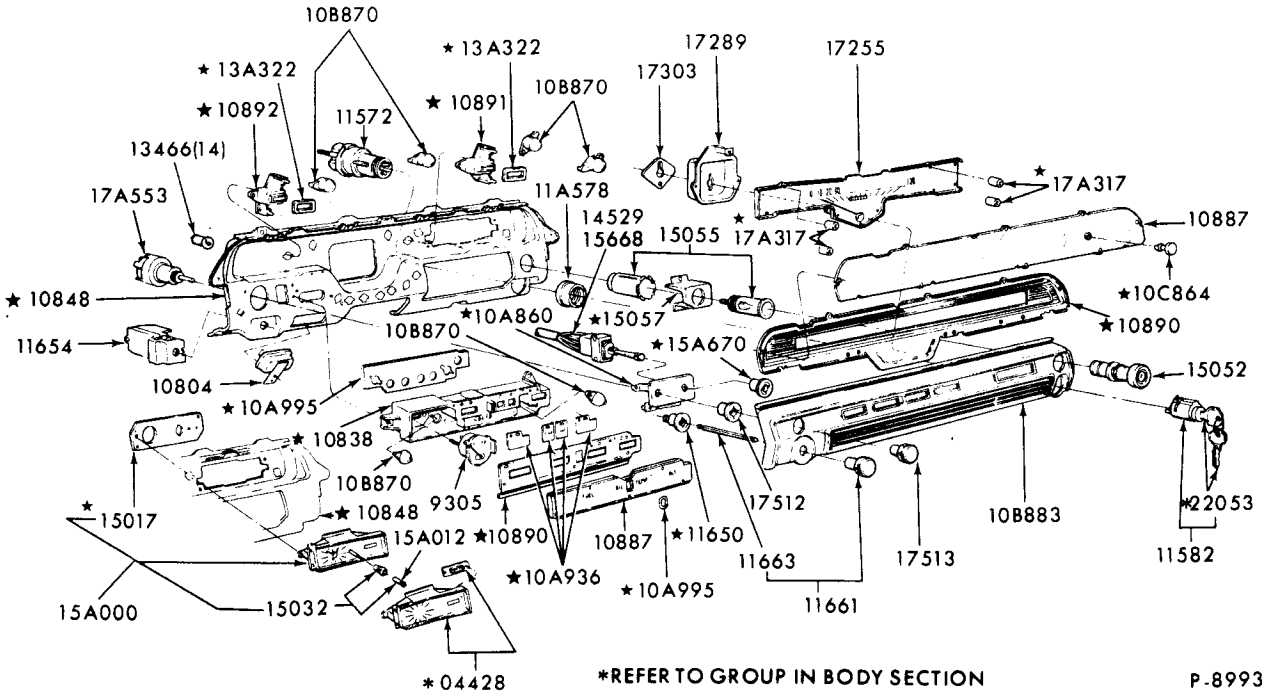

INSTRUMENT CLUSTER and RELATED PARTS
1967 FORD

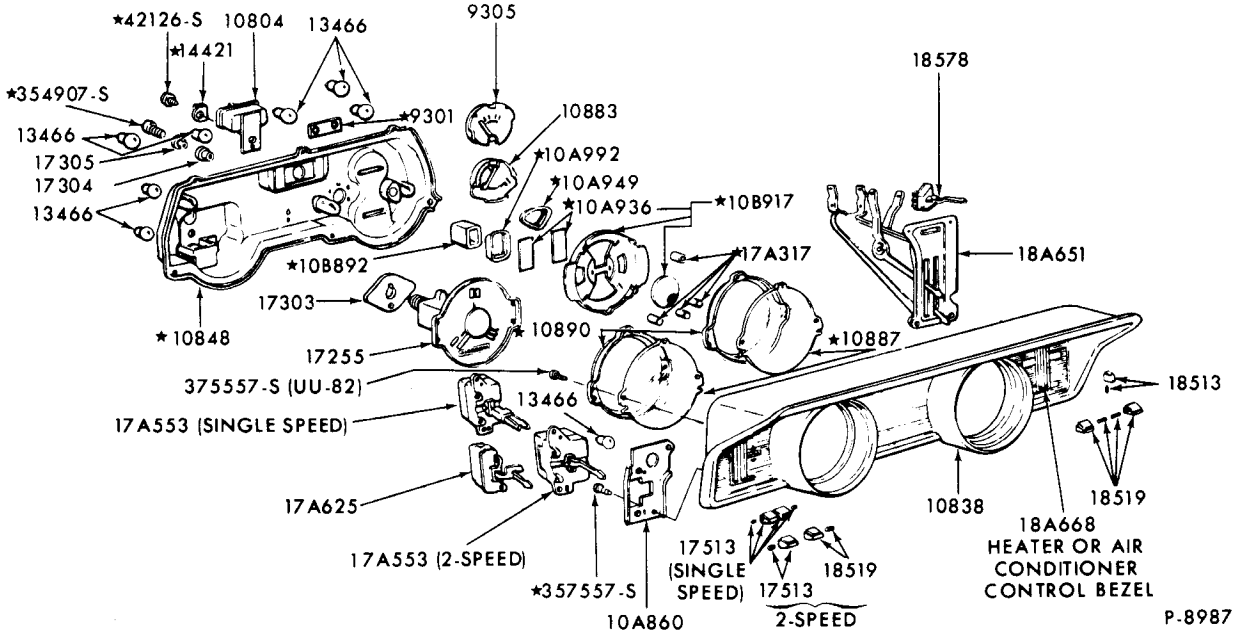

INSTRUMENT CLUSTER and RELATED PARTS
1966/67 FALCON

COPYRIGHT © 1975 — FORD MOTOR COMPANY — DEARBORN, MICHIGAN

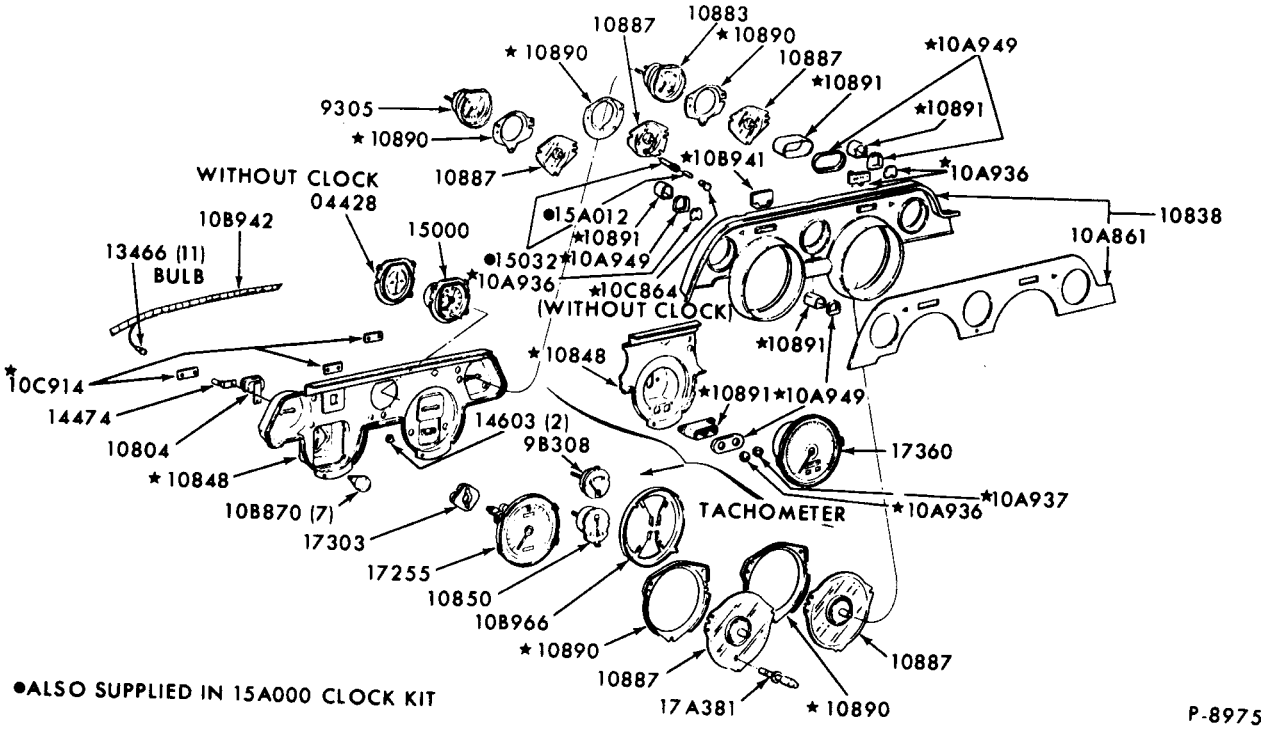

INSTRUMENT CLUSTER and RELATED PARTS
1967/68 MUSTANG

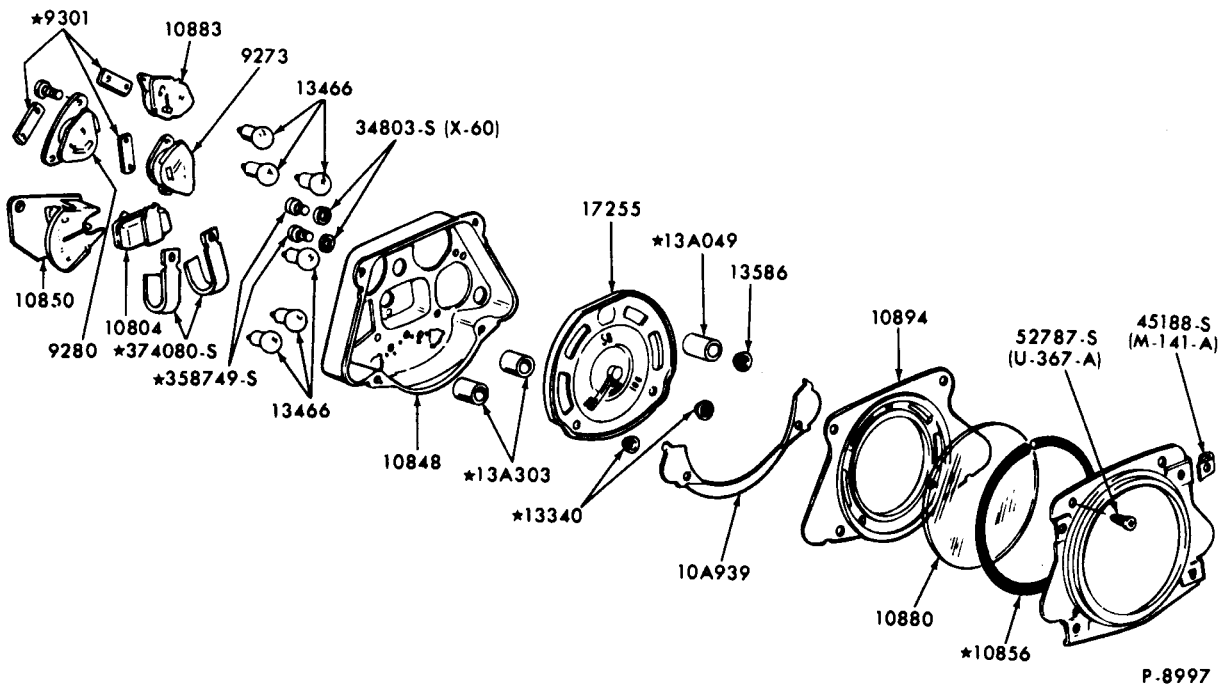

INSTRUMENT CLUSTER and RELATED PARTS
1968/72 BRONCO

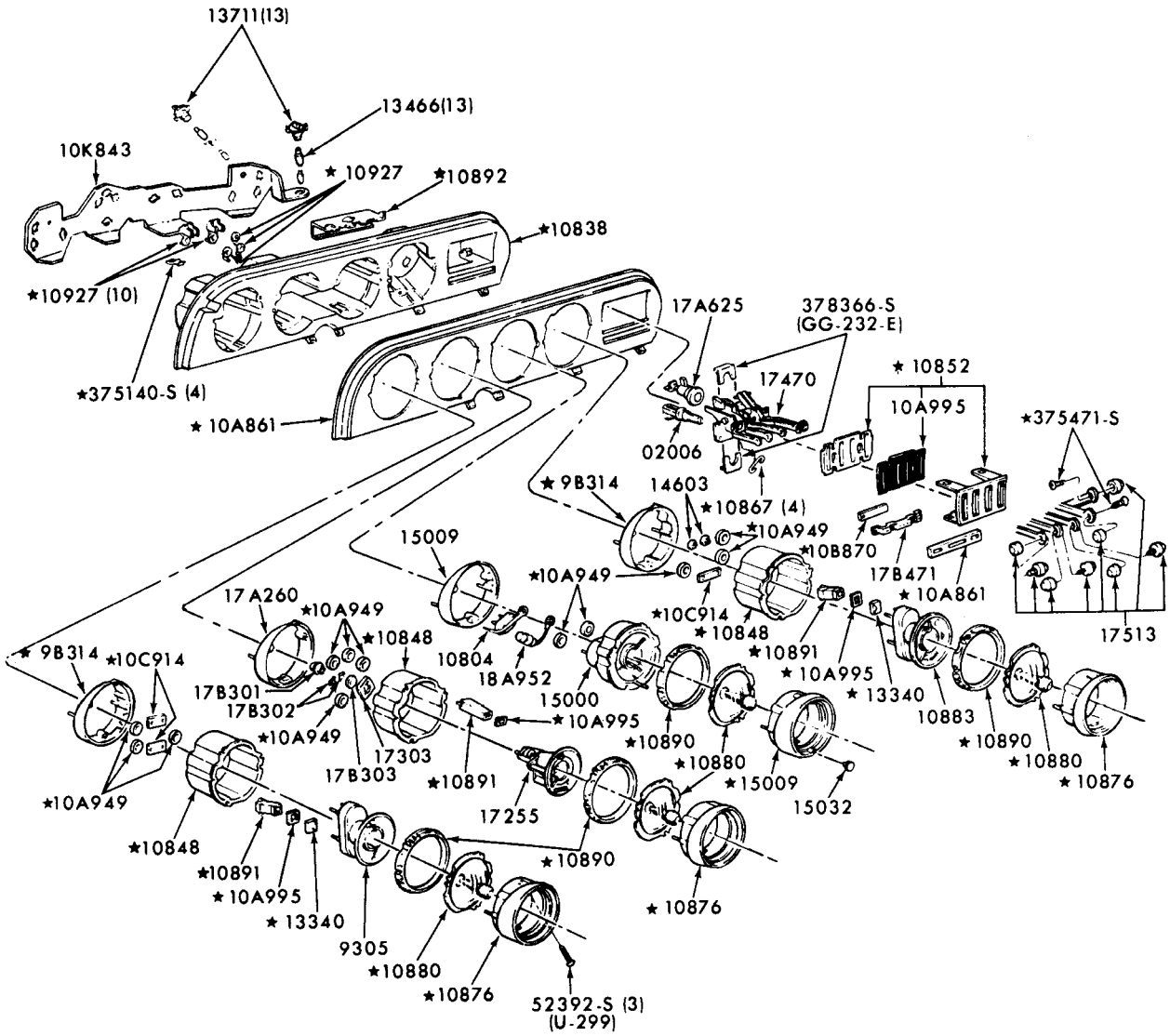

P-8979

INSTRUMENT CLUSTER and RELATED PARTS
1967 THUNDERBIRD

COPYRIGHT © 1975 — FORD MOTOR COMPANY — DEARBORN, MICHIGAN

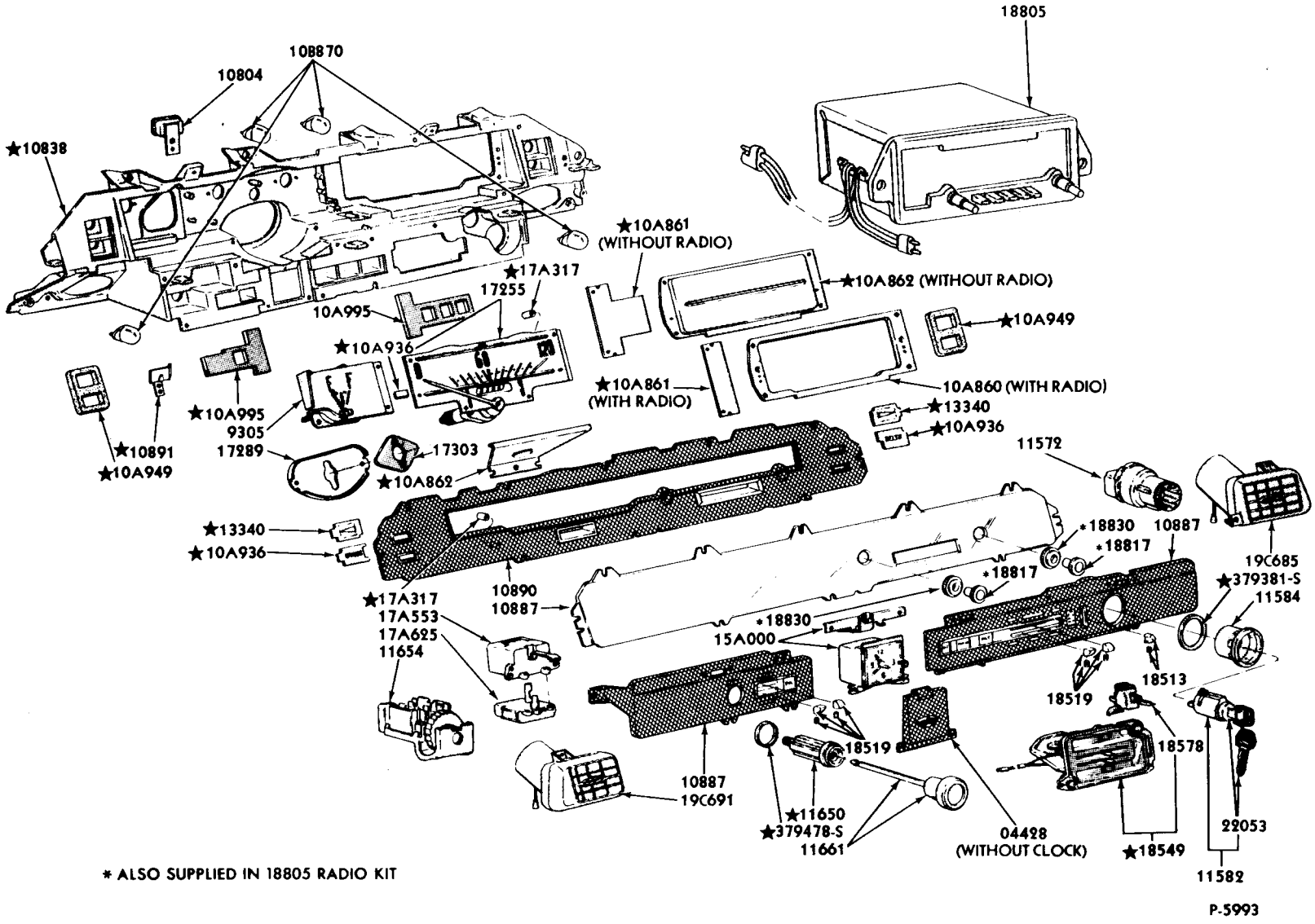

* ALSO SUPPLIED IN 18805 RADIO KIT

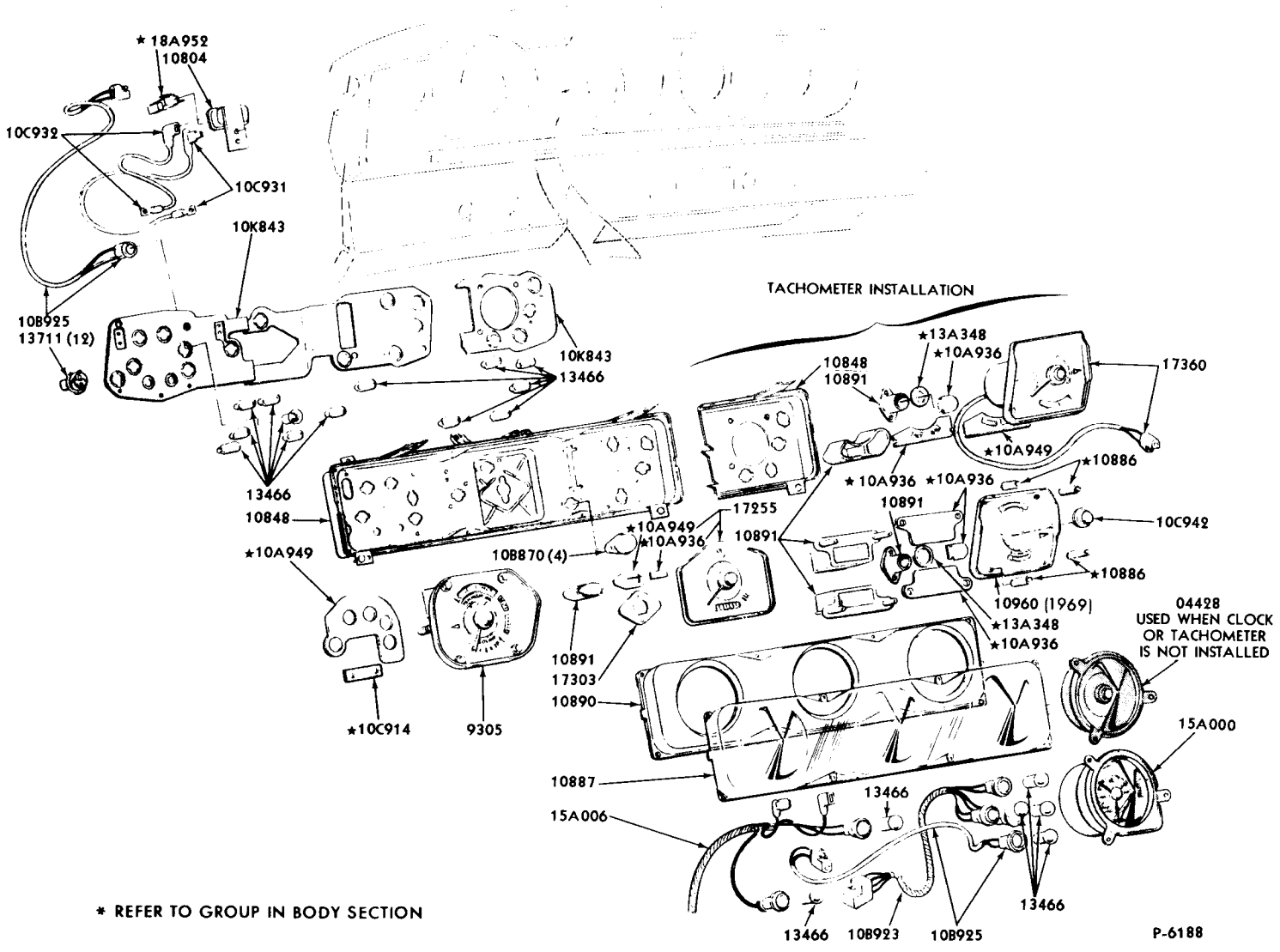

* REFER TO GROUP IN BODY SECTION

INSTRUMENT CLUSTER and RELATED PARTS
1968/69 FAIRLANE/TORINO

COPYRIGHT © 1975 — FORD MOTOR COMPANY — DEARBORN, MICHIGAN

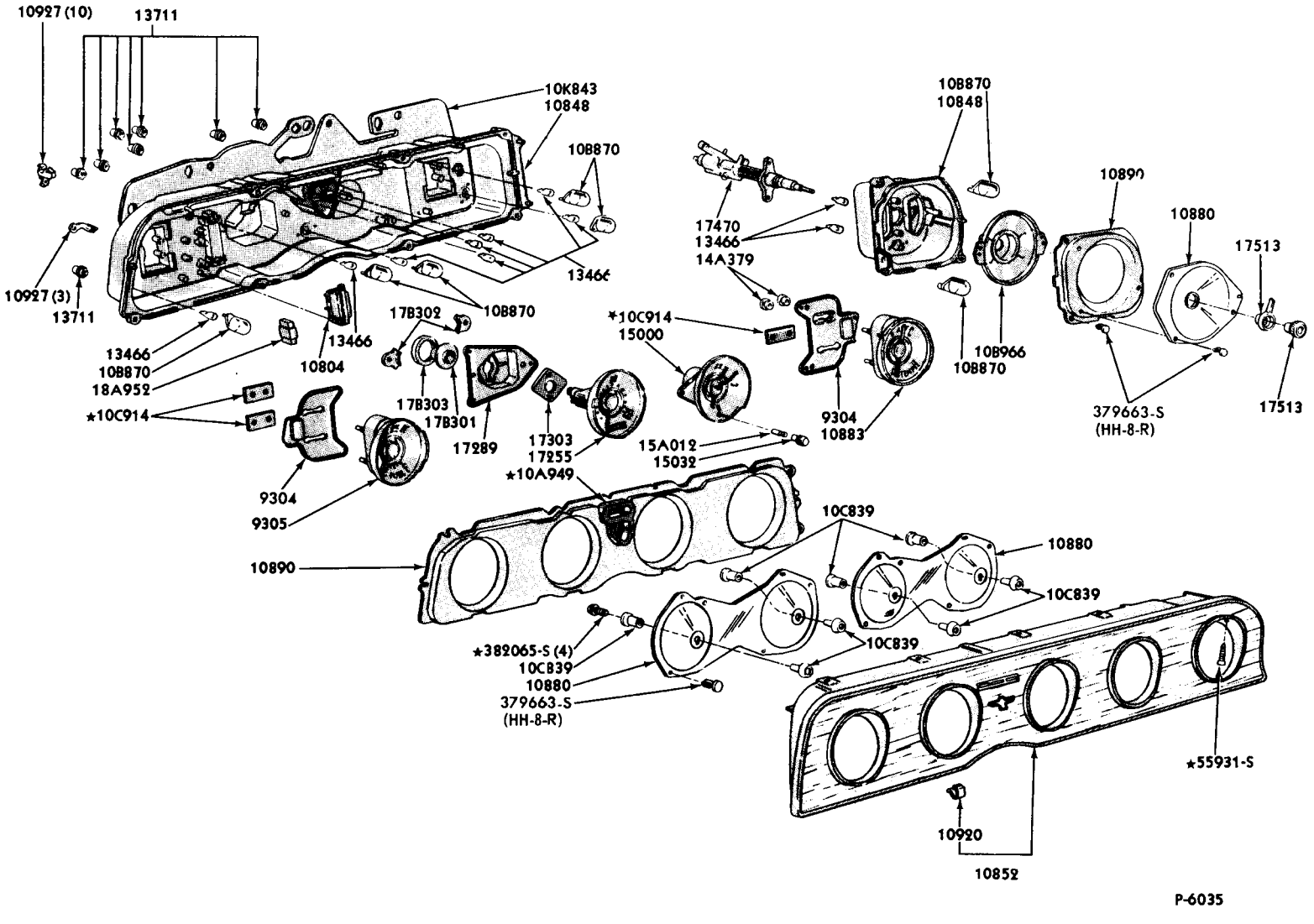
10927 (10)
13711
10K843
10848
108870
13466
10927 (3)
13711
108870
13466
13466
108870
18A952
10804
★10C914
17B302
17B303
17B301
17289
17303
17255
★10A949
9304
9305
10890
★382065-S (4)
10C839
10880
379663-S
(HH-8-R)
10C839
10880
10C839
10C839
★55931-S
10920
10852
108870
10848
17470
13466
14A379
★10C914
15000
15A012
15032
9304
10883
10B966
108870
10890
10880
17513
17513
379663-S
(HH-8-R)
P-6035

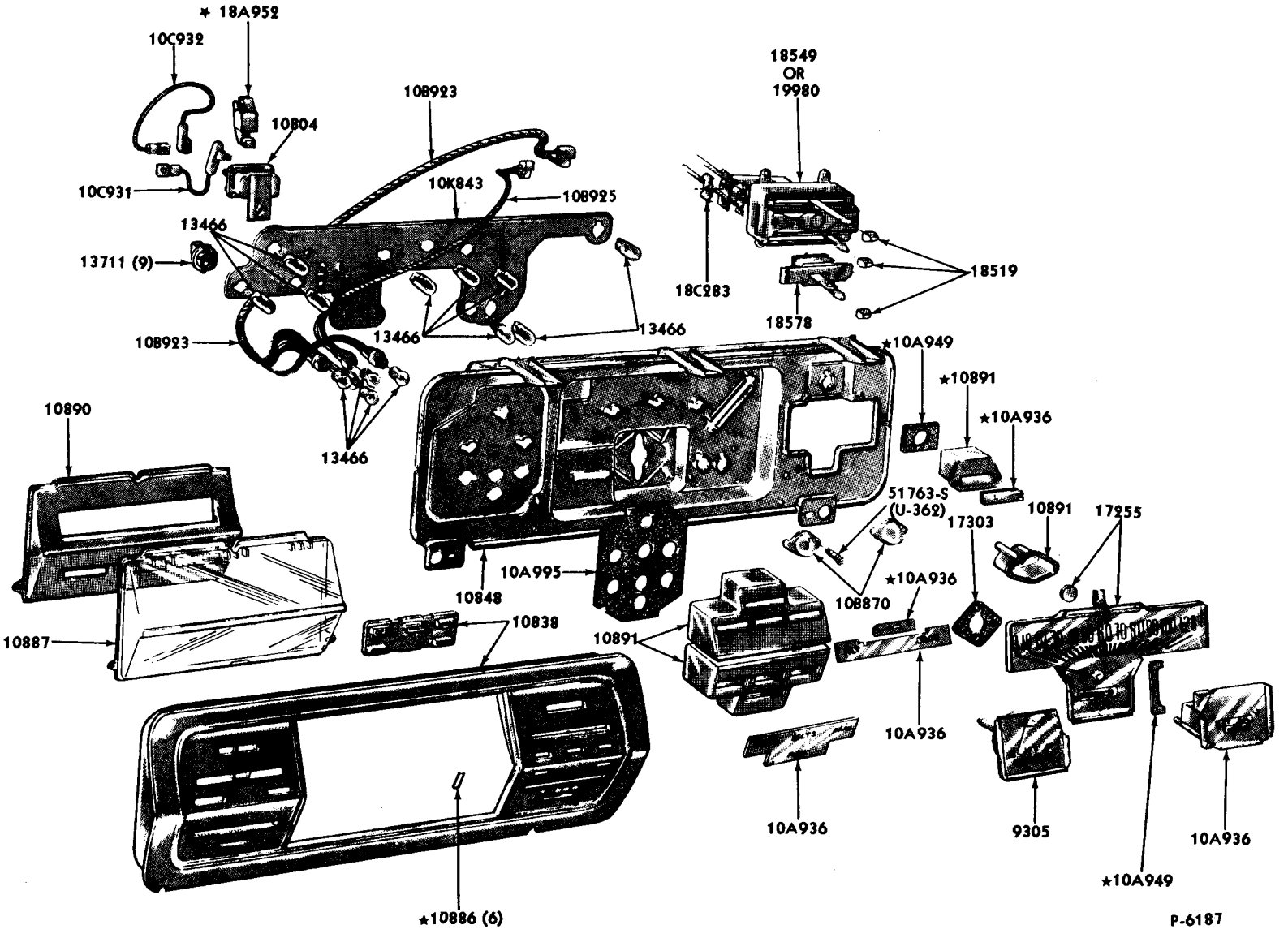

INSTRUMENT CLUSTER and RELATED PARTS
1968/70 FALCON

COPYRIGHT © 1975 — FORD MOTOR COMPANY — DEARBORN, MICHIGAN

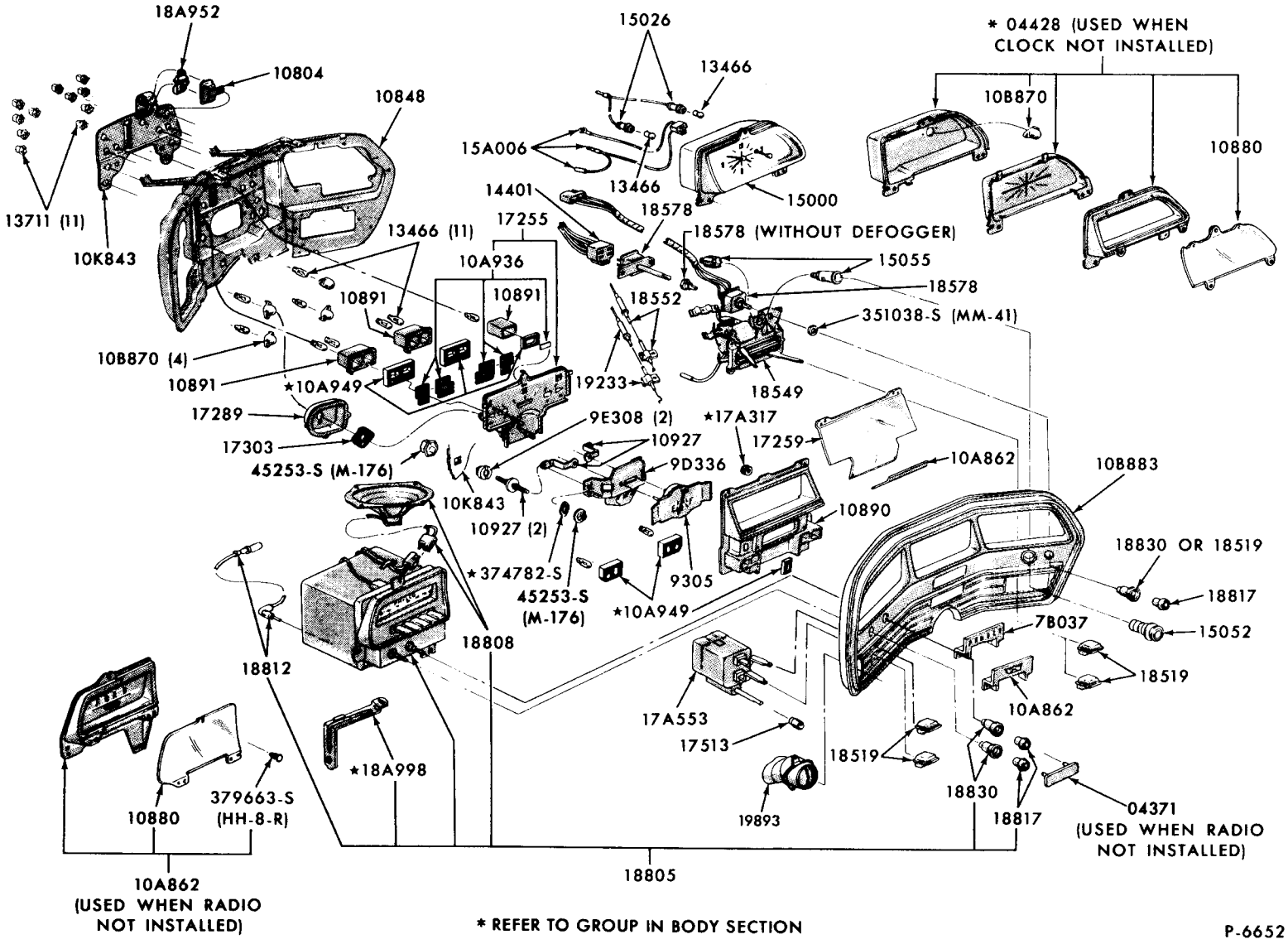

* REFER TO GROUP IN BODY SECTION

P-6652

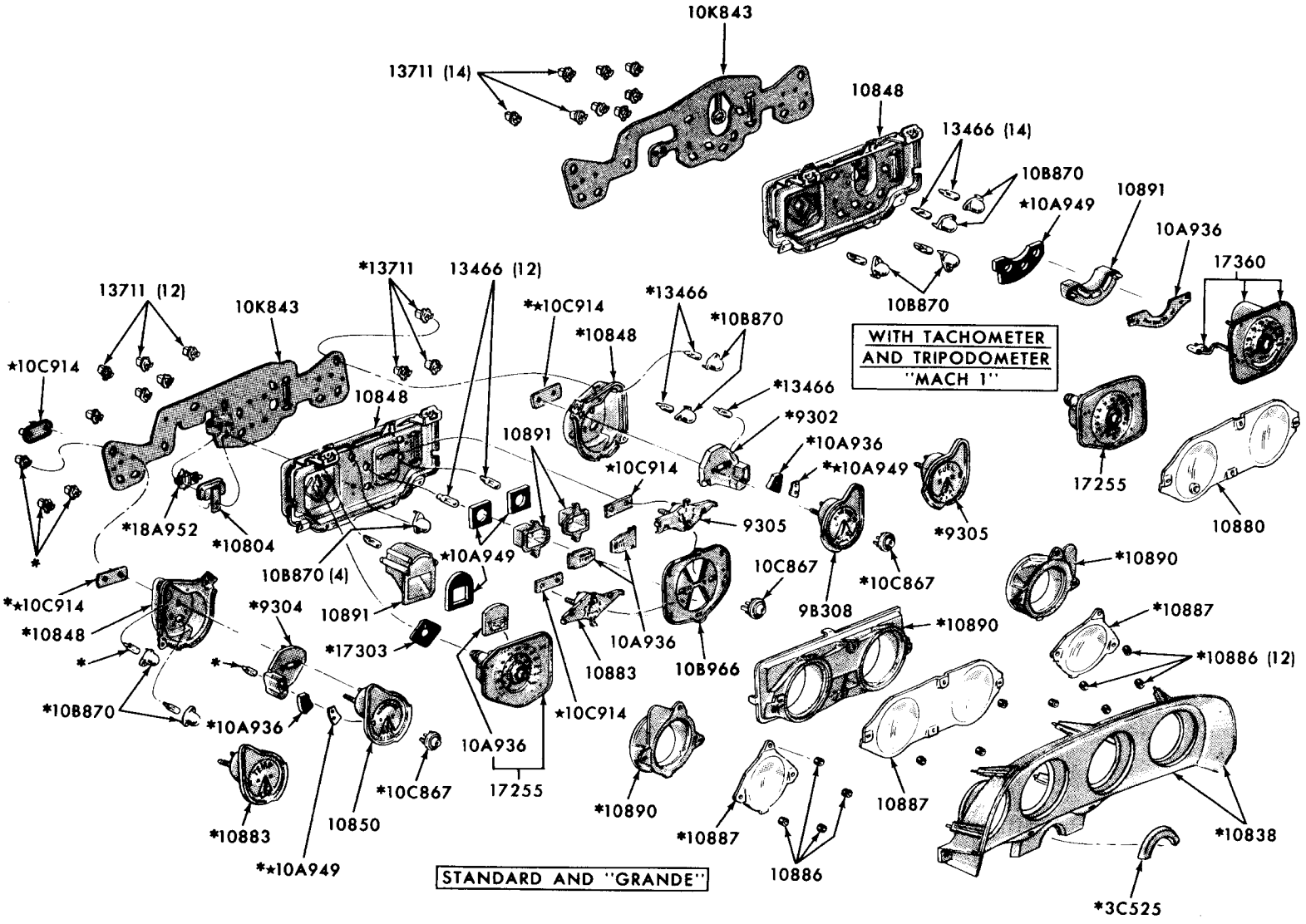

*ALSO REQUIRED WITH TACHOMETER AND TRIPODOMETER CLUSTER

P-6658

INSTRUMENT CLUSTER and RELATED PARTS
1969/70 MUSTANG

COPYRIGHT © 1975 — FORD MOTOR COMPANY — DEARBORN, MICHIGAN

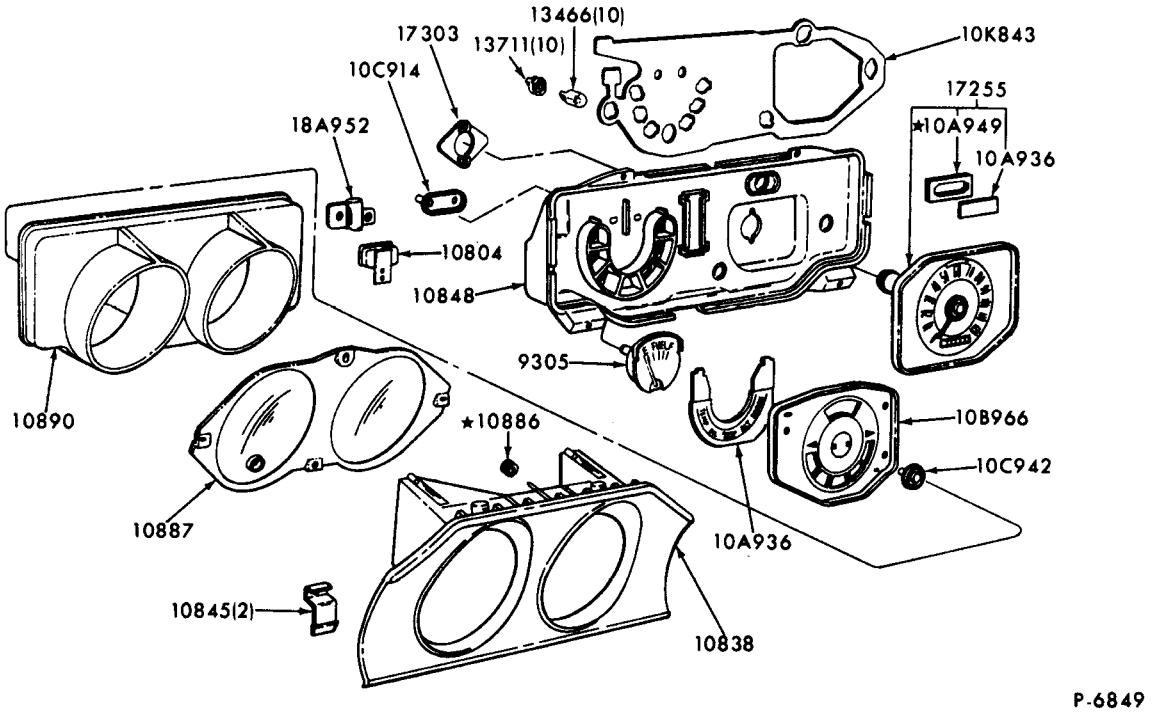

INSTRUMENT CLUSTER and RELATED PARTS
1970/72 MAVERICK

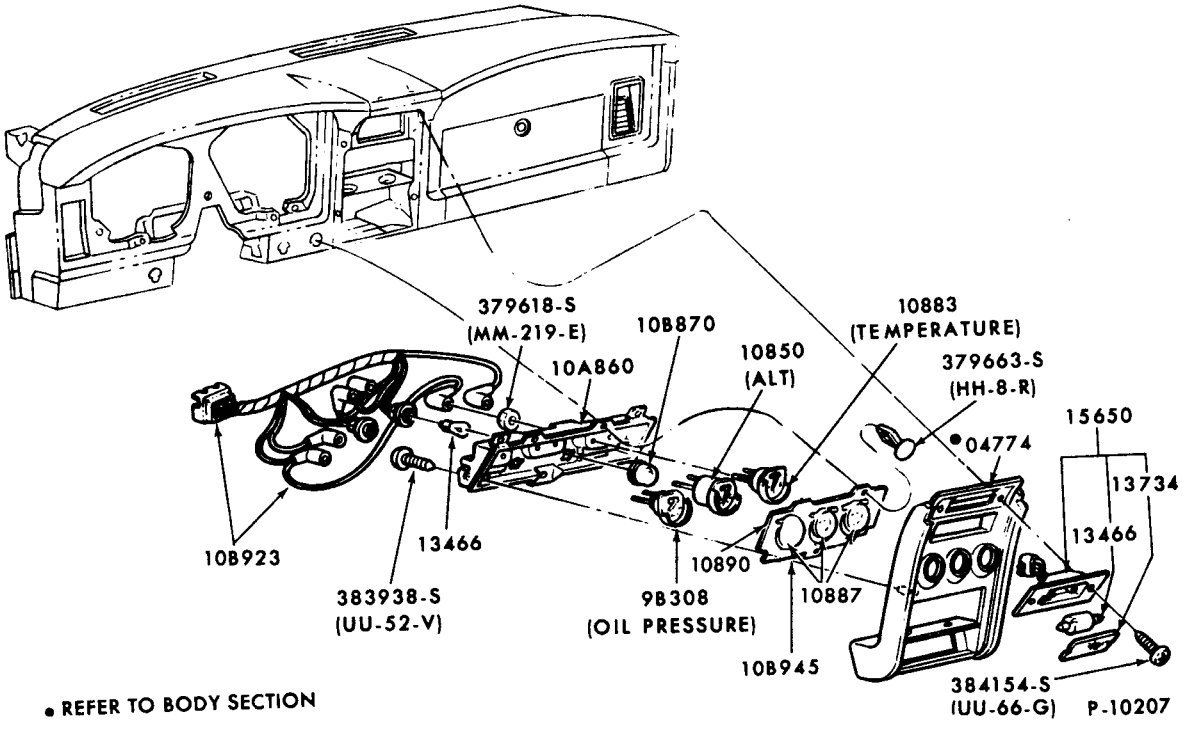

AUXILIARY INSTRUMENT CLUSTER-WITH GAUGES
1971/72 MUSTANG

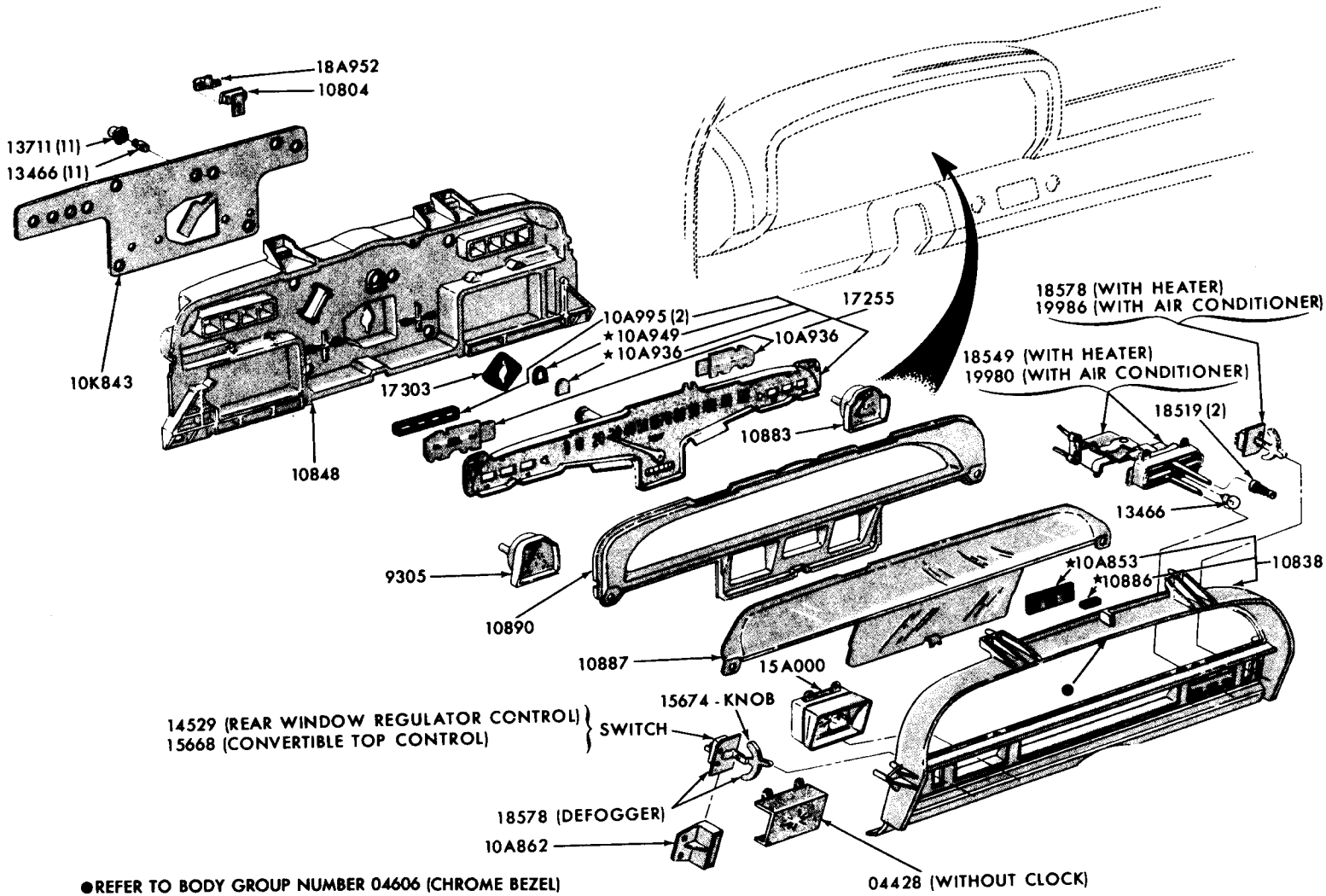

P-7079

INSTRUMENT CLUSTER and RELATED PARTS
1970/71 FAIRLANE/TORINO

COPYRIGHT © 1975 — FORD MOTOR COMPANY — DEARBORN, MICHIGAN

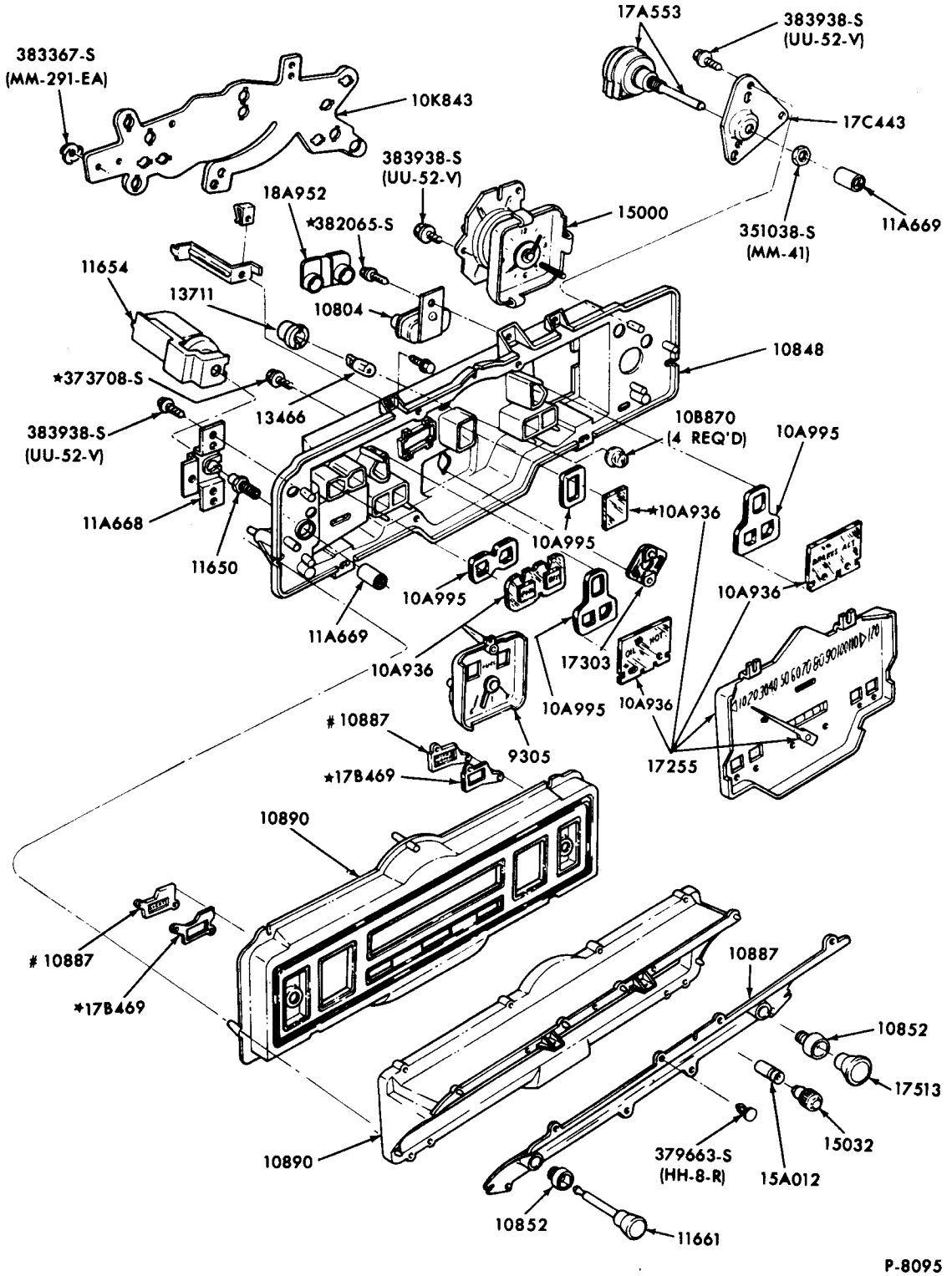

FROM 6/1/71 PART OF 10890

INSTRUMENT CLUSTER and RELATED PARTS
1971/72 FORD

COPYRIGHT © 1975 — FORD MOTOR COMPANY — DEARBORN, MICHIGAN

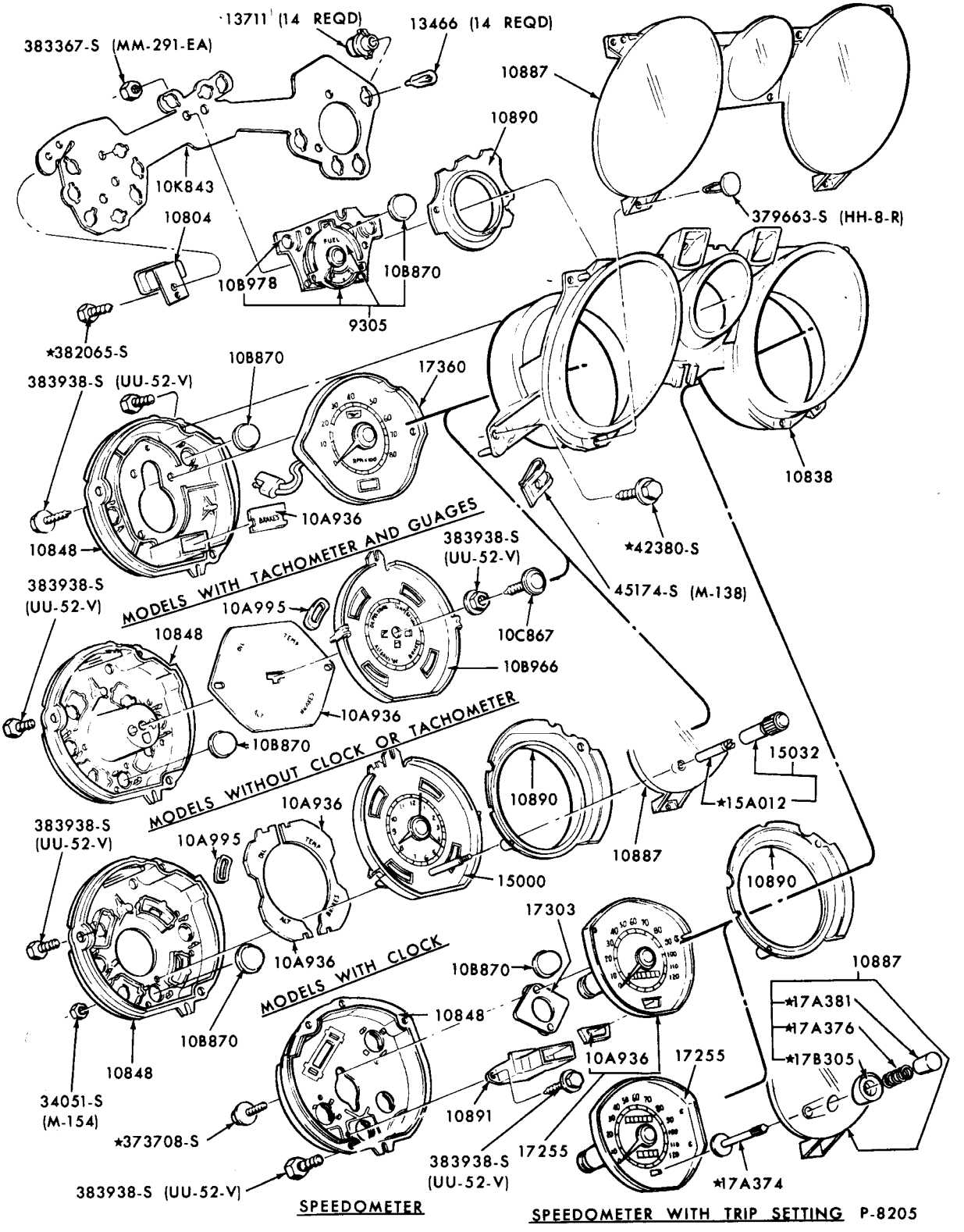

INSTRUMENT CLUSTER and RELATED PARTS
1971/72 MUSTANG

COPYRIGHT © 1975 — FORD MOTOR COMPANY — DEARBORN, MICHIGAN

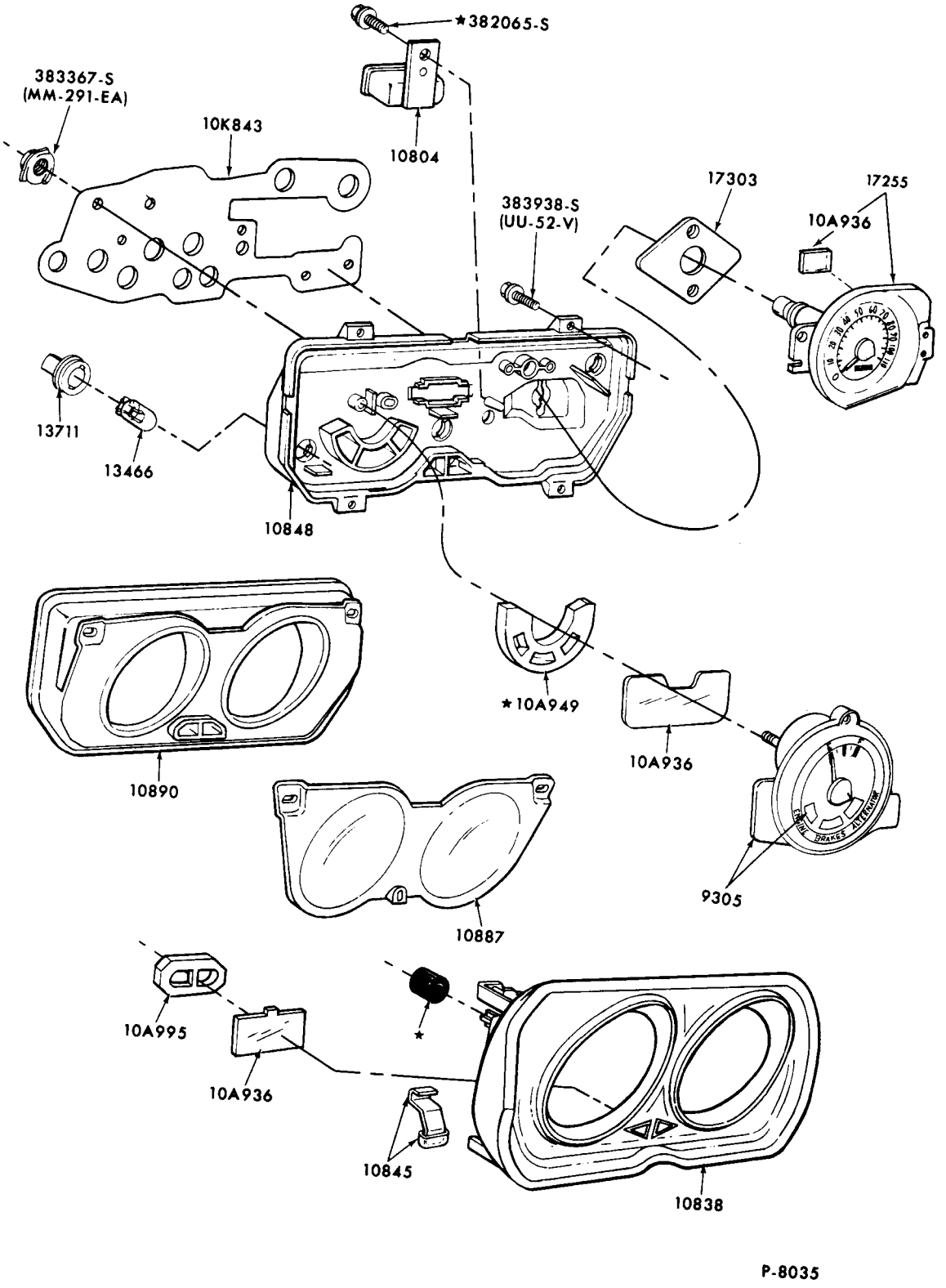

INSTRUMENT CLUSTER and RELATED PARTS
1971/72 PINTO

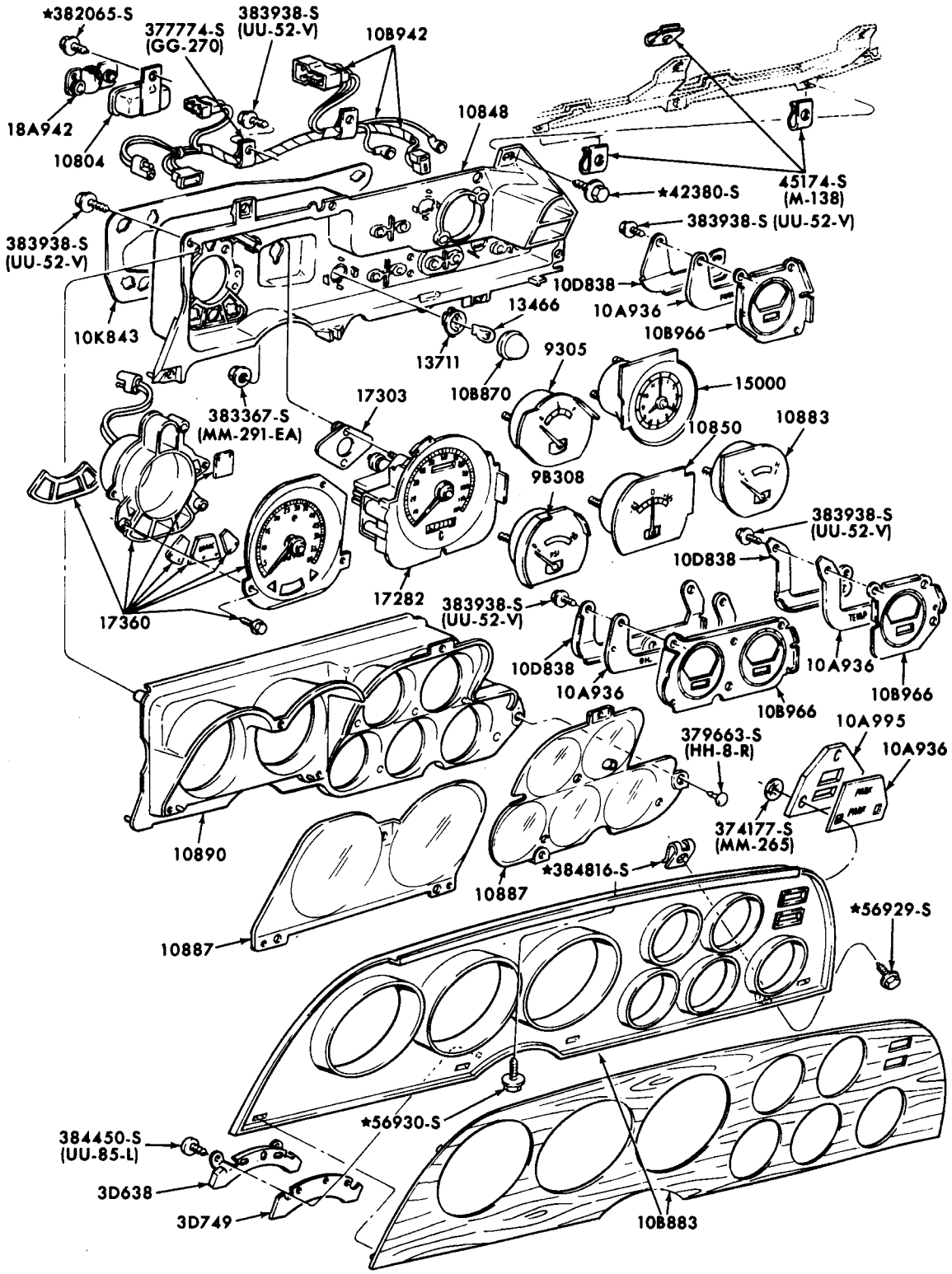

P-8768

INSTRUMENT CLUSTER and RELATED PARTS
1972 TORINO - WITH RALLYE INSTRUMENTATION GROUP

COPYRIGHT © 1975 — FORD MOTOR COMPANY — DEARBORN, MICHIGAN

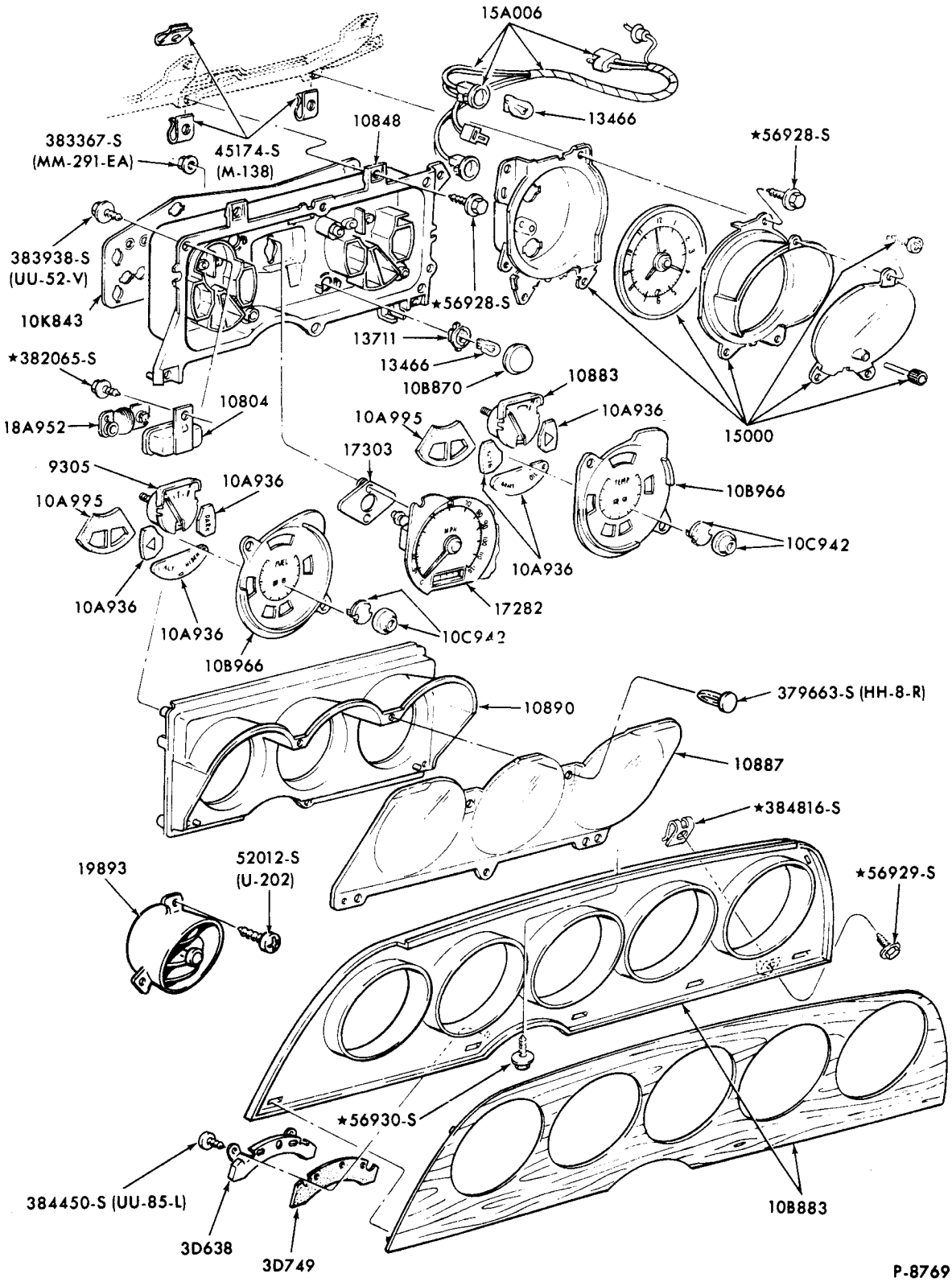

INSTRUMENT CLUSTER and RELATED PARTS
1972 TORINO - WITHOUT RALLYE INSTRUMENTATION GROUP

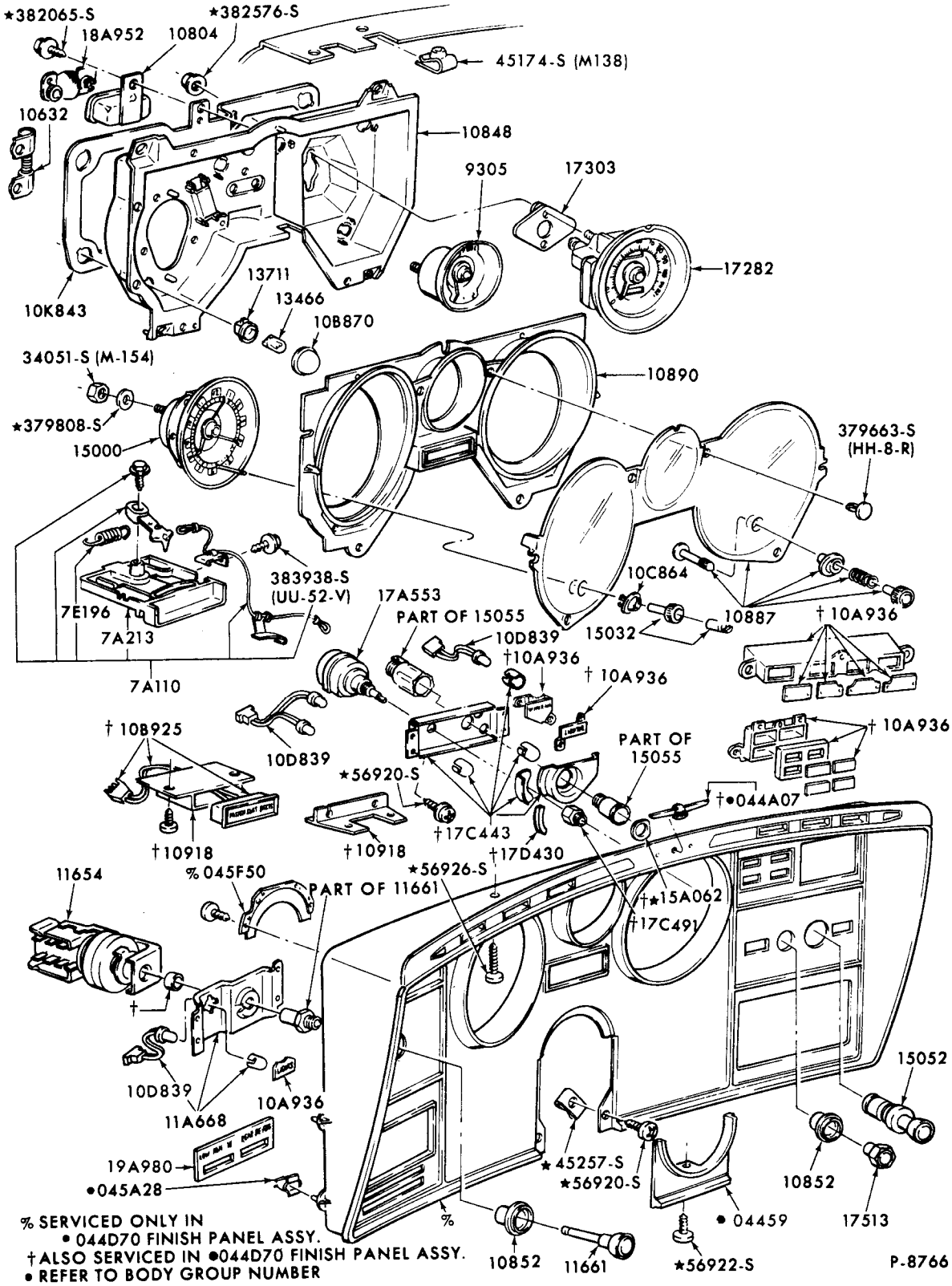

INSTRUMENT CLUSTER and RELATED PARTS
1972 THUNDERBIRD

COPYRIGHT © 1975 — FORD MOTOR COMPANY — DEARBORN, MICHIGAN

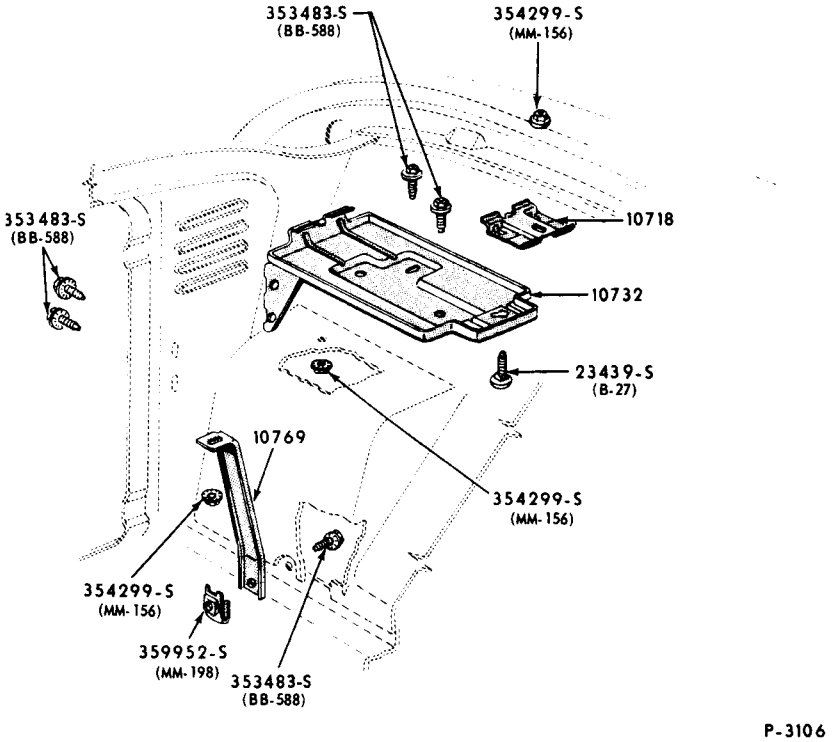

BATTERY CARRIER and RELATED PARTS
1965 FALCON

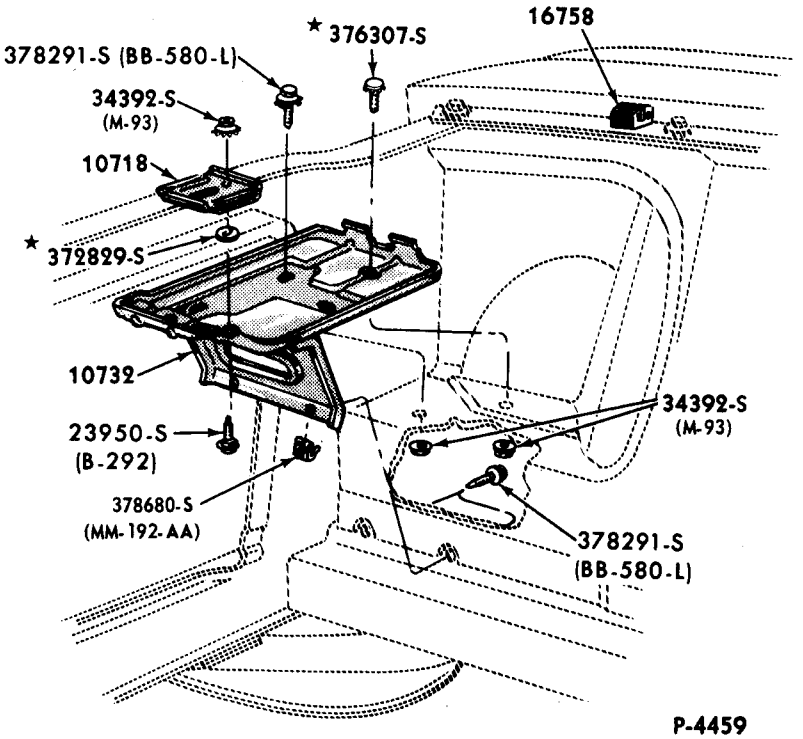

BATTERY CARRIER and RELATED PARTS
1965/68 MUSTANG

COPYRIGHT © 1975 — FORD MOTOR COMPANY — DEARBORN, MICHIGAN

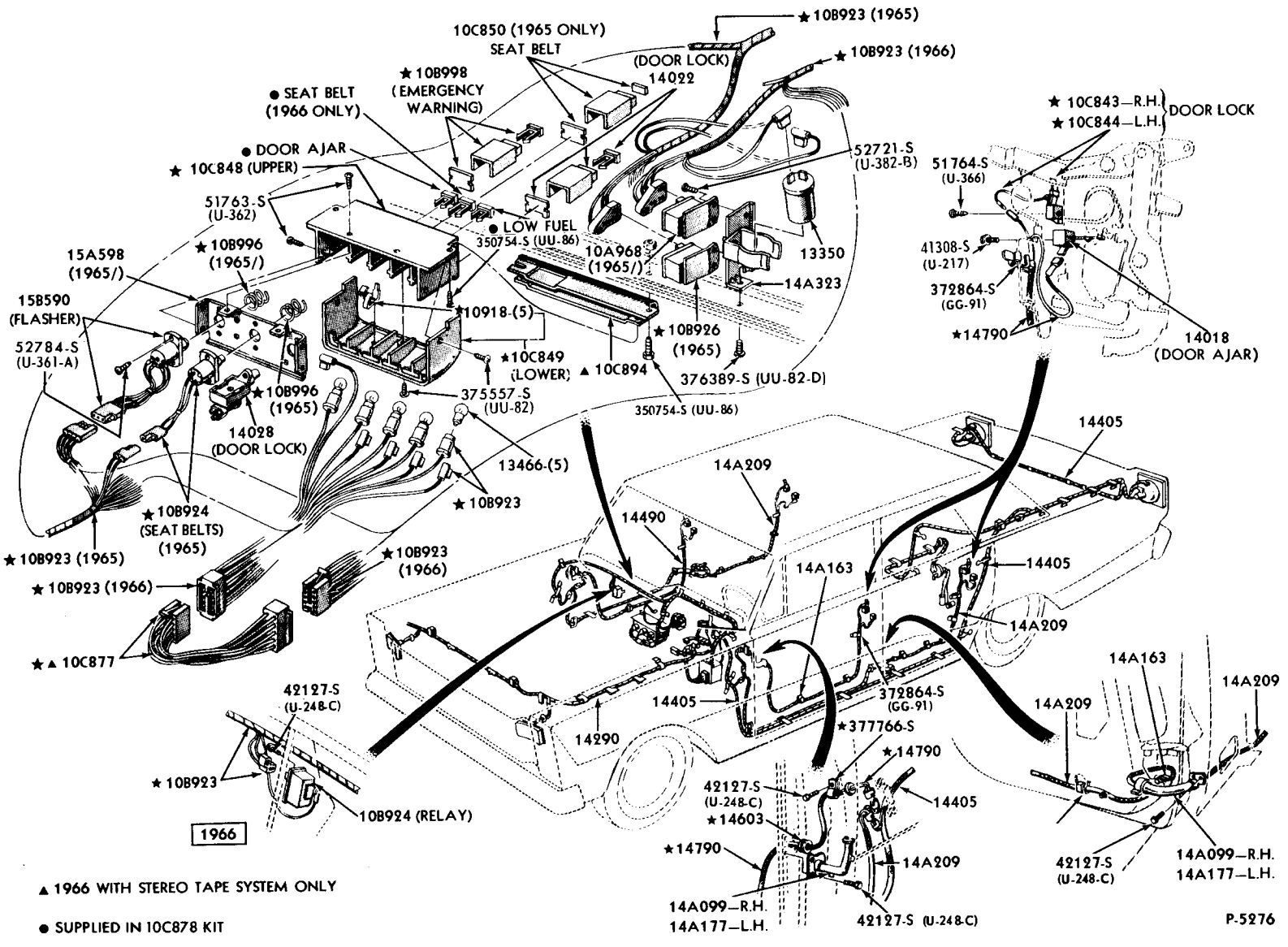

▲ 1966 WITH STEREO TAPE SYSTEM ONLY

● SUPPLIED IN 10C878 KIT

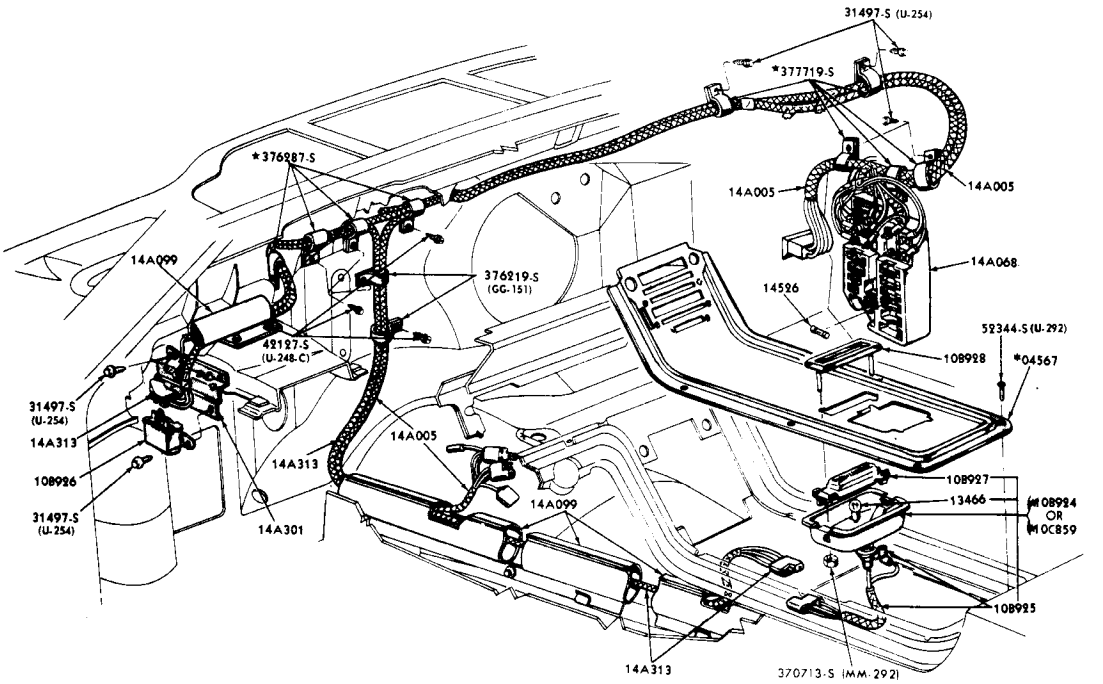

SEAT BELT WARNING LAMP INSTALLATION
1965 THUNDERBIRD - BEFORE 10/5/64

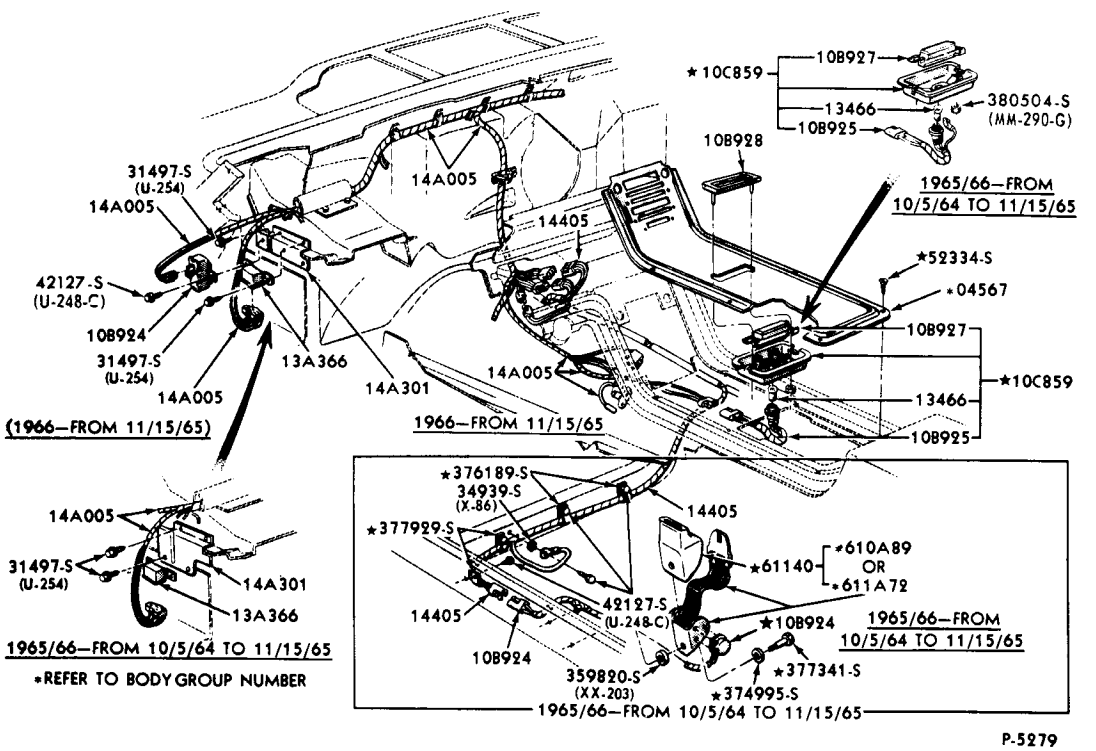

SEAT BELT WARNING LAMP INSTALLATION
1965/66 THUNDERBIRD - FROM 10/5/64

COPYRIGHT © 1975 — FORD MOTOR COMPANY — DEARBORN, MICHIGAN

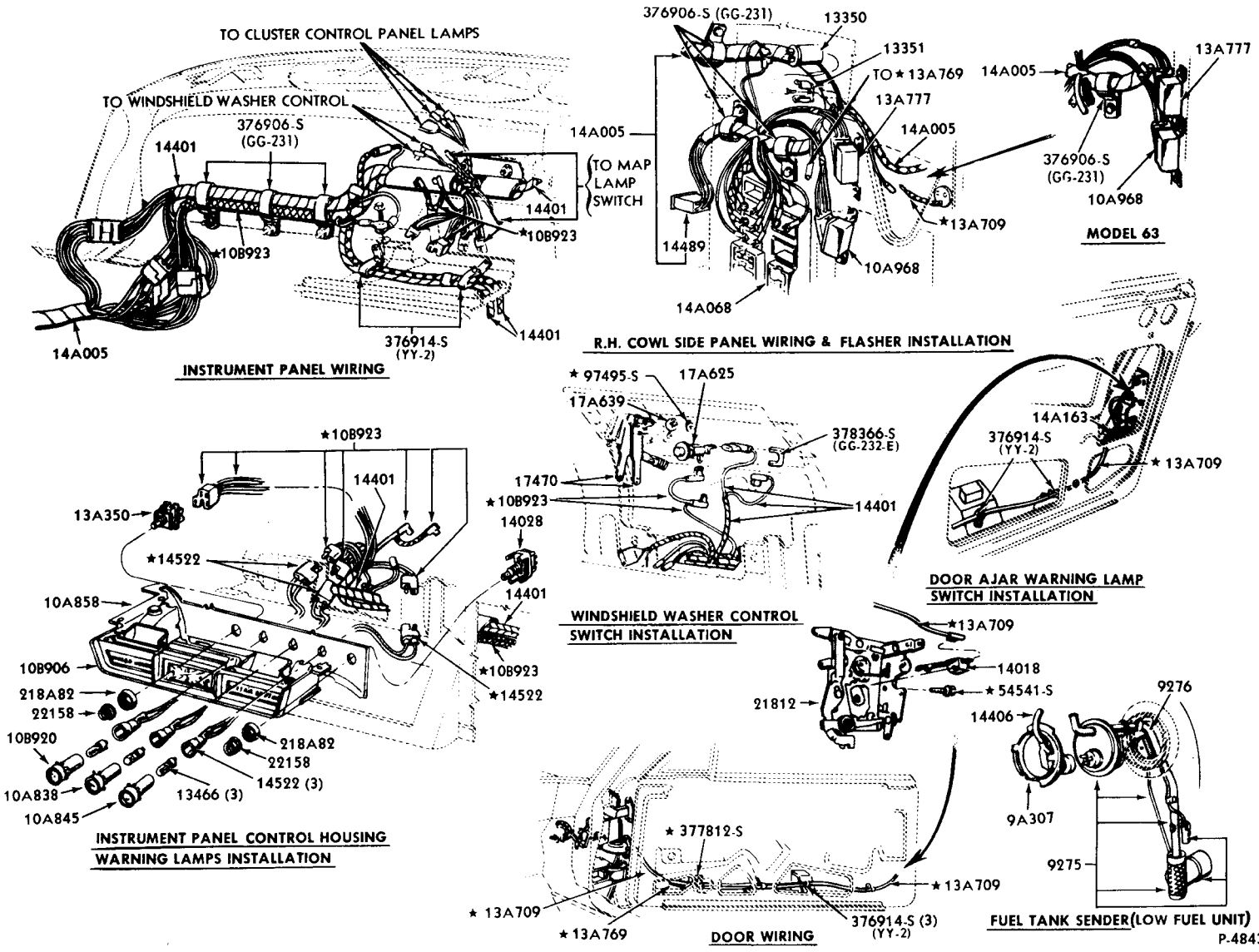

WARNING INDICATOR PANEL and WIRING SYSTEM
DOOR AJAR, LOW FUEL, FLASHER
1965/66 THUNDERBIRD

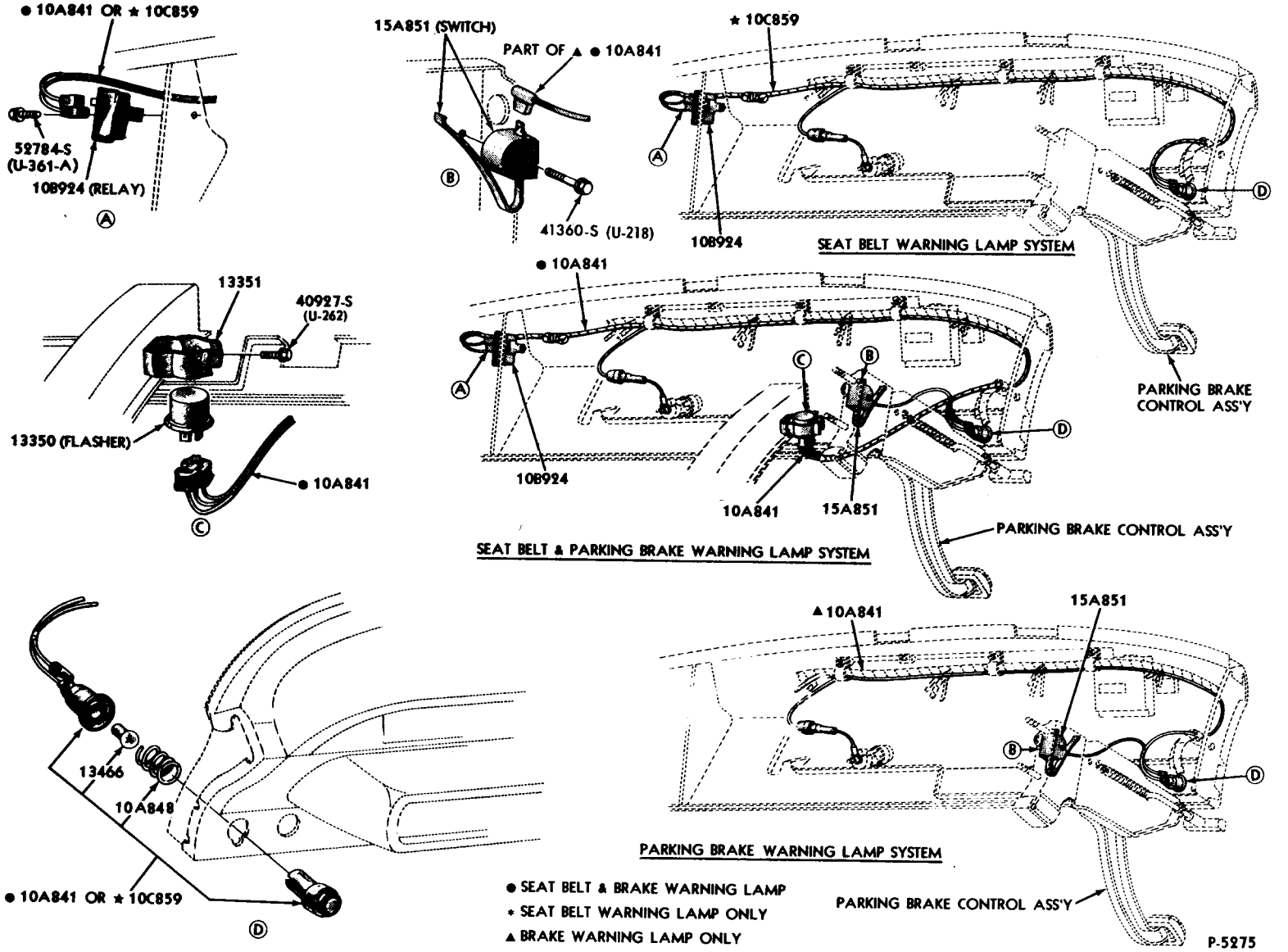

SEAT BELT and PARKING BRAKE WARNING LAMP INSTALLATION
1966 FORD

COPYRIGHT © 1975 — FORD MOTOR COMPANY — DEARBORN, MICHIGAN

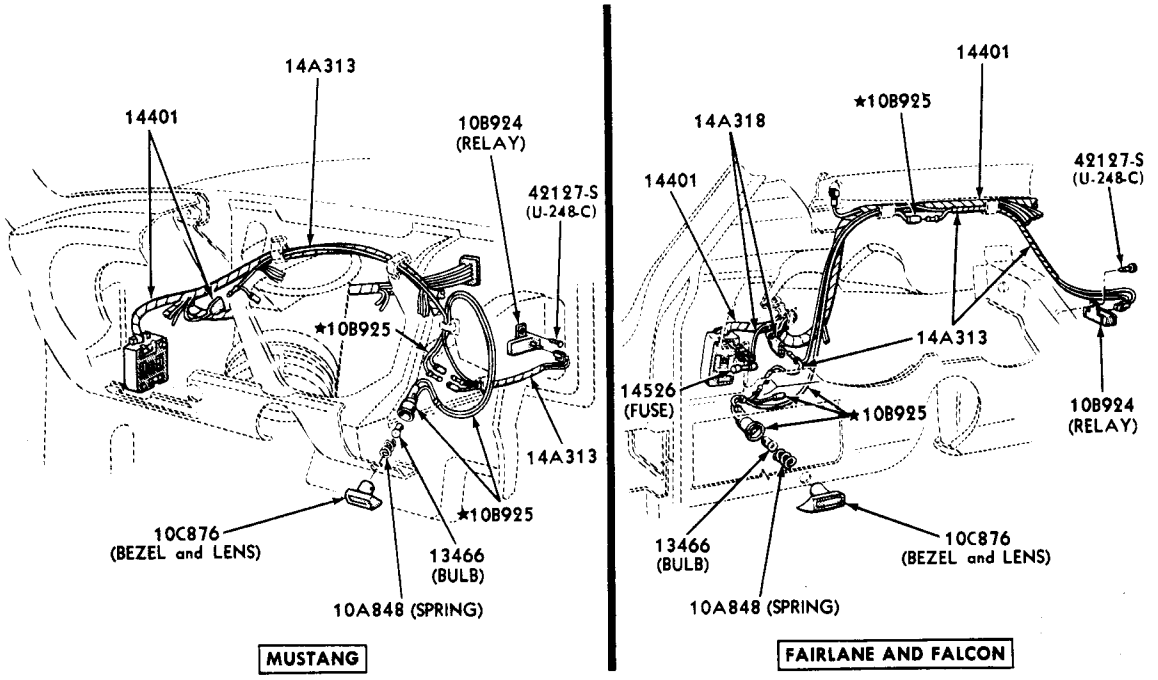

P-5278

SEAT BELT WARNING LAMP INSTALLATION
1966/69 FAIRLANE/TORINO, MUSTANG, FALCON

WARNING LAMP INSTALLATION - ROOF CONSOLE PANEL
1966 THUNDERBIRD - BODY TYPE 63C,63D

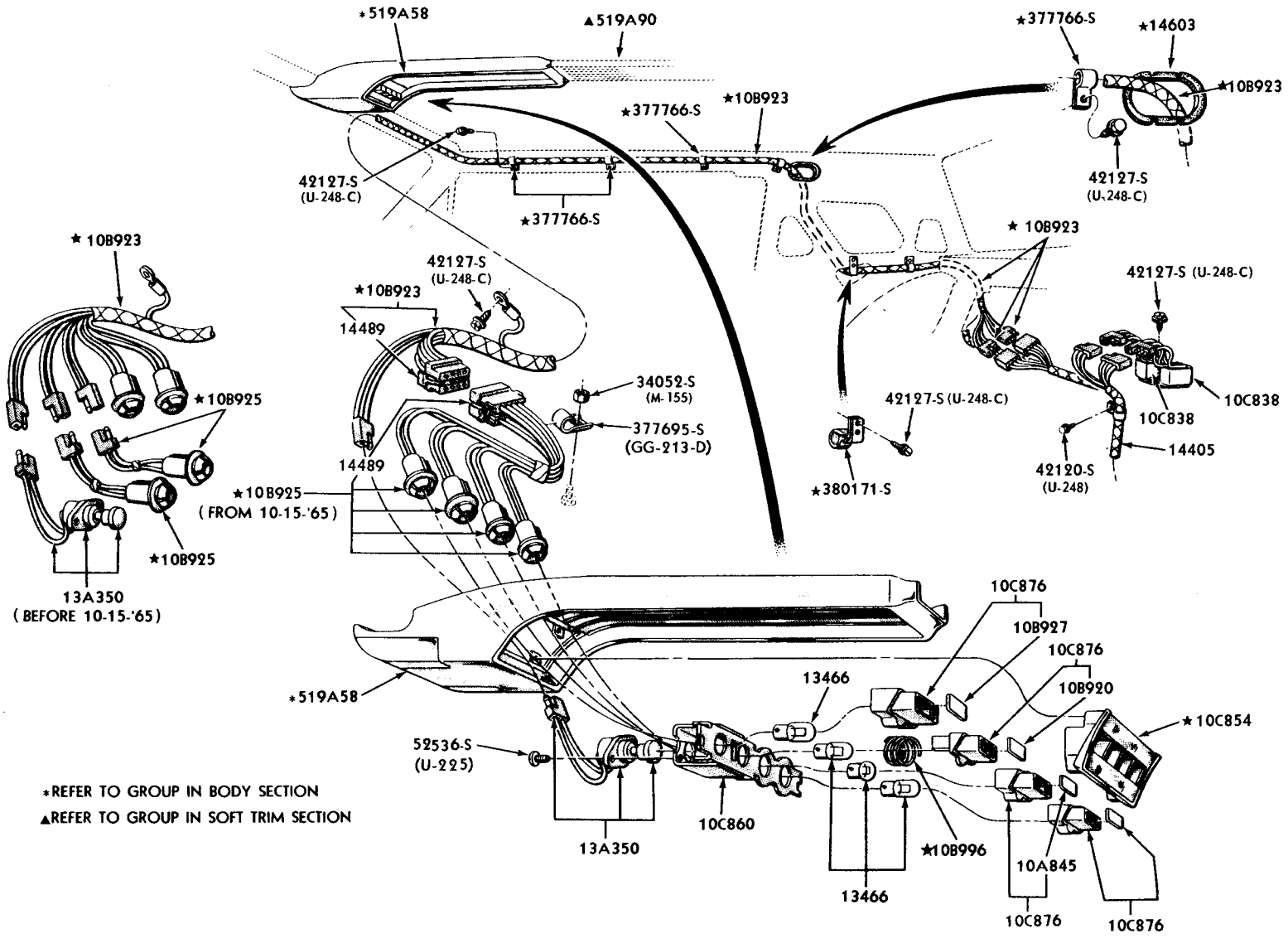

P-5139

COPYRIGHT © 1975 — FORD MOTOR COMPANY — DEARBORN, MICHIGAN

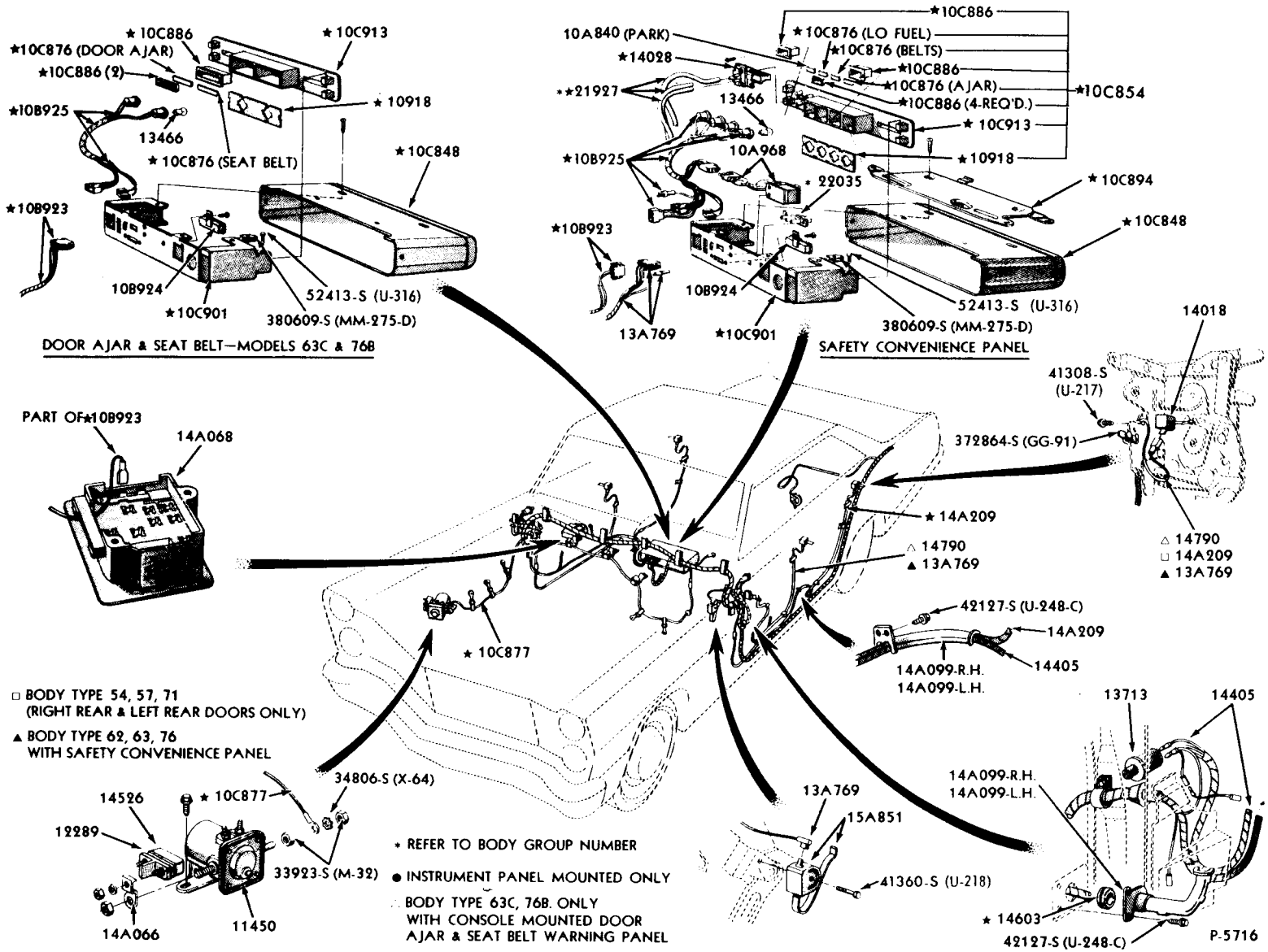
★10C886
★10C876 (DOOR AJAR)
★10C886 (2)
★10C913
★10918
★10B925
13466
★10C876 (SEAT BELT)
★10C848
★10B923
10B924
★10C901
52413-S (U-316)
380609-S (MM-275-D)
DOOR AJAR & SEAT BELT—MODELS 63C & 76B
10A840 (PARK)
★14028
★★21927
13466
★10C876 (LO FUEL)
★10C876 (BELTS)
★10C886
★10C876 (AJAR)
★10C886 (4-REQ'D.)
★10C854
★10C913
★10918
10A968
★10B925
★ 22035
★10C894
★10B923
★10C848
10B924
13A769
★10C901
52413-S (U-316)
380609-S (MM-275-D)
SAFETY CONVENIENCE PANEL
14018
41308-S
(U-217)
372864-S (GG-91)
PART OF★10B923
14A068
★ 14A209
△ 14790
▲ 13A769
△ 14790
□ 14A209
▲ 13A769
42127-S (U-248-C)
14A209
14405
14A099-R.H.
14A099-L.H.
★ 10C877
□ BODY TYPE 54, 57, 71
(RIGHT REAR & LEFT REAR DOORS ONLY)
▲ BODY TYPE 62, 63, 76
WITH SAFETY CONVENIENCE PANEL
34806-S (X-64)
14526
★ 10C877
12289
33923-S (M-32)
14A066
11450
★ REFER TO BODY GROUP NUMBER
● INSTRUMENT PANEL MOUNTED ONLY
BODY TYPE 63C, 76B. ONLY
WITH CONSOLE MOUNTED DOOR
AJAR & SEAT BELT WARNING PANEL
13A769
15A851
41360-S (U-218)
13713
14405
14A099-R.H.
14A099-L.H.
★ 14603
42127-S (U-248-C)
P-5716

WARNING INDICATOR PANEL INSTALLATION
1967/68 MUSTANG

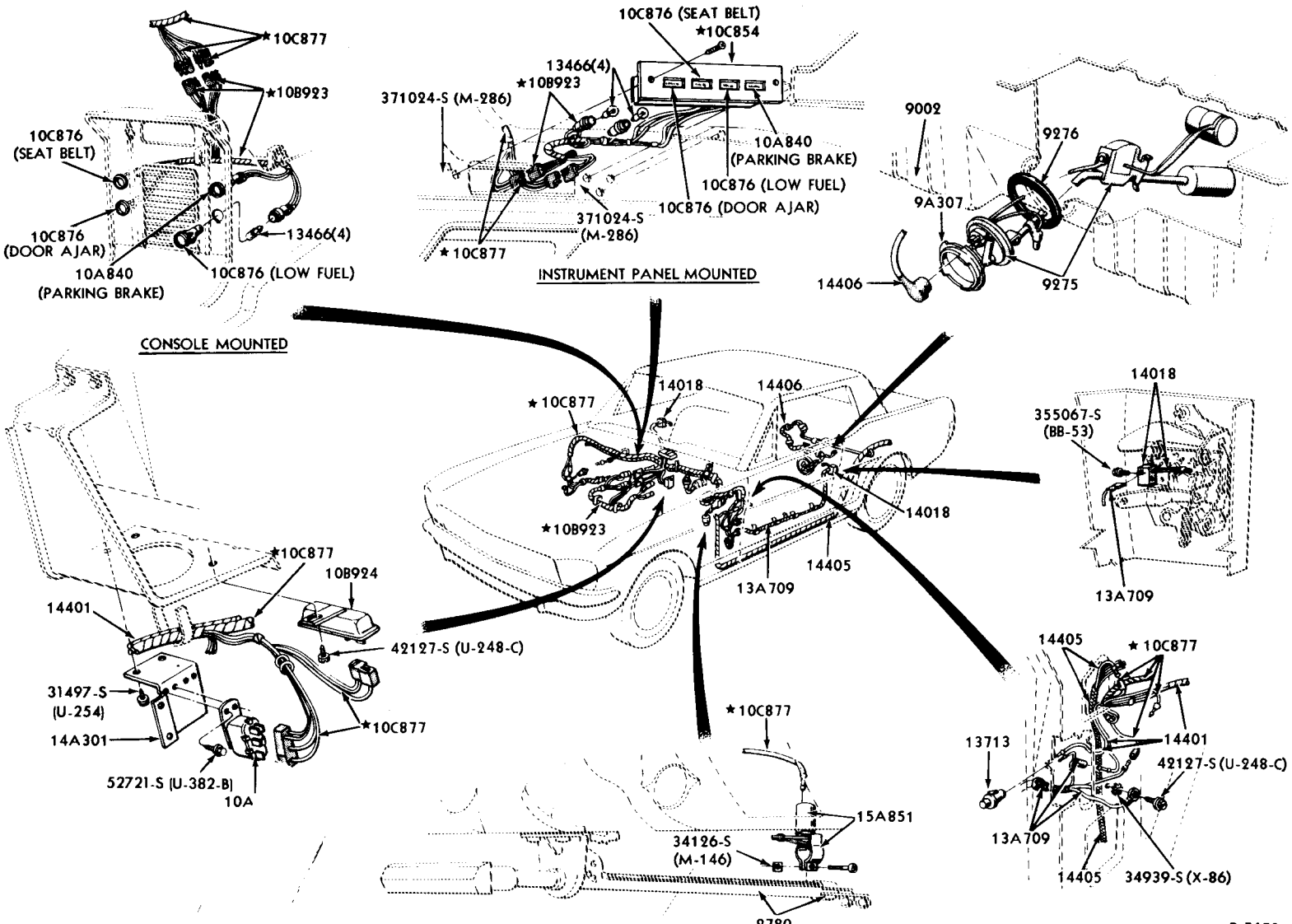

COPYRIGHT © 1975 — FORD MOTOR COMPANY — DEARBORN, MICHIGAN

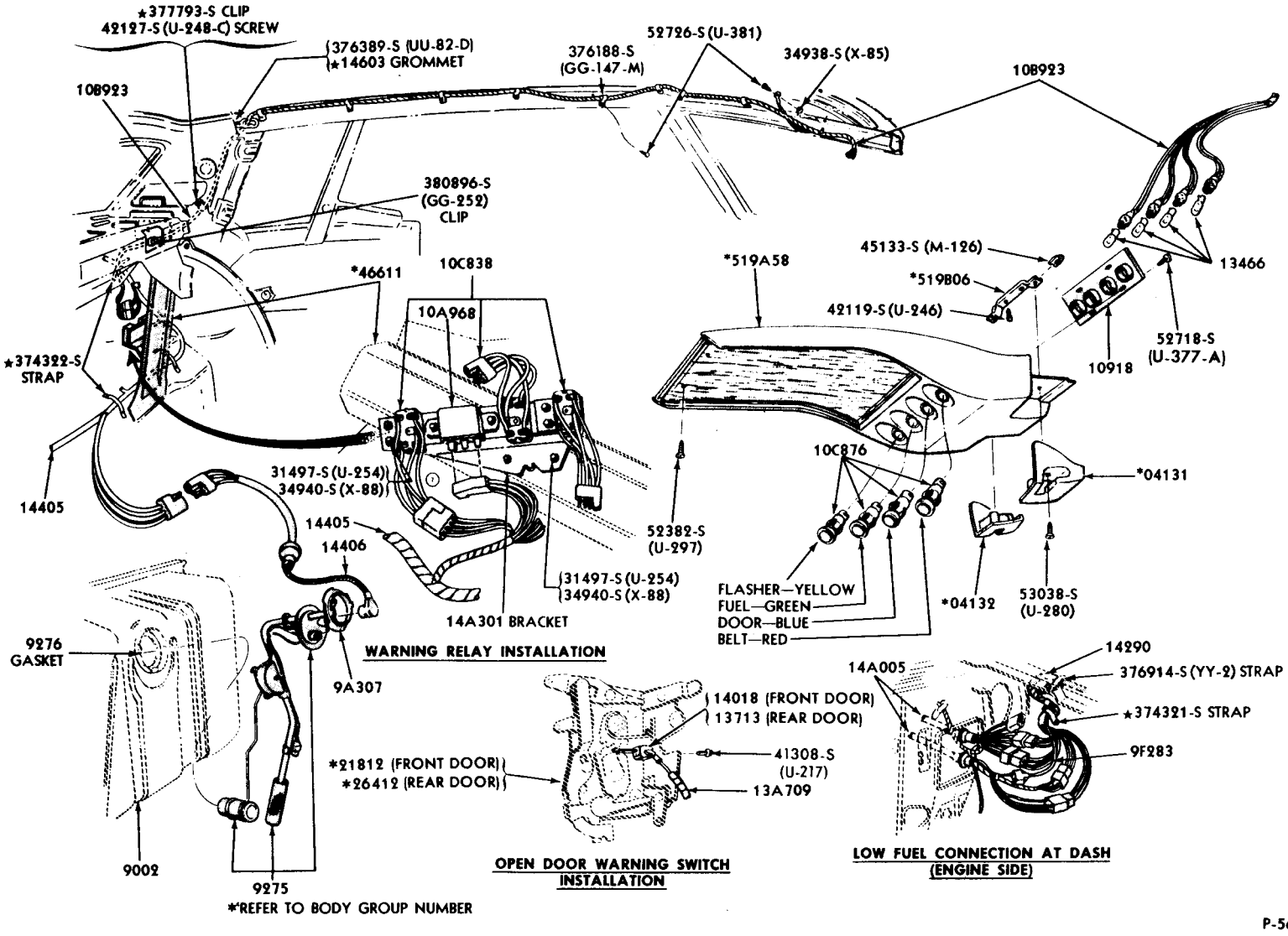
★377793-S CLIP
42127-S (U-248-C) SCREW
376389-S (UU-82-D)
★14603 GROMMET
376188-S
(GG-147-M)
52726-S (U-381)
34938-S (X-85)
108923
108923
380896-S
(GG-252)
CLIP
*46611
10C838
10A968
★374322-S
STRAP
14405
31497-S (U-254)
34940-S (X-88)
14405
14406
31497-S (U-254)
34940-S (X-88)
14A301 BRACKET
WARNING RELAY INSTALLATION
9276
GASKET
9A307
9002
9275
*REFER TO BODY GROUP NUMBER
*519A58
45133-S (M-126)
*519B06
42119-S (U-246)
13466
52718-S
(U-377-A)
10918
10C876
*04131
52382-S
(U-297)
FLASHER—YELLOW
FUEL—GREEN
DOOR—BLUE
BELT—RED
*04132
53038-S
(U-280)
14018 (FRONT DOOR)
13713 (REAR DOOR)
*21812 (FRONT DOOR)
*26412 (REAR DOOR)
41308-S
(U-217)
13A709
OPEN DOOR WARNING SWITCH
INSTALLATION
14A005
14290
376914-S (YY-2) STRAP
★374321-S STRAP
9F283
LOW FUEL CONNECTION AT DASH
(ENGINE SIDE)

P-5658

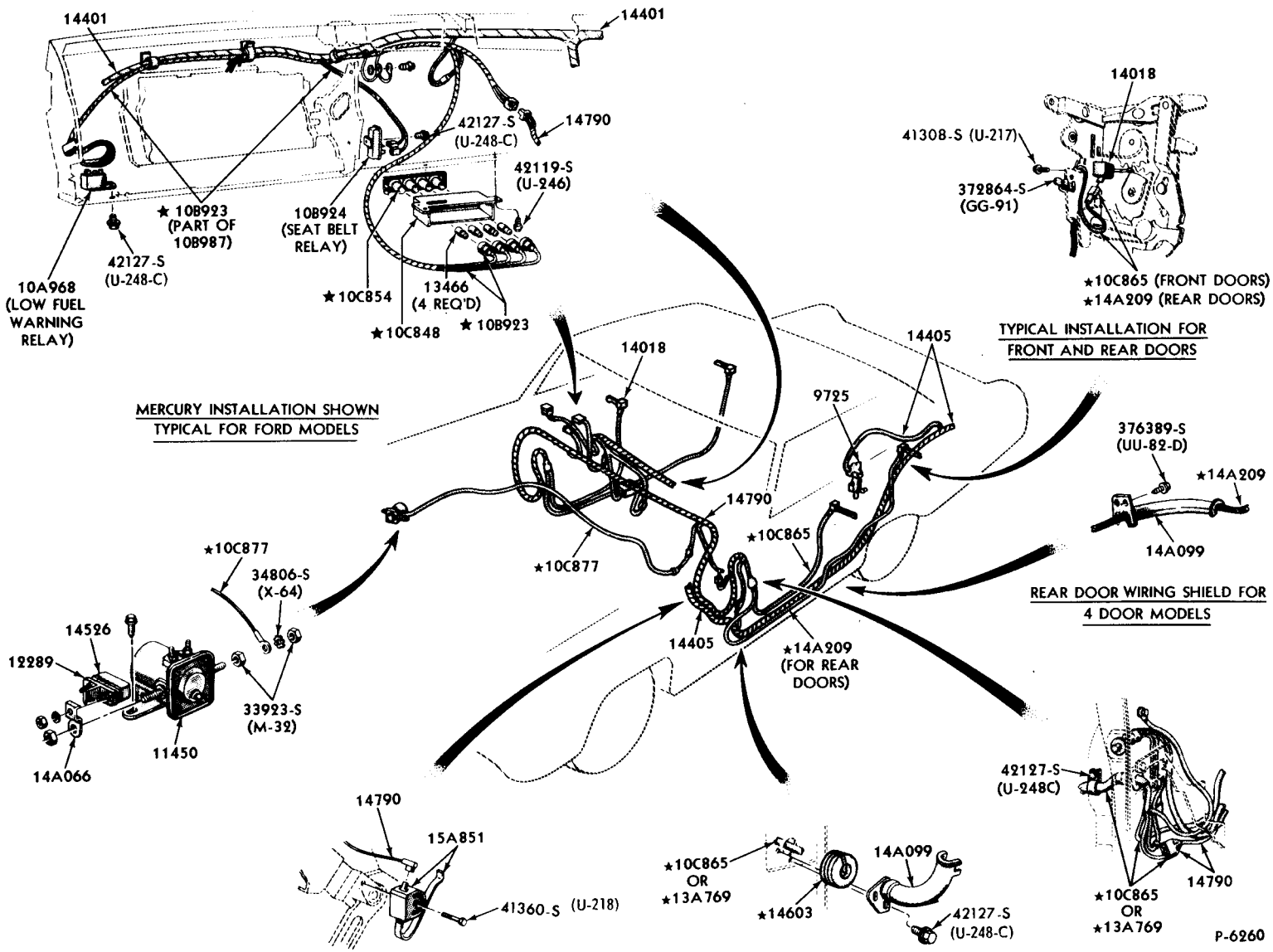

WARNING INDICATOR PANEL and WIRING SYSTEM
1968 FORD

COPYRIGHT © 1975 — FORD MOTOR COMPANY — DEARBORN, MICHIGAN

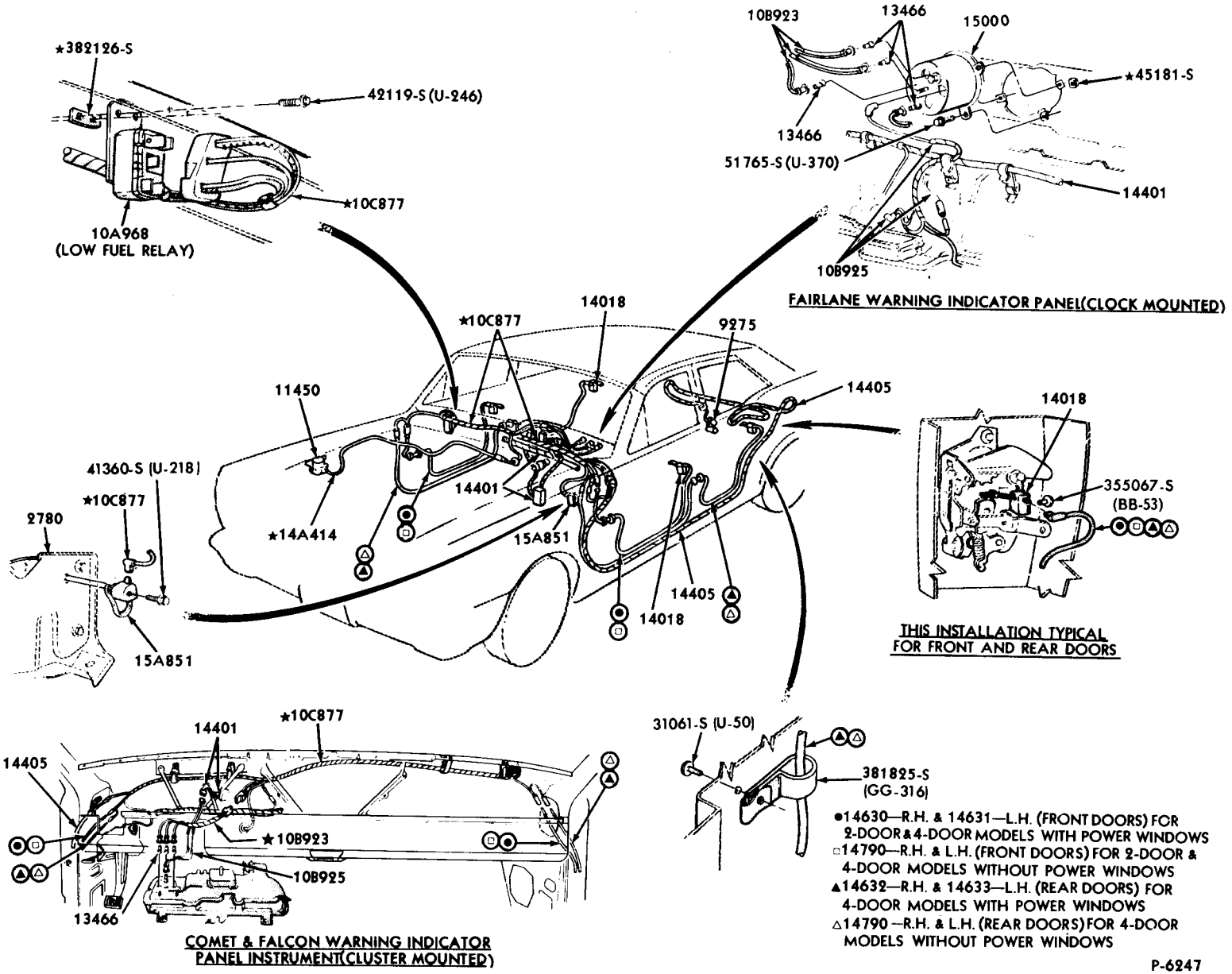
★382126-S
42119-S (U-246)
★10C877
10A968
(LOW FUEL RELAY)
10B923
13466
15000
★45181-S
13466
51765-S (U-370)
14401
10B925
FAIRLANE WARNING INDICATOR PANEL(CLOCK MOUNTED)
14018
★10C877
9275
11450
14405
14018
41360-S (U-218)
★10C877
2780
★14A414
14401
15A851
355067-S
(BB-53)
14405
14018
15A851
THIS INSTALLATION TYPICAL
FOR FRONT AND REAR DOORS
★10C877
14401
14405
★10B923
10B925
13466
COMET & FALCON WARNING INDICATOR
PANEL INSTRUMENT(CLUSTER MOUNTED)
31061-S (U-50)
381825-S
(GG-316)
●14630—R.H. & 14631—L.H. (FRONT DOORS) FOR 2-DOOR & 4-DOOR MODELS WITH POWER WINDOWS
□14790—R.H. & L.H. (FRONT DOORS) FOR 2-DOOR & 4-DOOR MODELS WITHOUT POWER WINDOWS
▲14632—R.H. & 14633—L.H. (REAR DOORS) FOR 4-DOOR MODELS WITH POWER WINDOWS
△14790—R.H. & L.H. (REAR DOORS) FOR 4-DOOR MODELS WITHOUT POWER WINDOWS
P-6247

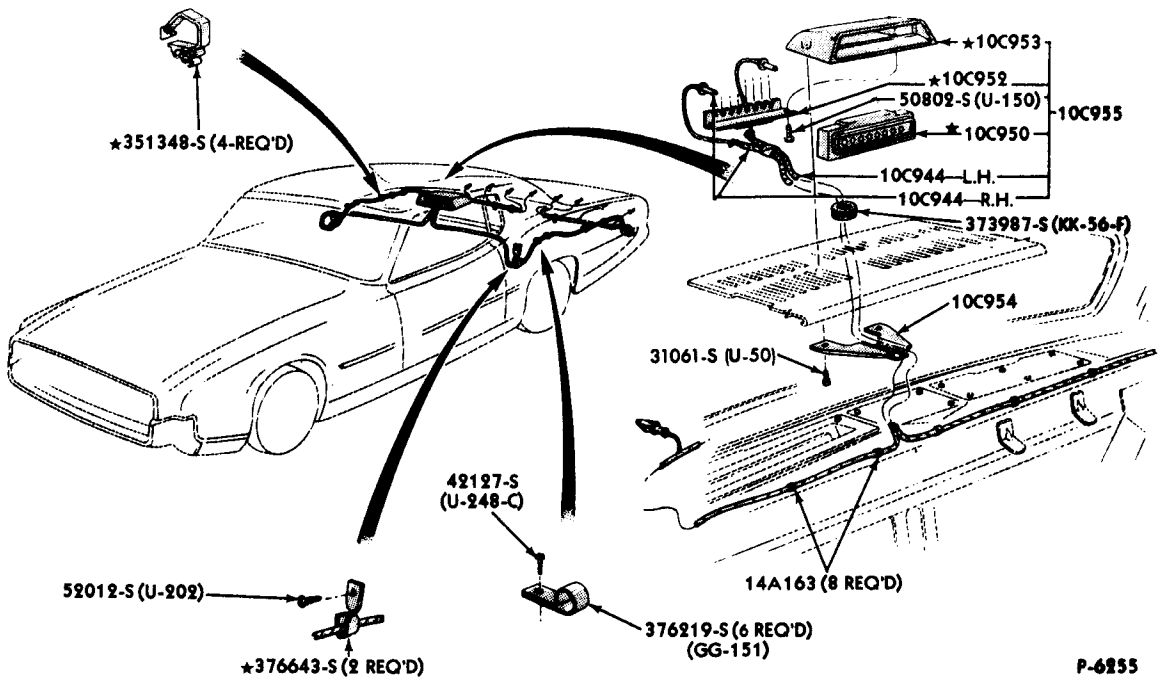

MONITOR SYSTEM - TAIL LAMP FAILURE
1968/69 THUNDERBIRD

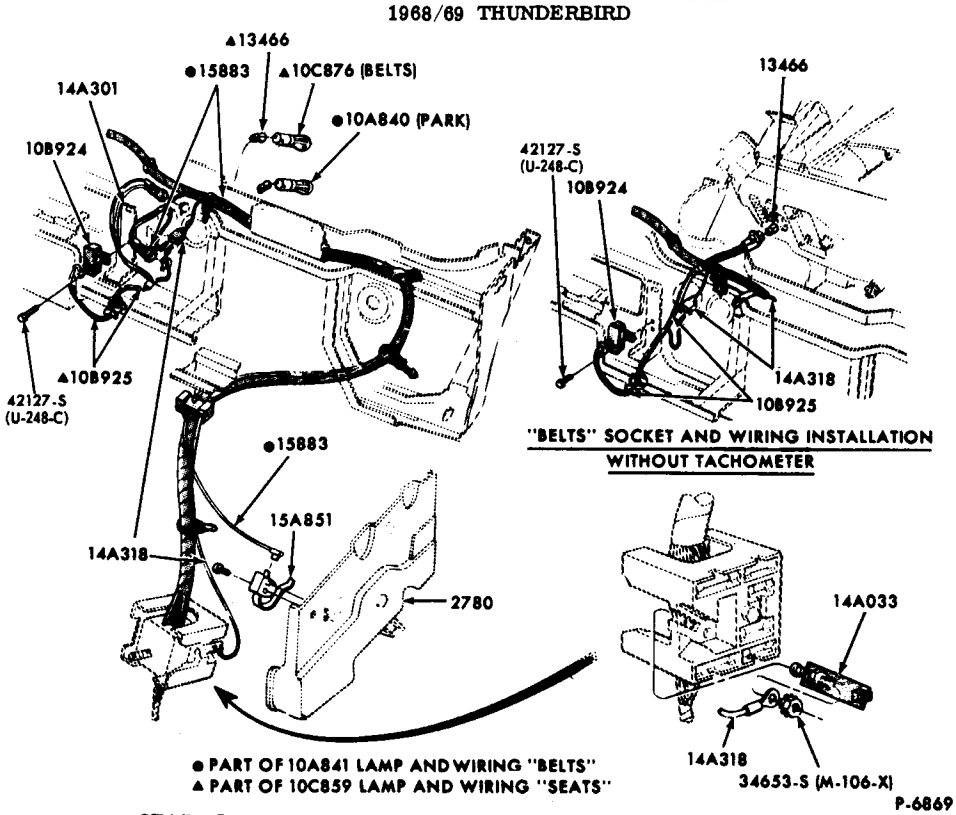

SEAT BELT and PARKING BRAKE WARNING LAMP INSTALLATION
1969/70 MUSTANG

COPYRIGHT © 1975 — FORD MOTOR COMPANY — DEARBORN, MICHIGAN

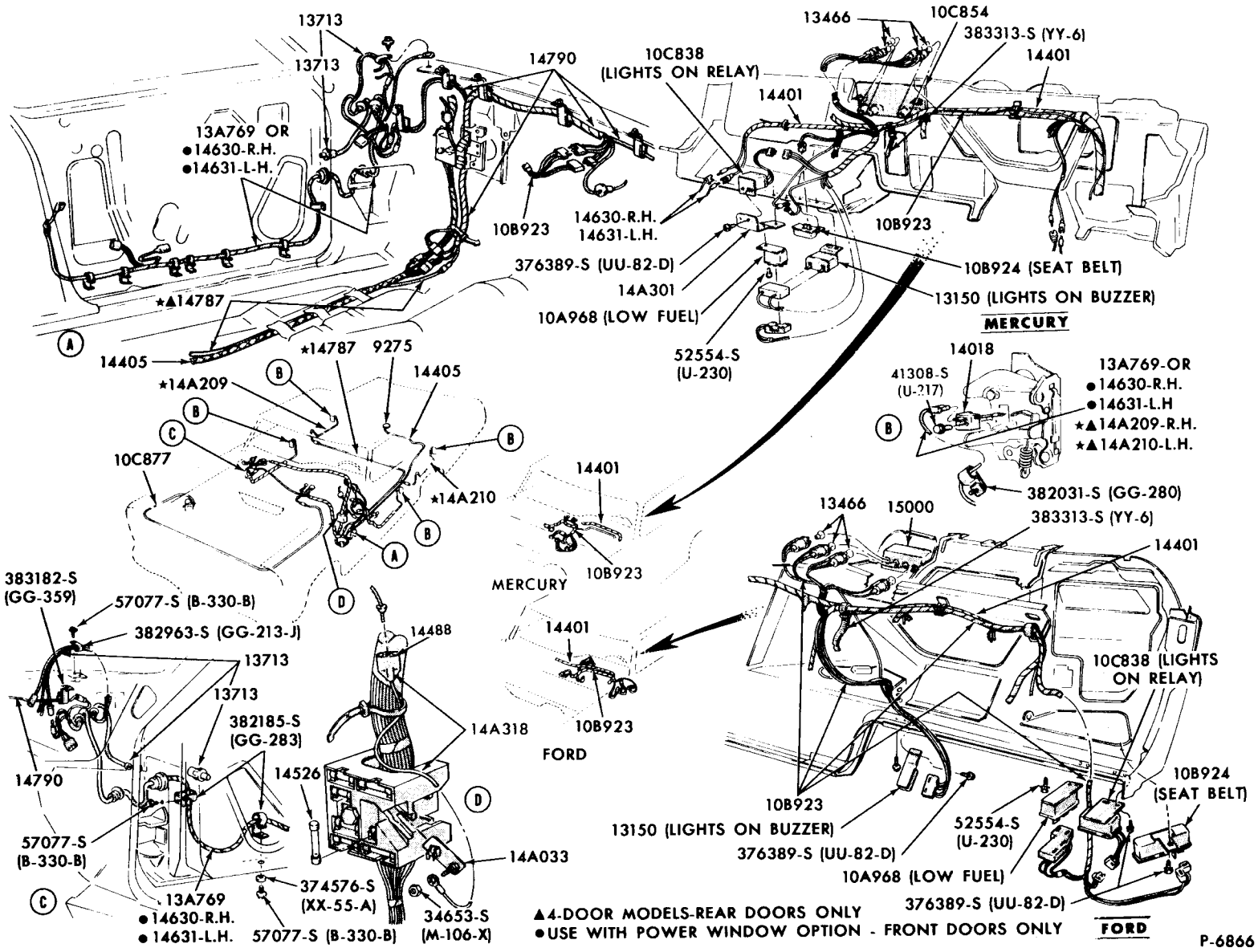
13713
13713
14790
10C838 (LIGHTS ON RELAY)
13466
10C854
383313-S (YY-6)
14401
14401
13A769 OR
●14630-R.H.
●14631-L.H.
10B923
14630-R.H.
14631-L.H.
10B923
376389-S (UU-82-D)
14A301
10A968 (LOW FUEL)
52554-S (U-230)
10B924 (SEAT BELT)
13150 (LIGHTS ON BUZZER)
MERCURY
★▲14787
A
14405
★14787
9275
14405
★14A209
B
B
C
10C877
★14A210
B
A
D
14018
41308-S (U-217)
13A769-OR
●14630-R.H.
●14631-L.H
★▲14A209-R.H.
★▲14A210-L.H.
B
382031-S (GG-280)
14401
10B923
MERCURY
13466
15000
383313-S (YY-6)
14401
383182-S (GG-359)
57077-S (B-330-B)
382963-S (GG-213-J)
13713
13713
382185-S (GG-283)
14790
57077-S (B-330-B)
C
13A769
●14630-R.H.
●14631-L.H.
14488
14A318
14526
374576-S (XX-55-A)
57077-S (B-330-B)
34653-S (M-106-X)
D
14A033
14401
10B923
FORD
10C838 (LIGHTS ON RELAY)
10B923
13150 (LIGHTS ON BUZZER)
376389-S (UU-82-D)
10A968 (LOW FUEL)
52554-S (U-230)
10B924 (SEAT BELT)
376389-S (UU-82-D)
FORD
▲4-DOOR MODELS-REAR DOORS ONLY
●USE WITH POWER WINDOW OPTION - FRONT DOORS ONLY
P-6866

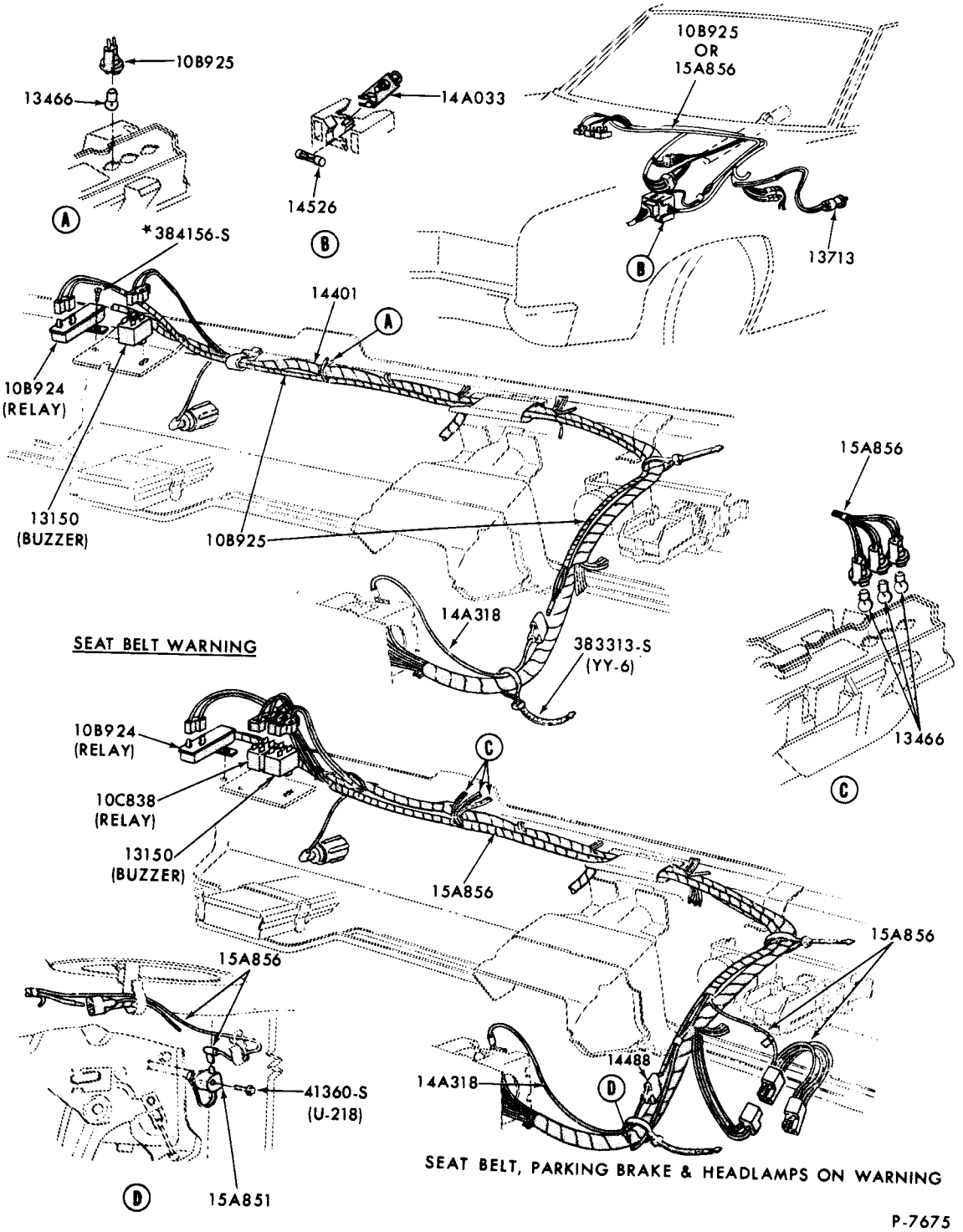

SEAT BELT, PARKING BRAKE & HEADLAMPS ON WARNING

P-7675

WARNING INDICATOR PANEL
1970/71 FAIRLANE/TORINO

COPYRIGHT © 1975 — FORD MOTOR COMPANY — DEARBORN, MICHIGAN

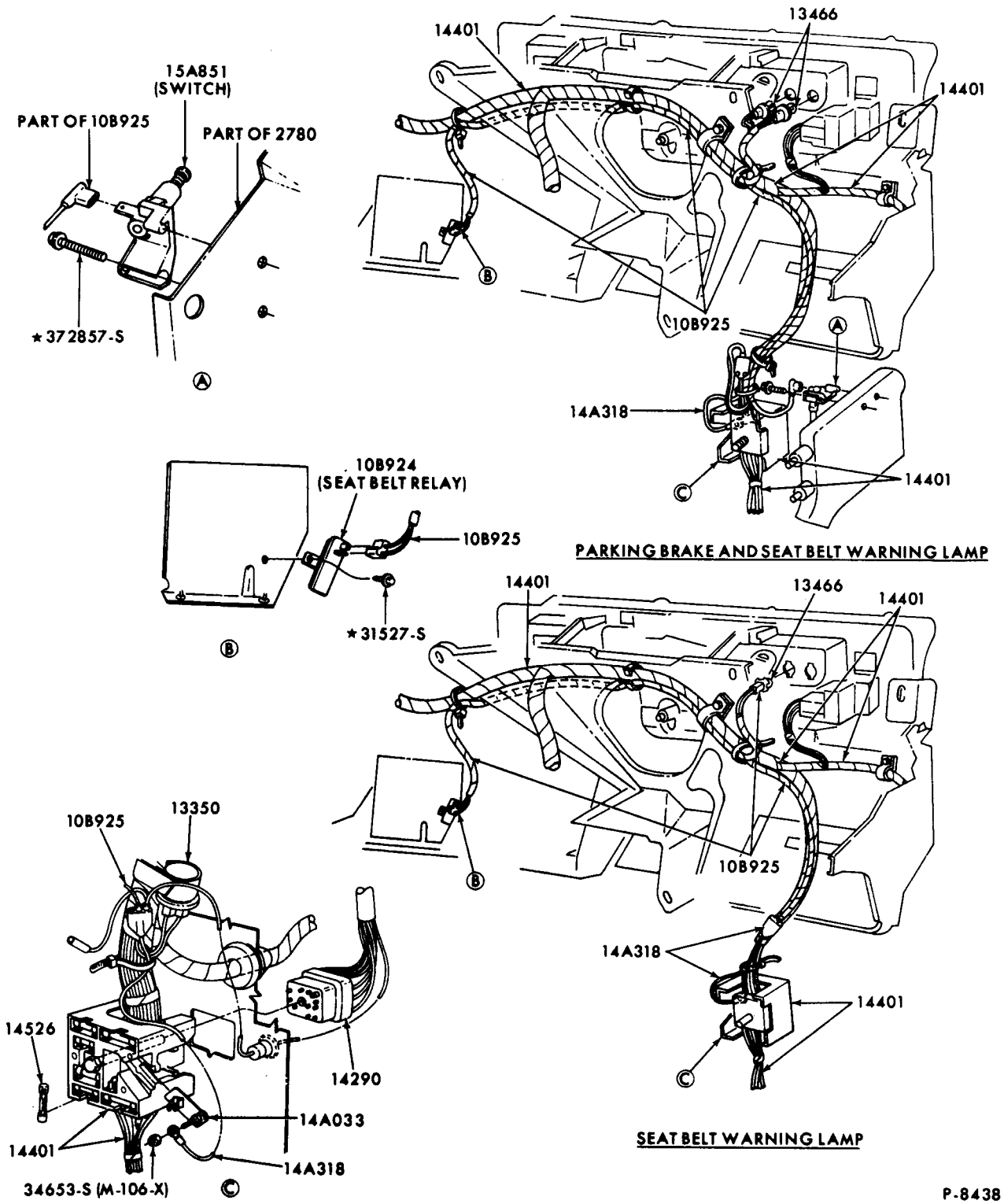

SEAT BELT, PARKING BRAKE WARNING LAMP and RELATED PARTS
1971 FORD

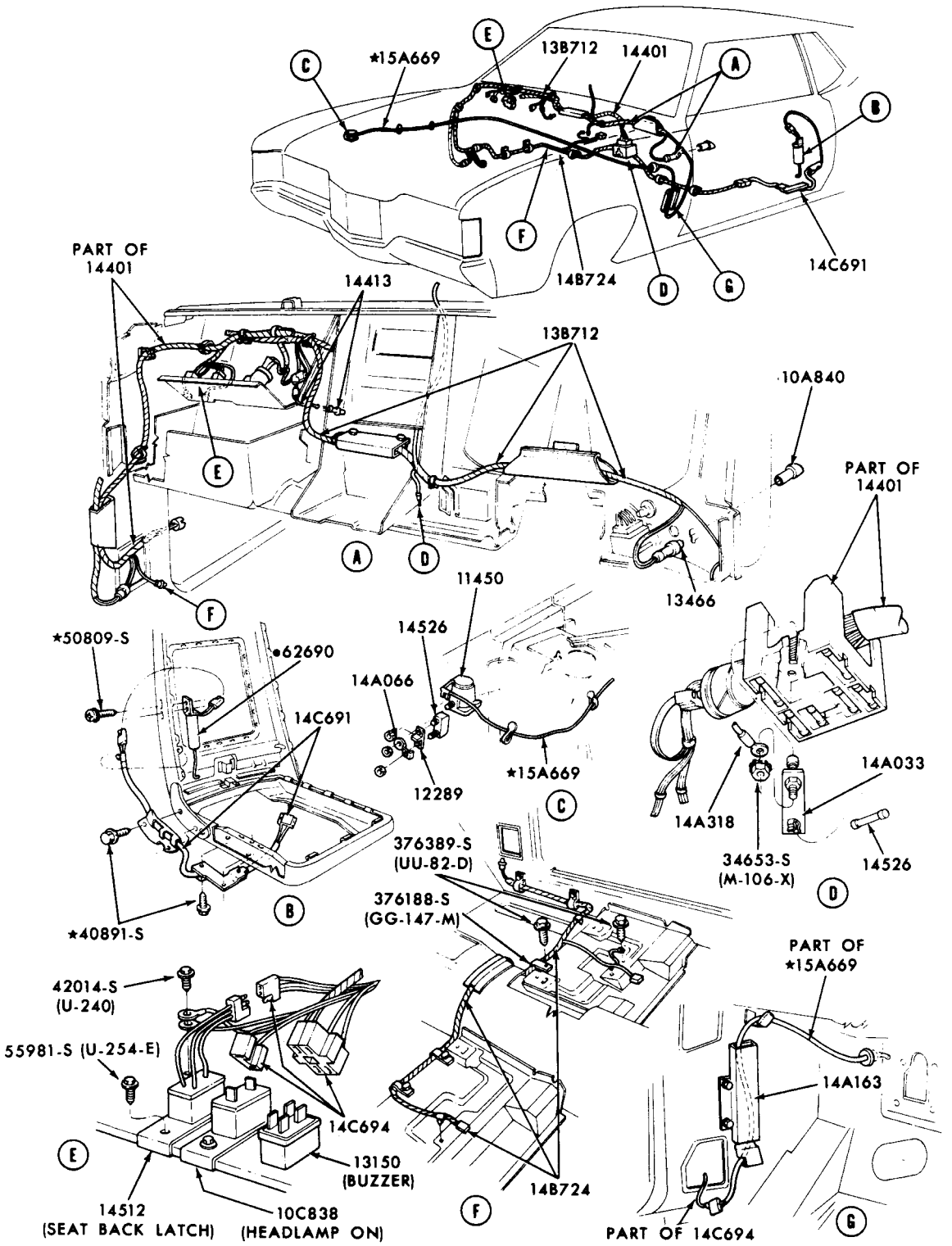

WARNING INDICATOR SYSTEM-SAFETY CONVENIENCE
1971/72 MUSTANG

COPYRIGHT © 1975 — FORD MOTOR COMPANY — DEARBORN, MICHIGAN

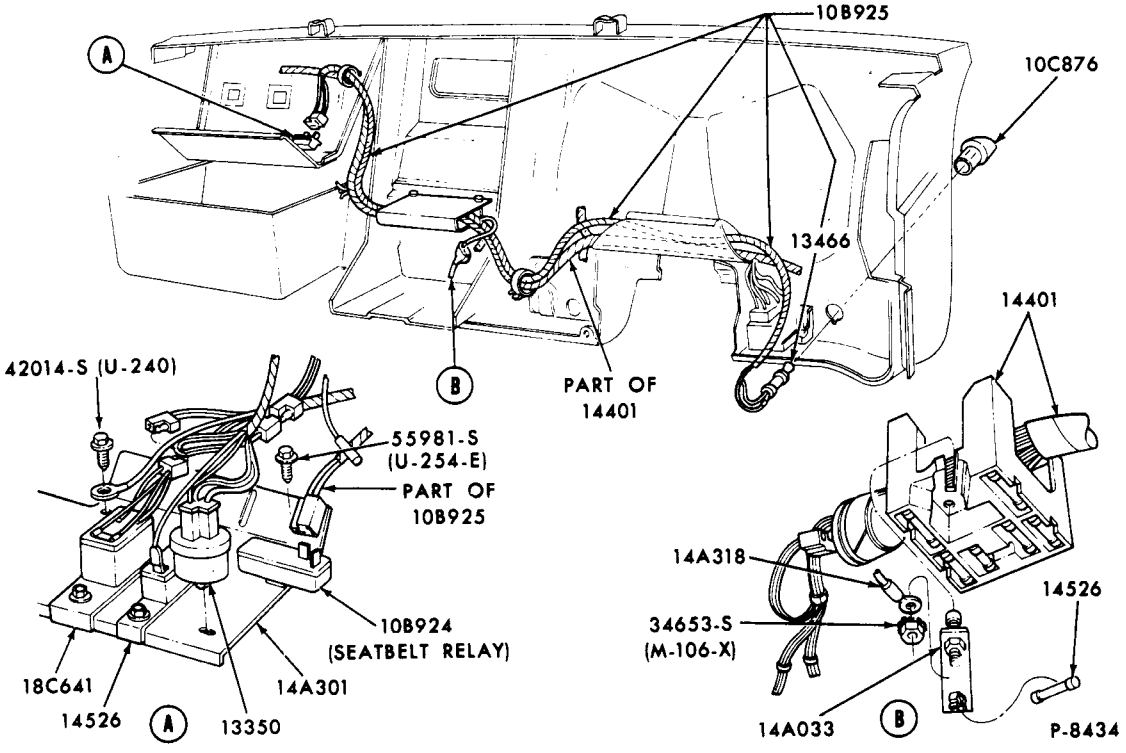

SEAT BELT WARNING LAMP INSTALLATION
1971/72 MUSTANG

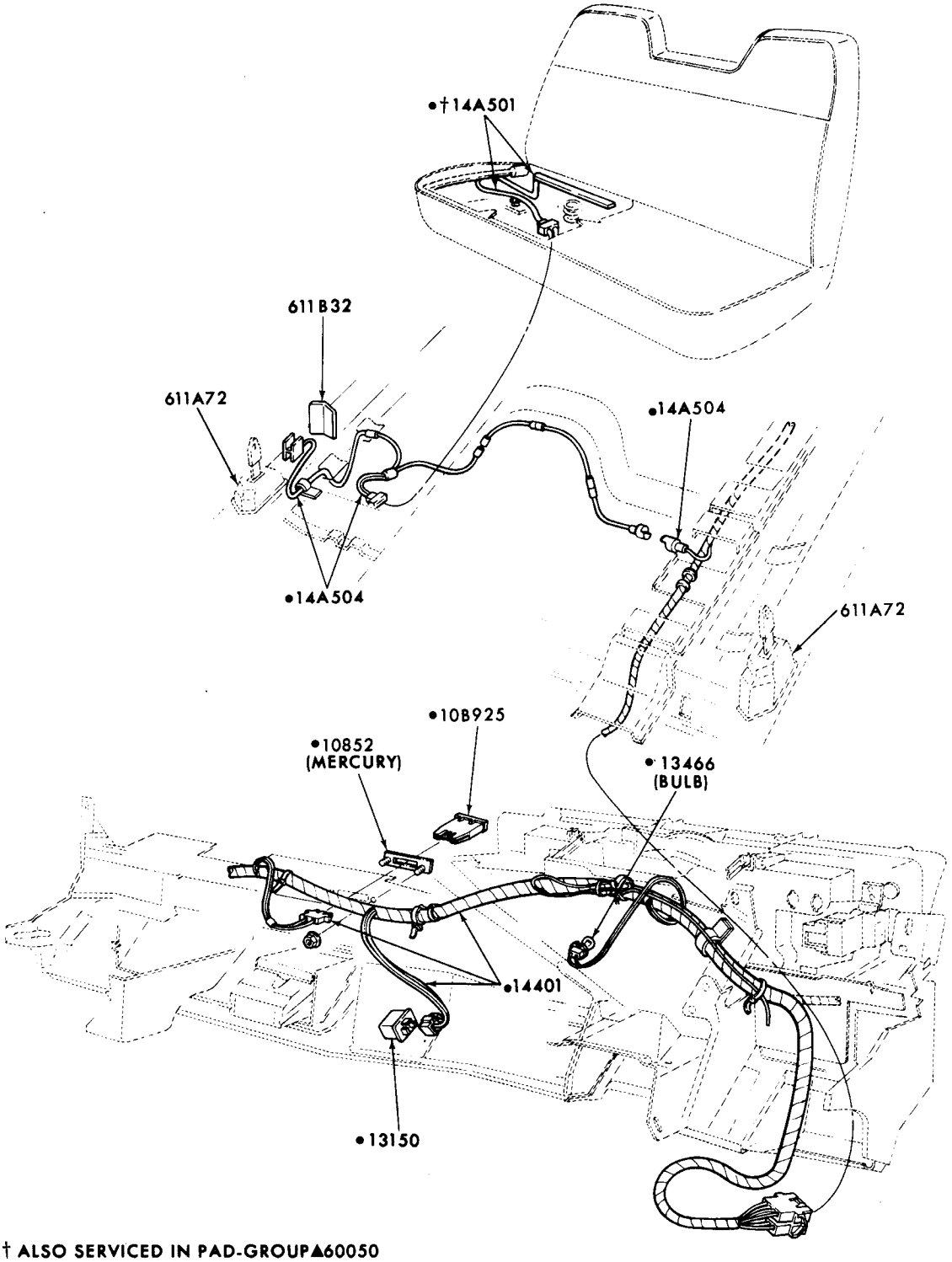

† ALSO SERVICED IN PAD-GROUP▲60050
• REFER TO CHASSIS SECTION
▲REFER TO SOFT TRIM SECTION

P-9260

SEAT BELT WARNING SYSTEM
1972 FORD

COPYRIGHT © 1975 — FORD MOTOR COMPANY — DEARBORN, MICHIGAN

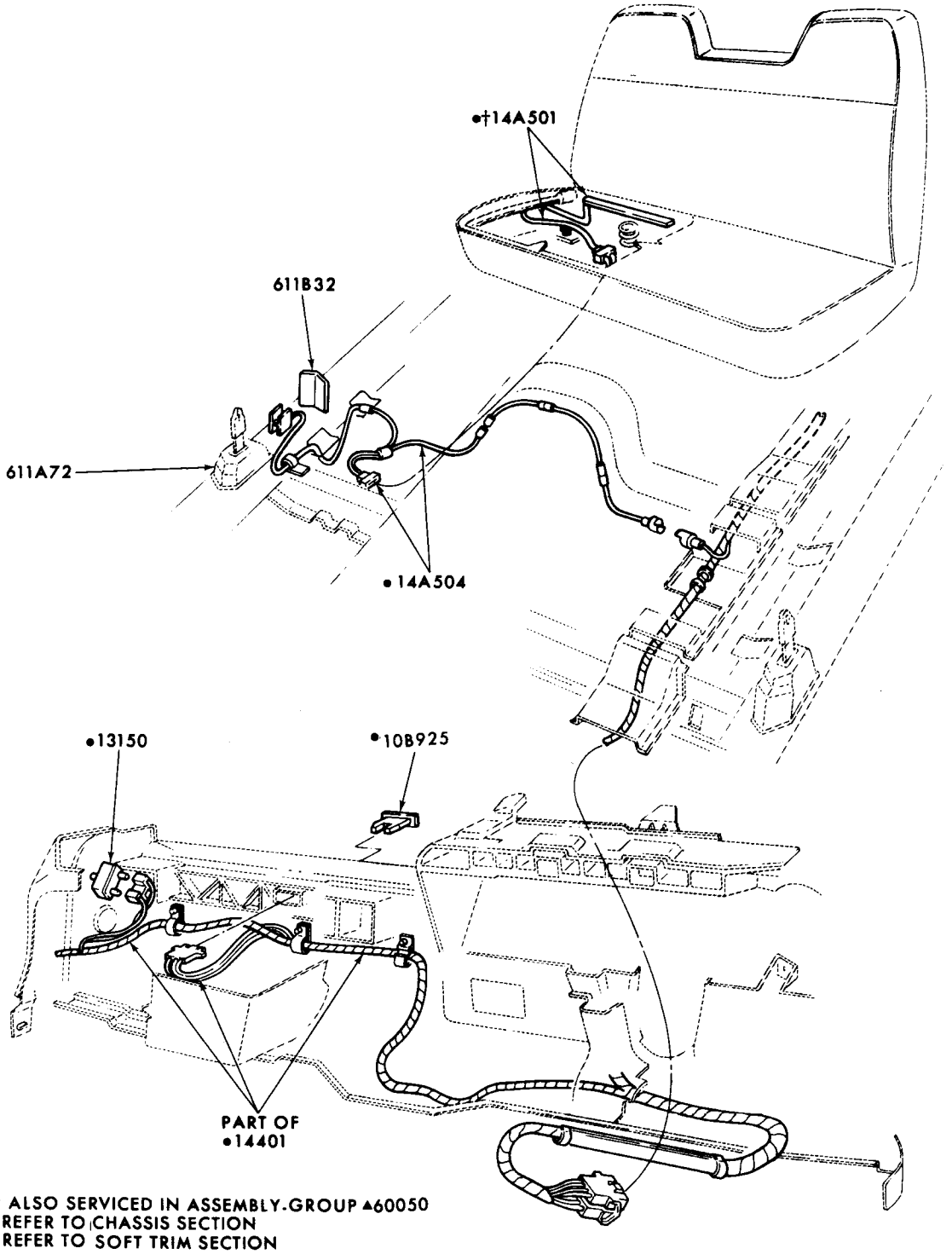

† ALSO SERVICED IN ASSEMBLY-GROUP ▲60050
• REFER TO CHASSIS SECTION
▲ REFER TO SOFT TRIM SECTION

P-9259

SEAT BELT WARNING SYSTEM
1972 TORINO

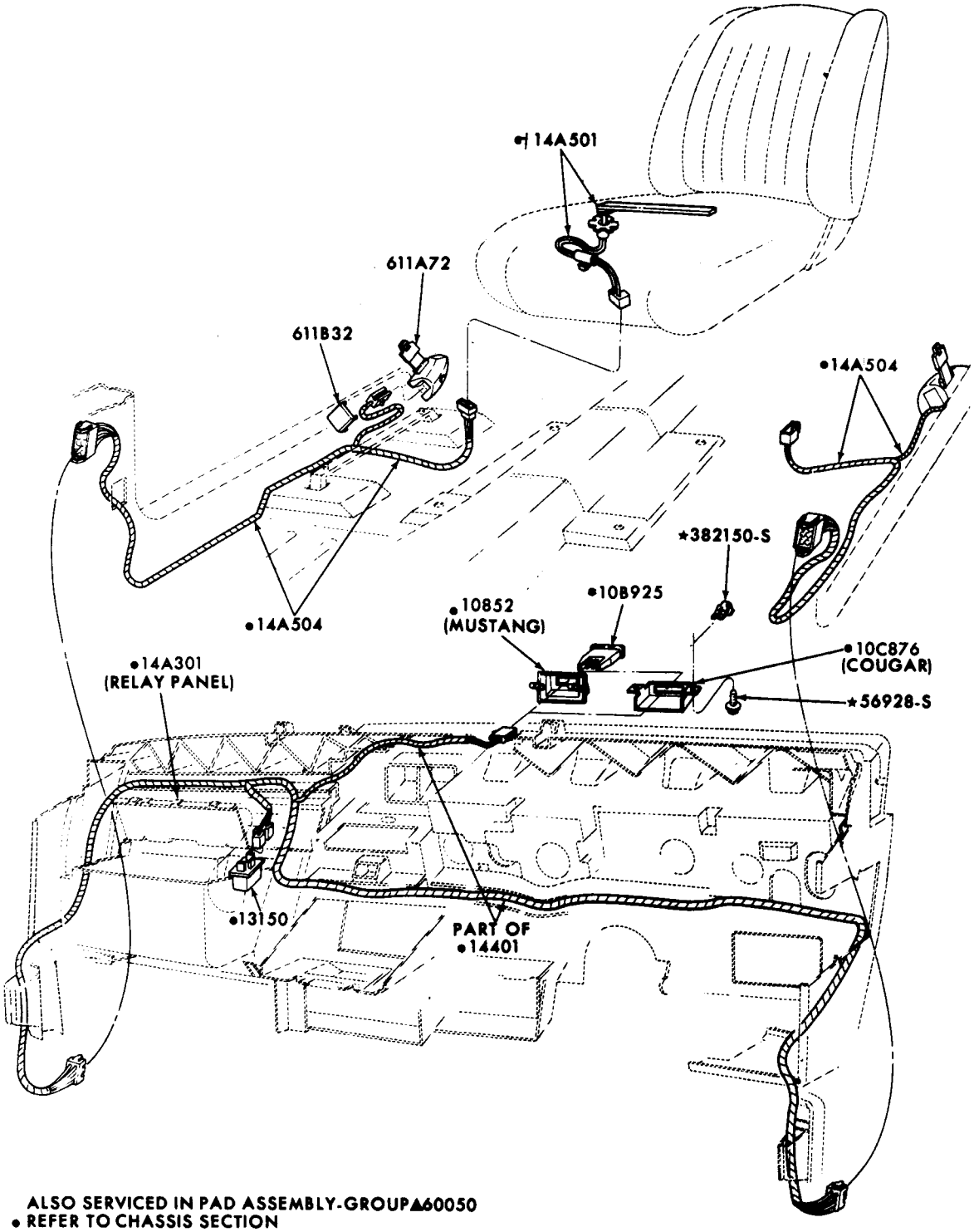

ALSO SERVICED IN PAD ASSEMBLY-GROUP▲60050
• REFER TO CHASSIS SECTION
▲REFER TO BODY SECTION

P-9266

SEAT BELT WARNING SYSTEM
1972 MUSTANG

COPYRIGHT © 1975 — FORD MOTOR COMPANY — DEARBORN, MICHIGAN

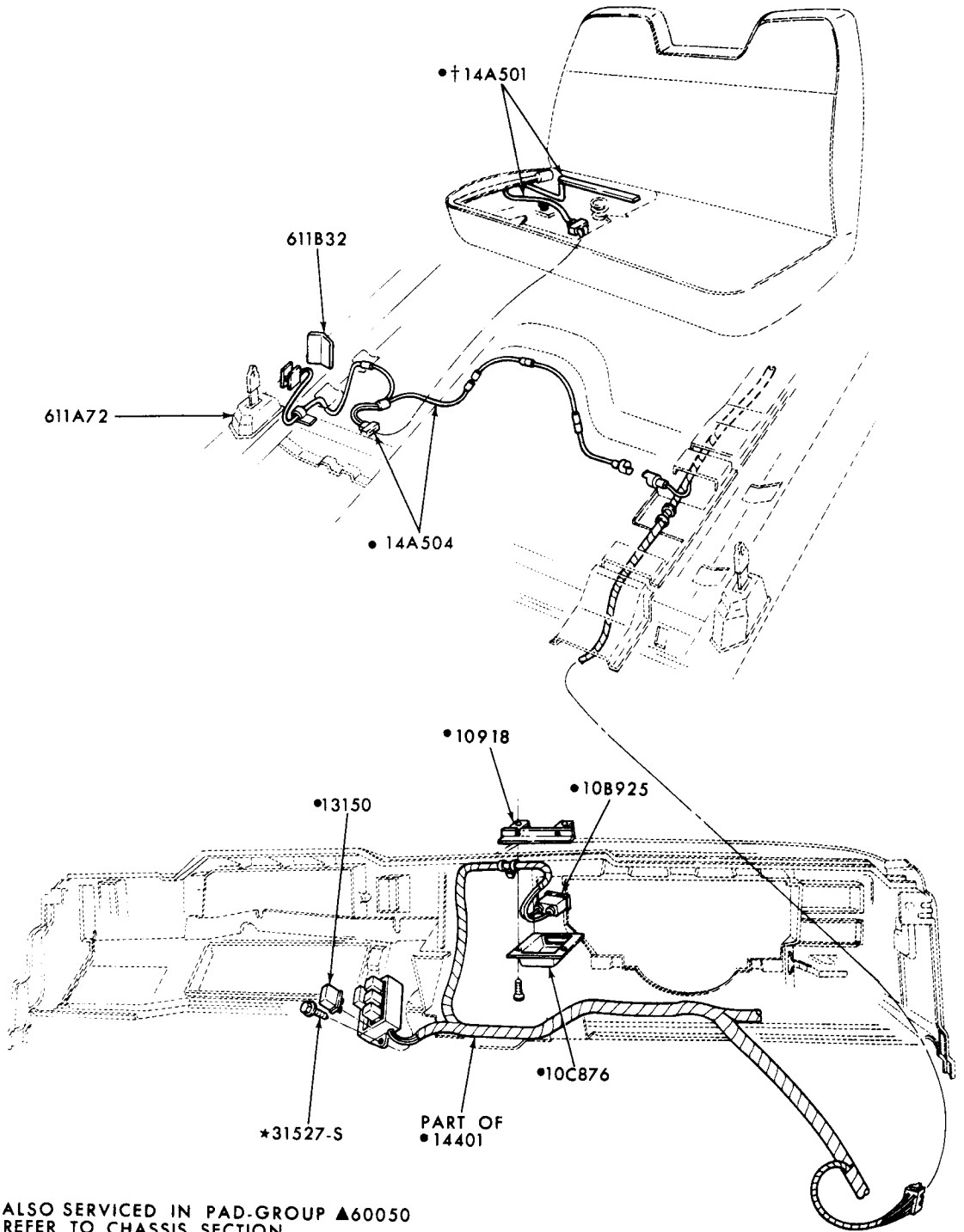

†ALSO SERVICED IN PAD-GROUP ▲60050
•REFER TO CHASSIS SECTION
▲REFER TO SOFT TRIM SECTION

P-9264

SEAT BELT WARNING SYSTEM
1972 THUNDERBIRD

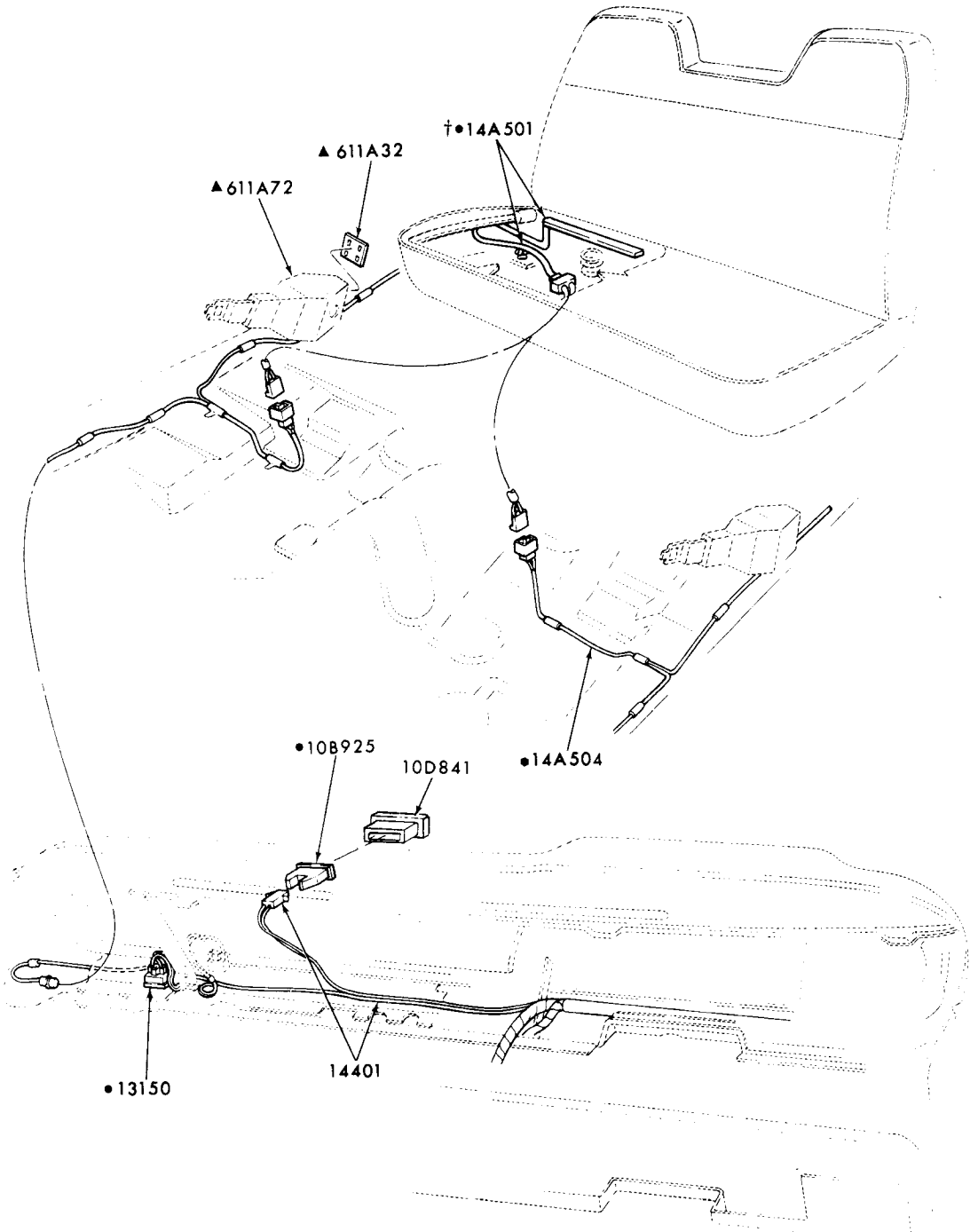

†ALSO SERVICED IN PAD-GROUP ▲60050
• REFER TO CHASSIS SECTION
▲ REFER TO SOFT TRIM SECTION

P-9261

SEAT BELT WARNING SYSTEM
1972 MAVERICK

COPYRIGHT © 1975 — FORD MOTOR COMPANY — DEARBORN, MICHIGAN

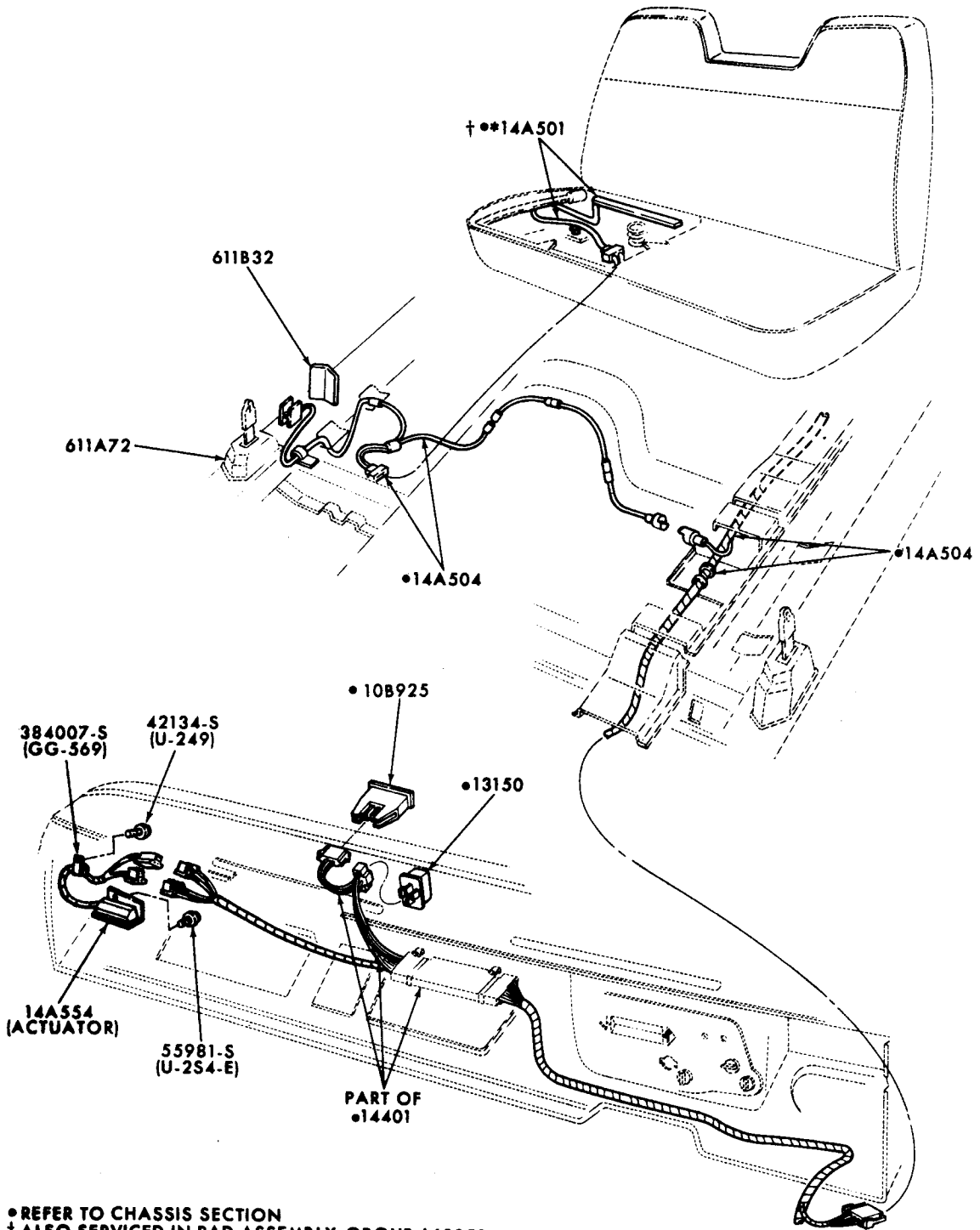

•REFER TO CHASSIS SECTION
† ALSO SERVICED IN PAD ASSEMBLY-GROUP ▲60050
▲REFER TO SOFT TRIM SECTION

P-9262

SEAT BELT WARNING SYSTEM
1972 PINTO

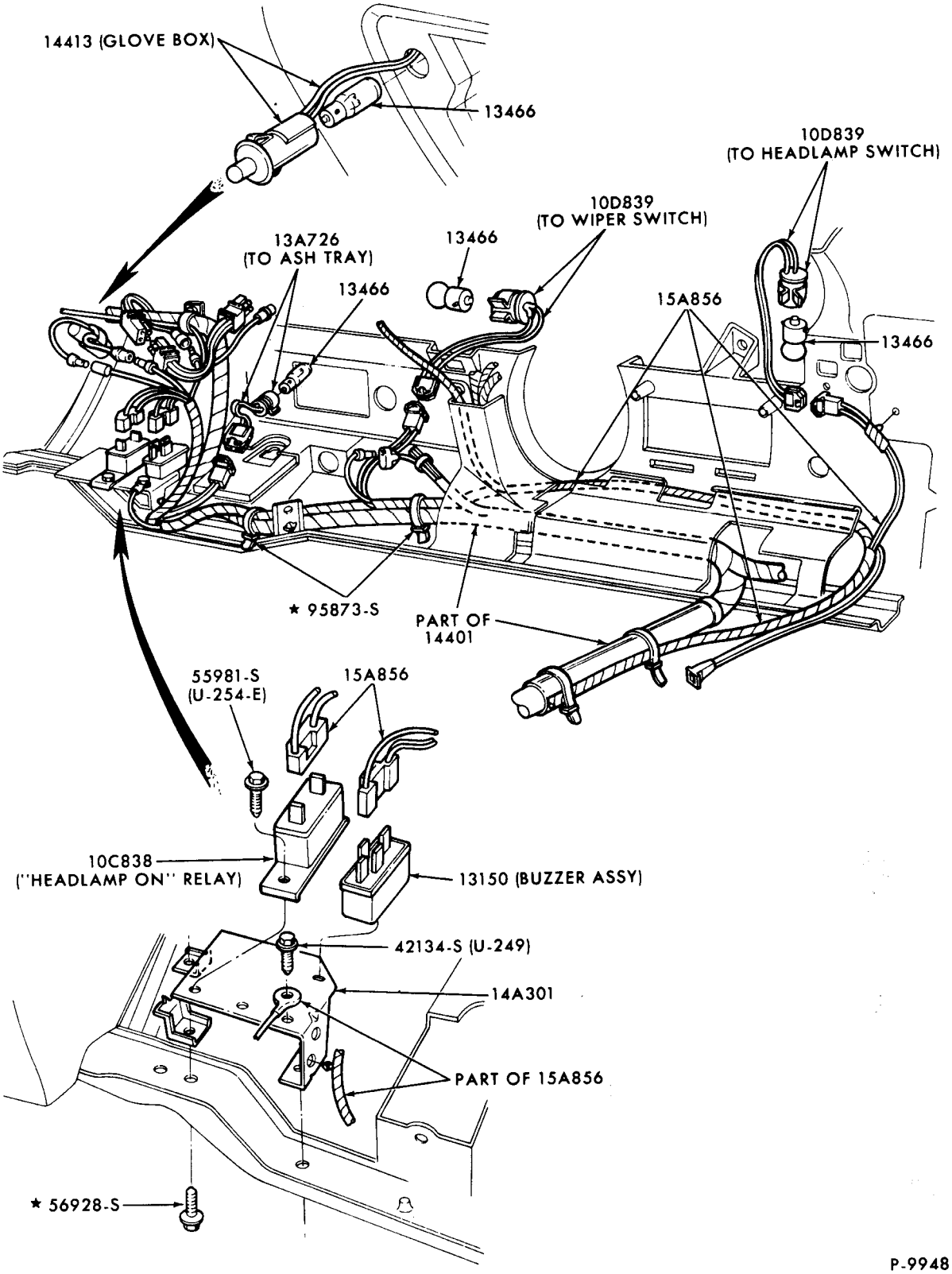

P-9948

HEADLAMP ON WARNING INDICATOR and VISIBILITY GROUP WIRING
1972 TORINO

COPYRIGHT © 1975 — FORD MOTOR COMPANY — DEARBORN, MICHIGAN

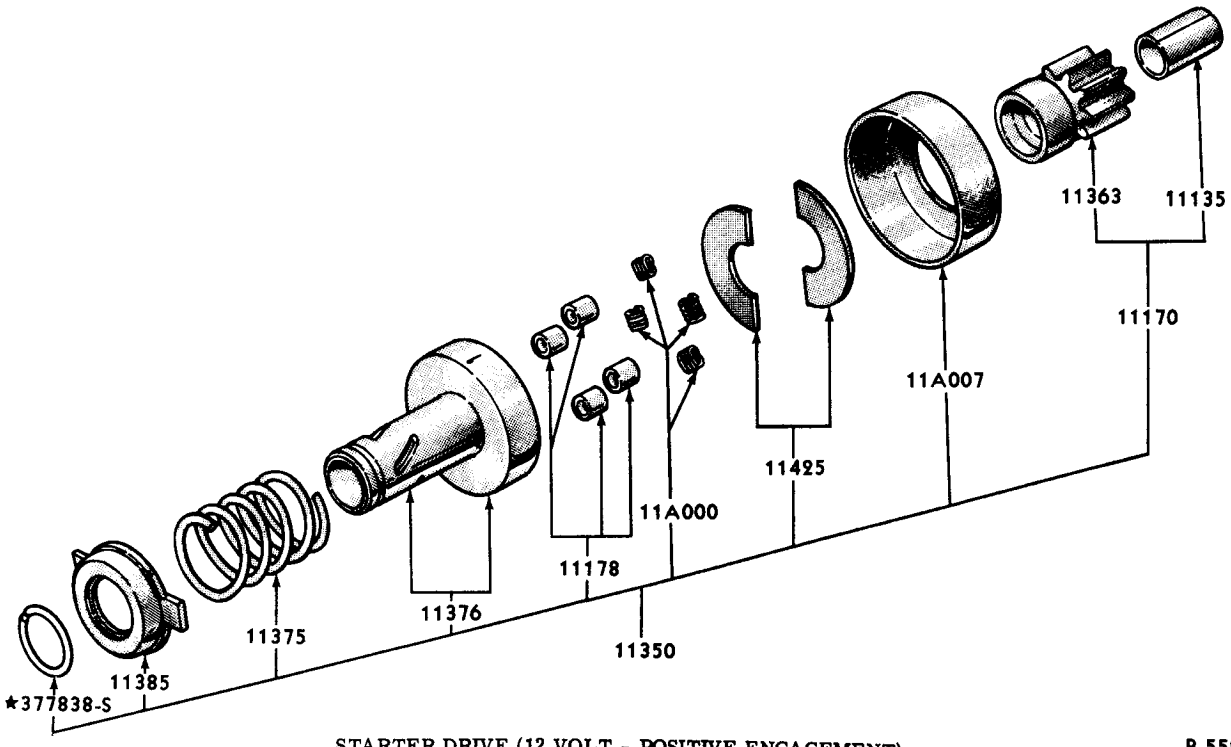

STARTER DRIVE (12 VOLT - POSITIVE ENGAGEMENT)
1965/72 FORD

P-5526

COPYRIGHT © 1975 — FORD MOTOR COMPANY — DEARBORN, MICHIGAN

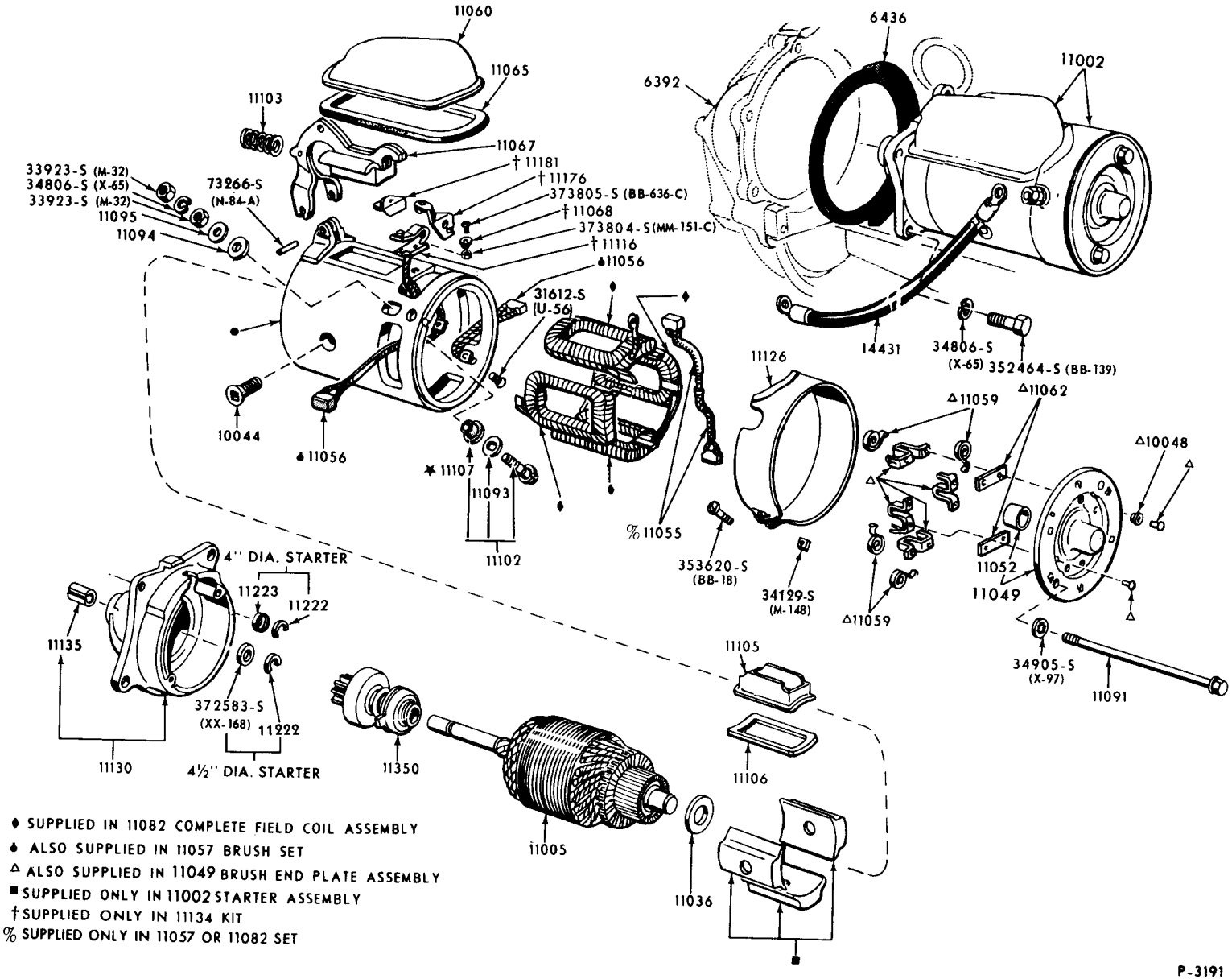

♦ SUPPLIED IN 11082 COMPLETE FIELD COIL ASSEMBLY
♦ ALSO SUPPLIED IN 11057 BRUSH SET
△ ALSO SUPPLIED IN 11049 BRUSH END PLATE ASSEMBLY
■ SUPPLIED ONLY IN 11002 STARTER ASSEMBLY
† SUPPLIED ONLY IN 11134 KIT
% SUPPLIED ONLY IN 11057 OR 11082 SET

P-3191

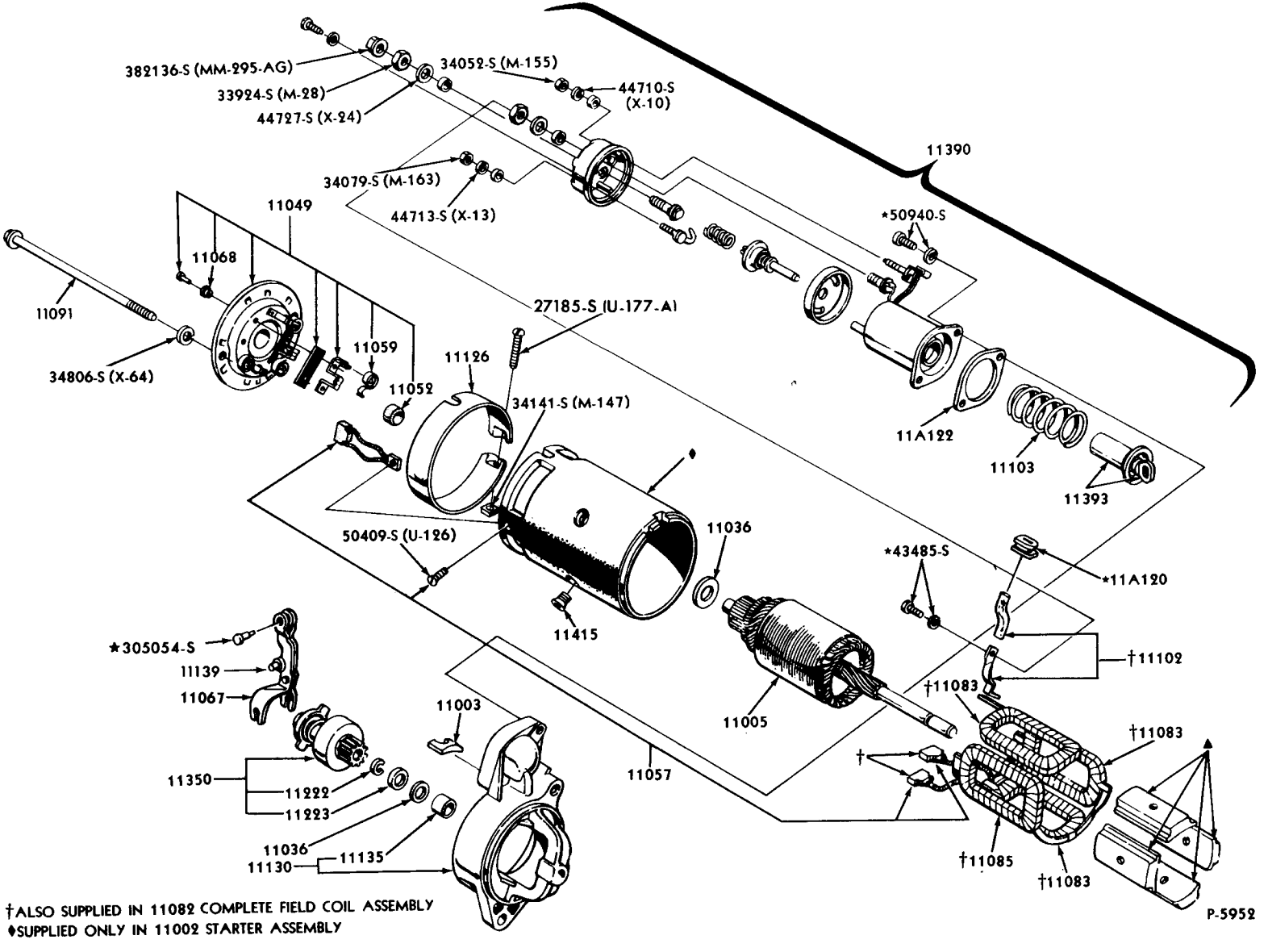

†ALSO SUPPLIED IN 11082 COMPLETE FIELD COIL ASSEMBLY
♦SUPPLIED ONLY IN 11002 STARTER ASSEMBLY

STARTER and SOLENOID (FORD 12 VOLT - POSITIVE ENGAGEMENT)
1968/72

COPYRIGHT © 1975 — FORD MOTOR COMPANY — DEARBORN, MICHIGAN

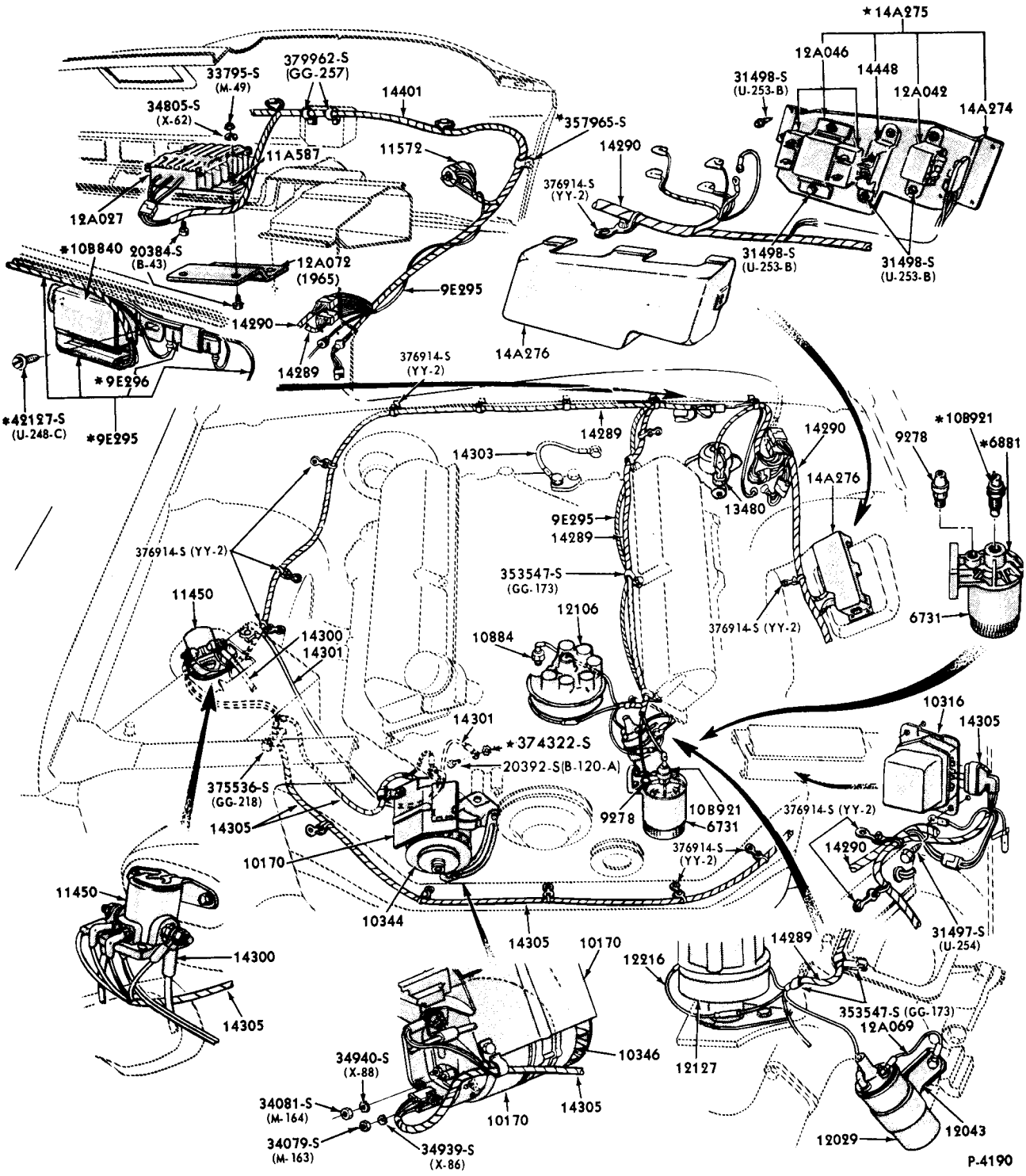

* USED WITH ENGINE OIL TEMPERATURE WARNING SYSTEM

TRANSISTORIZED IGNITION SYSTEM, OIL TEMPERATURE WARNING SYSTEM and RELATED PARTS
1965 FORD (8 CYLINDER 427 ENGINE)

COPYRIGHT © 1975 — FORD MOTOR COMPANY — DEARBORN, MICHIGAN

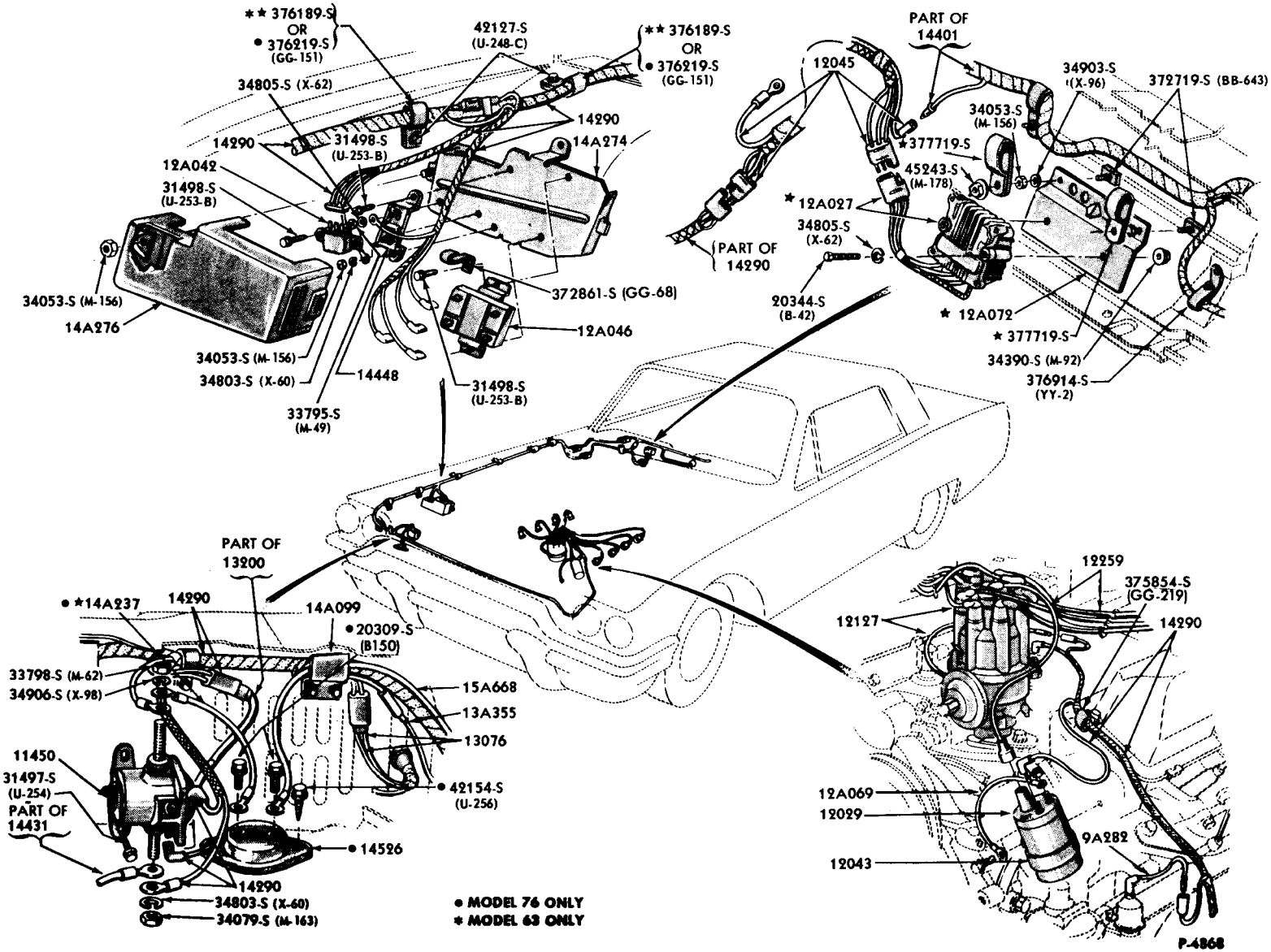

TRANSISTORIZED IGNITION SYSTEM and RELATED PARTS
1965/66 THUNDERBIRD (8 CYLINDER 390, 428 ENGINE)

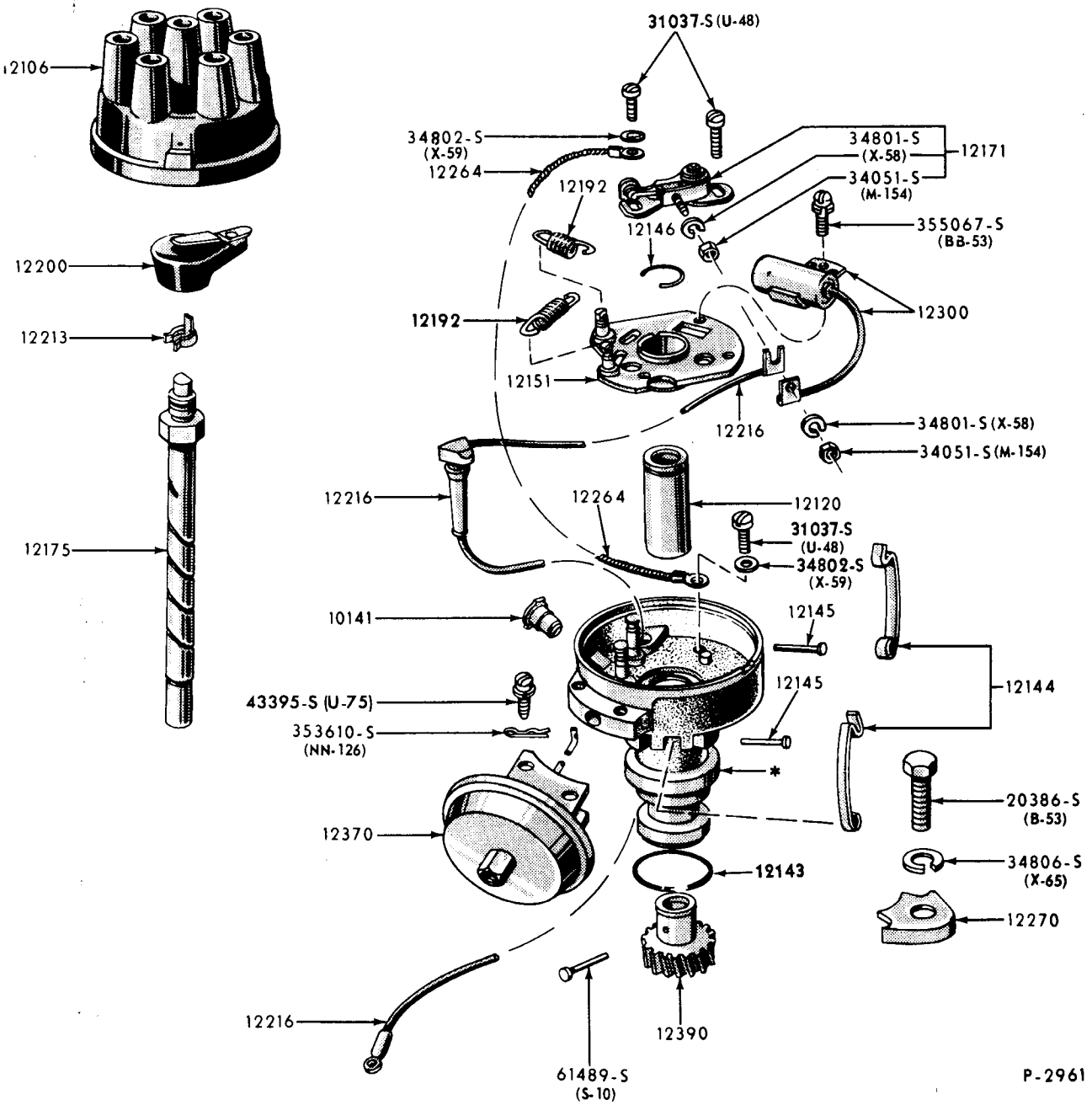

DISTRIBUTOR
1965/69 6 CYLINDER 170,200 ENGINES

COPYRIGHT © 1975 — FORD MOTOR COMPANY — DEARBORN, MICHIGAN

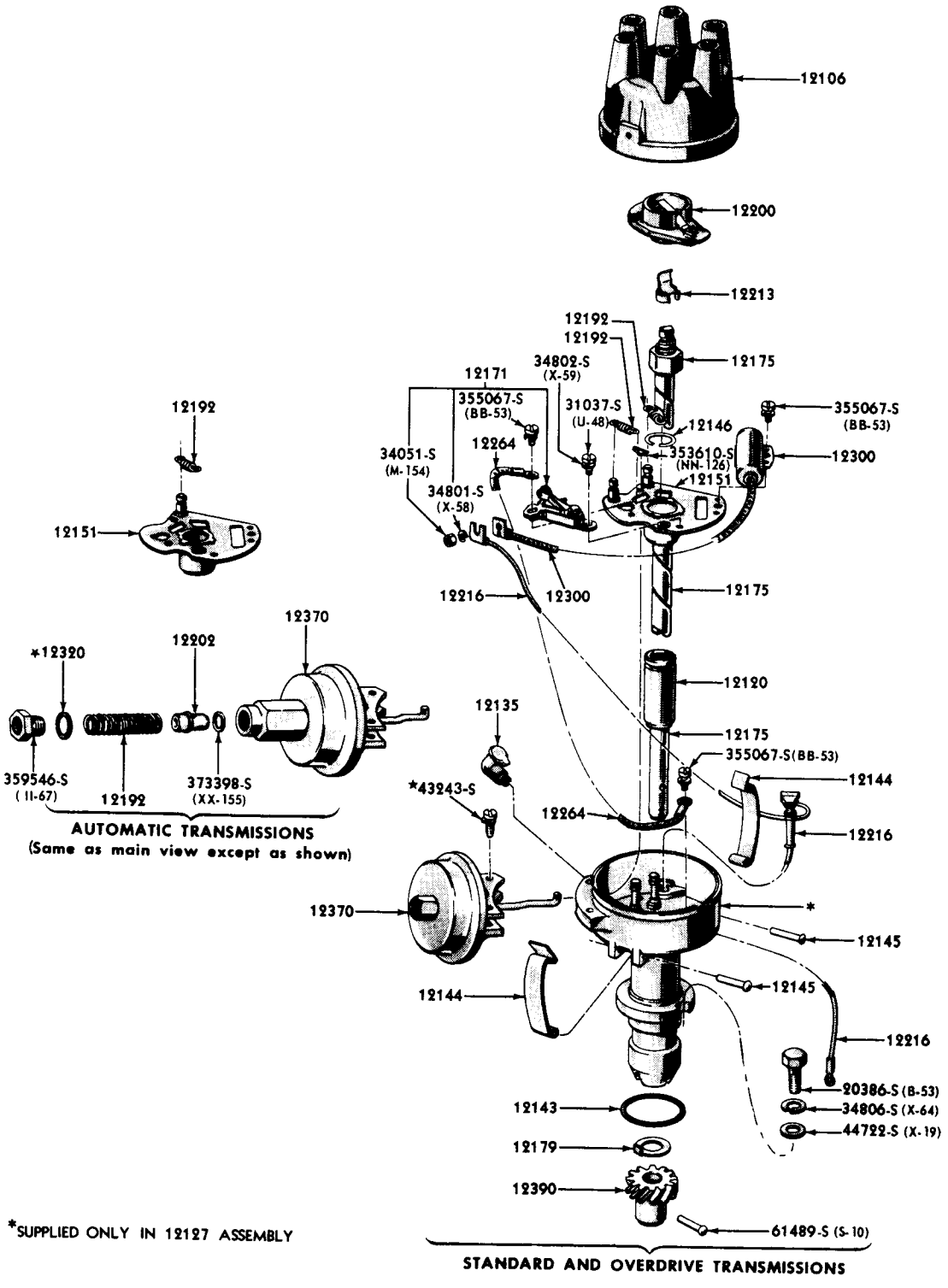

DISTRIBUTOR
1965/67 6 CYLINDER 240 ENGINE

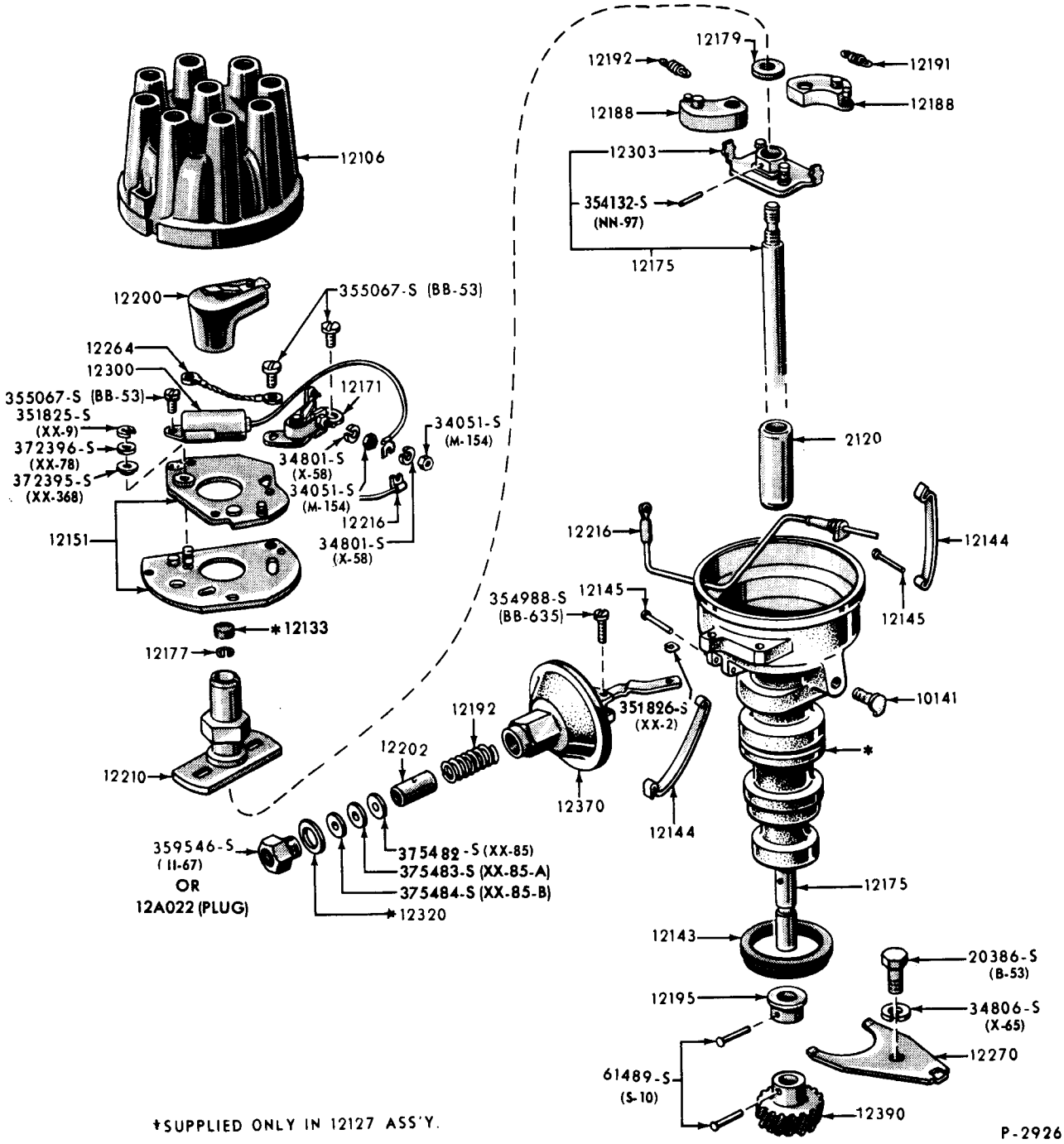

*SUPPLIED ONLY IN 12127 ASS'Y.

P-2926

DISTRIBUTOR - (PIVOT PLATE except WITH STAMPED WEIGHTS)
1965/67 8 CYLINDER - ALL

COPYRIGHT © 1975 — FORD MOTOR COMPANY — DEARBORN, MICHIGAN

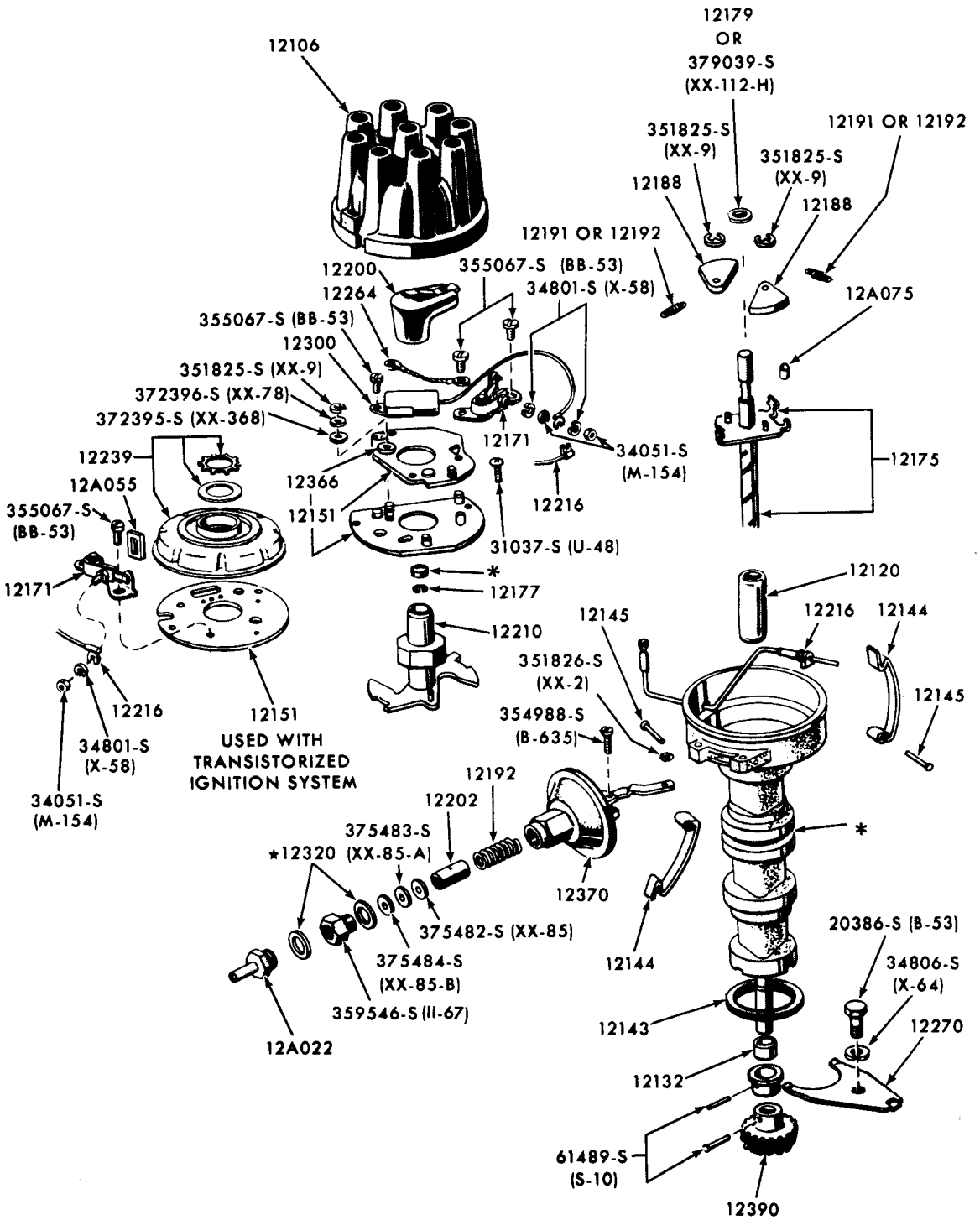

*SUPPLIED IN 12127 ASSEMBLY ONLY

P-4924

DISTRIBUTOR - (WITH STAMPED WEIGHTS)
1965/71 8 CYLINDER - ALL

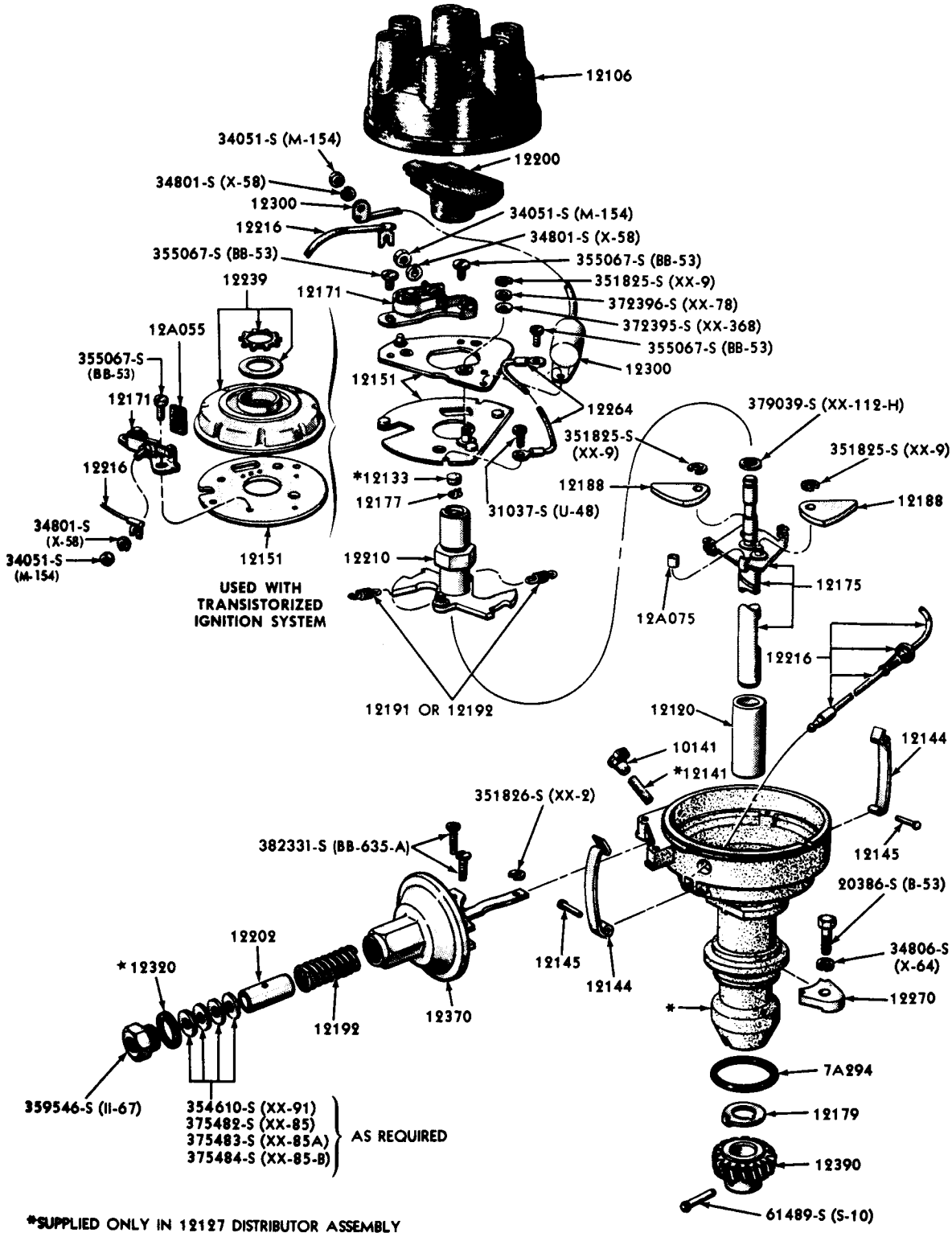

DISTRIBUTOR - DUAL ADVANCE
1969/71 6 CYLINDER 250 ENGINE

COPYRIGHT © 1975 — FORD MOTOR COMPANY — DEARBORN, MICHIGAN

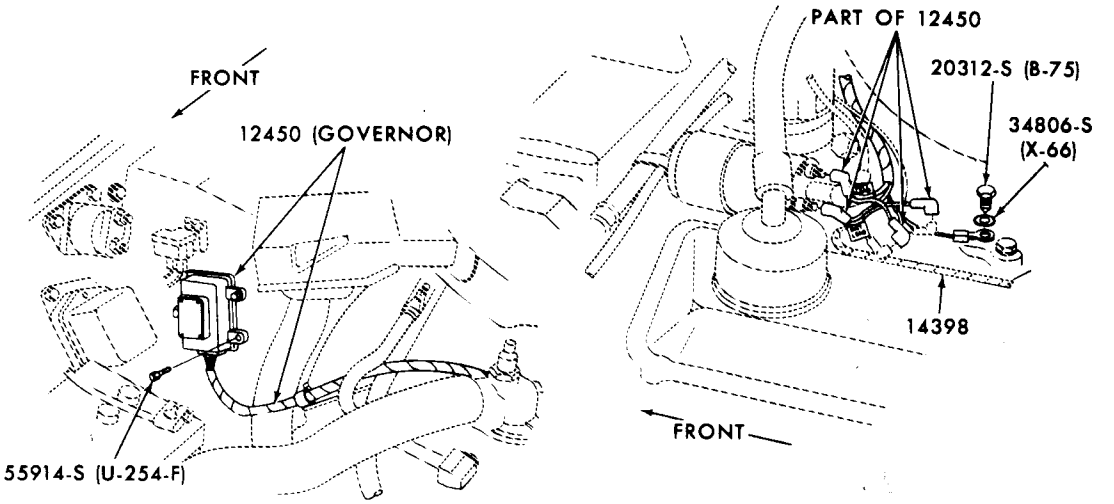

FAIRLANE/TORINO, MONTEGO 8 CYLINDER 429 COBRA JET & SUPER COBRA JET ENGINES

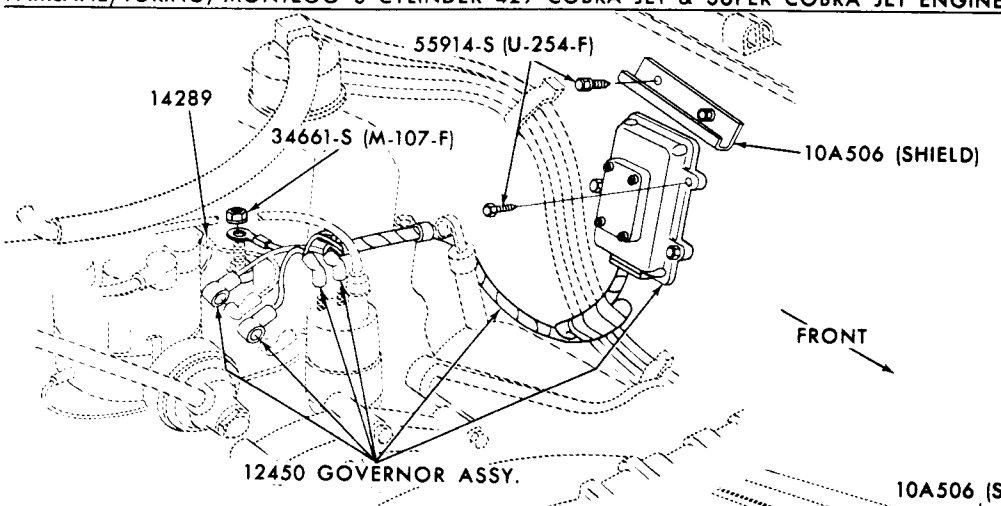

MUSTANG, COUGAR 8 CYLINDER 302-4V HIGH OUTPUT ENGINE

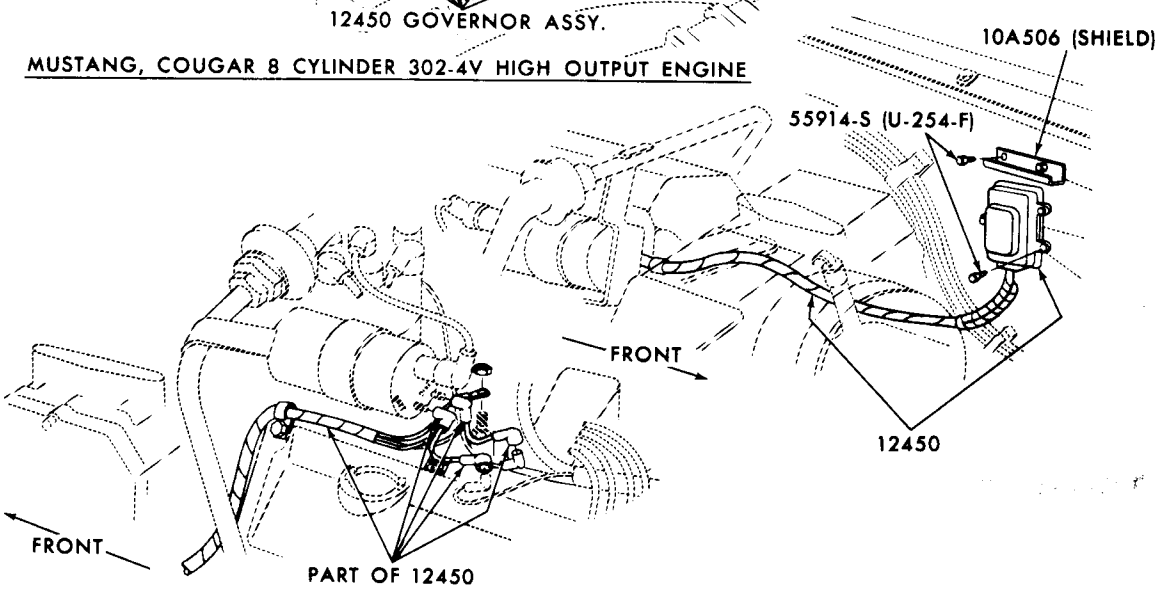

MUSTANG, COUGAR 8 CYLINDER 428 COBRA JET & SUPER COBRA JET ENGINES P-7589

ENGINE GOVERNOR - TRANSISTORIZED-302, 428, 429 CJ-S/CJ ENGINES
1969/71 FAIRLANE/TORINO, 1969/72 MUSTANG

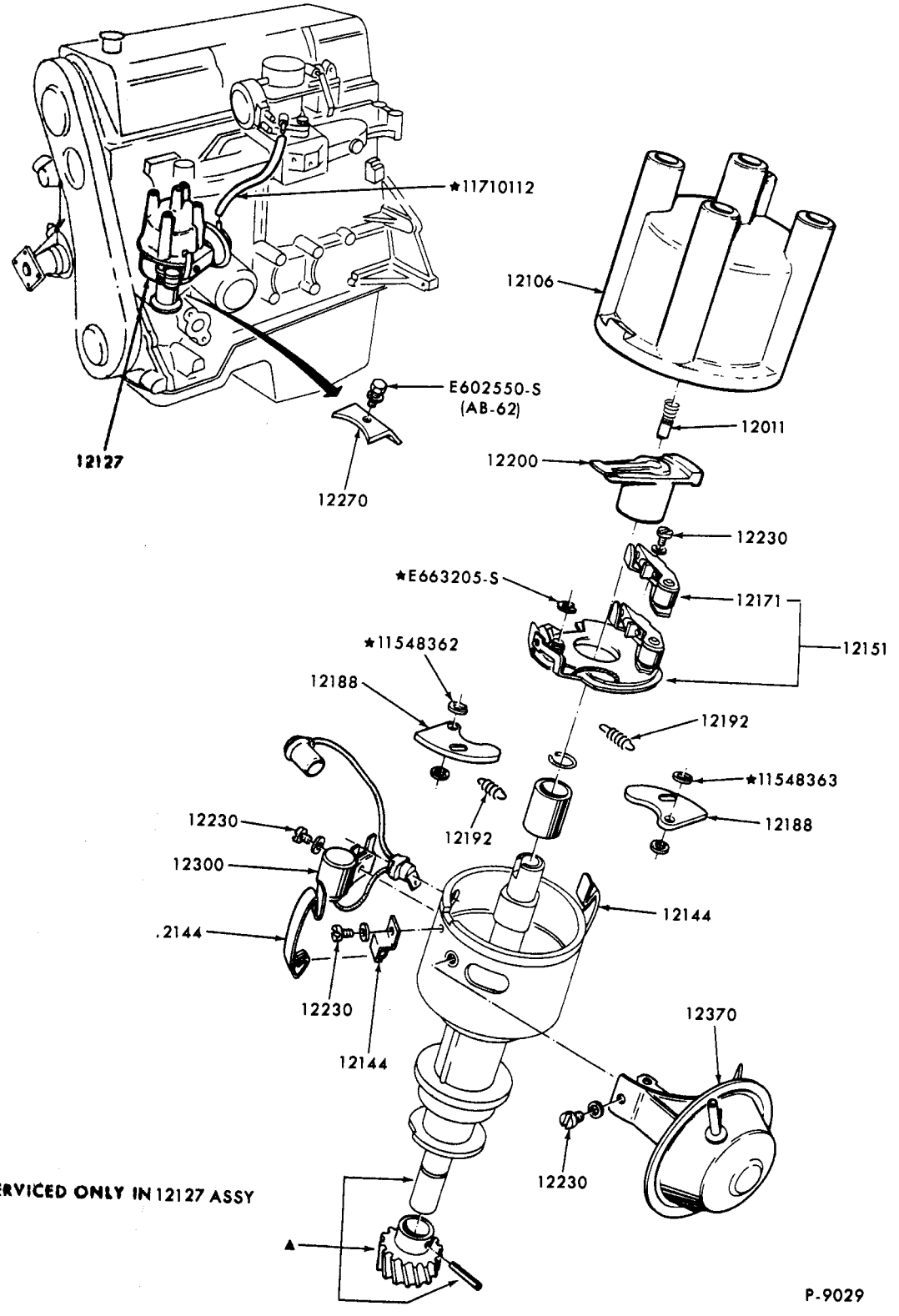

DISTRIBUTOR
1971/72 PINTO (4 CYLINDER 122 O.H.C. ENGINE)

COPYRIGHT © 1975 — FORD MOTOR COMPANY — DEARBORN, MICHIGAN

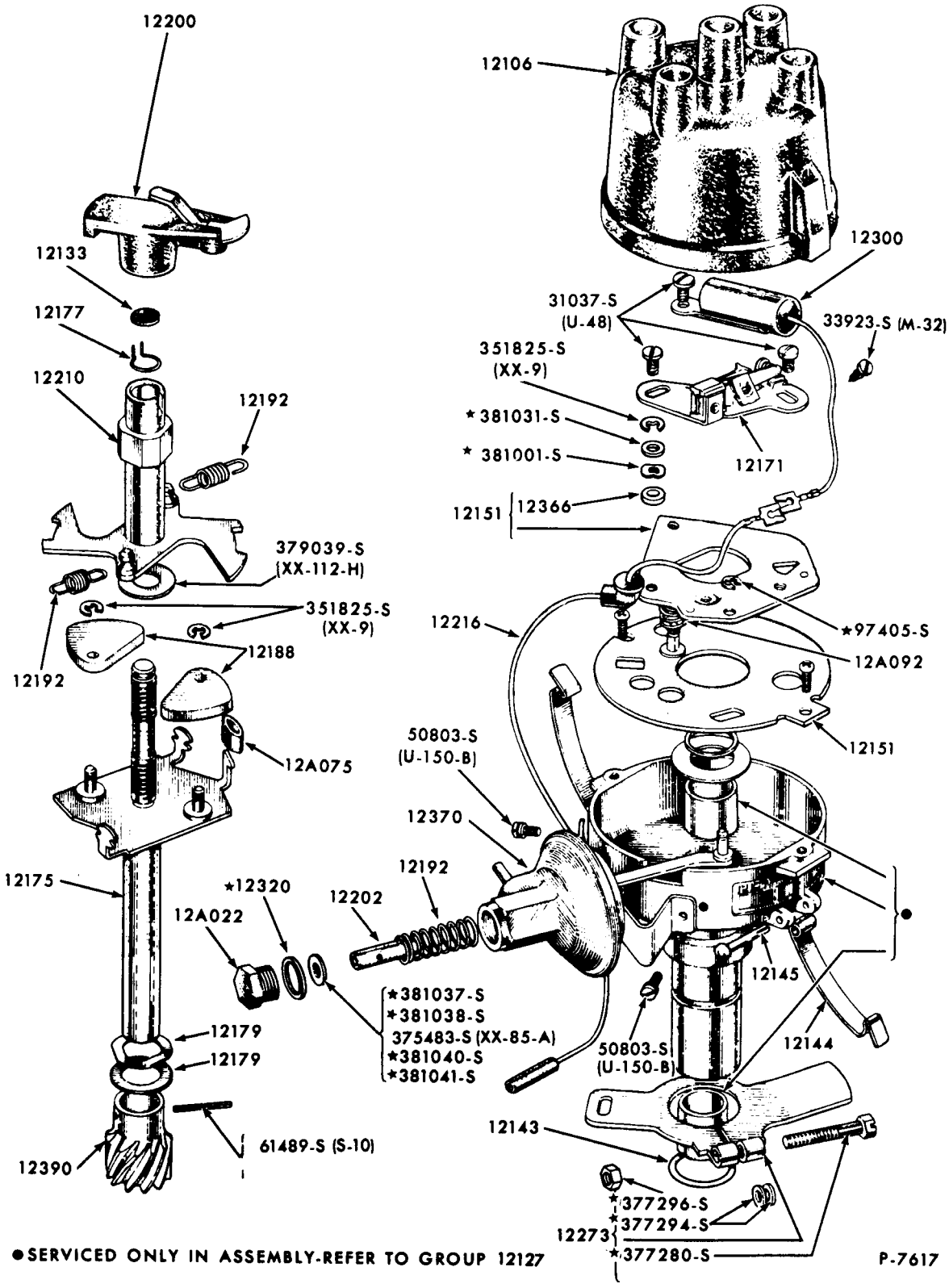

DISTRIBUTOR
1971/72 PINTO (4 CYLINDER 98 ENGINE)

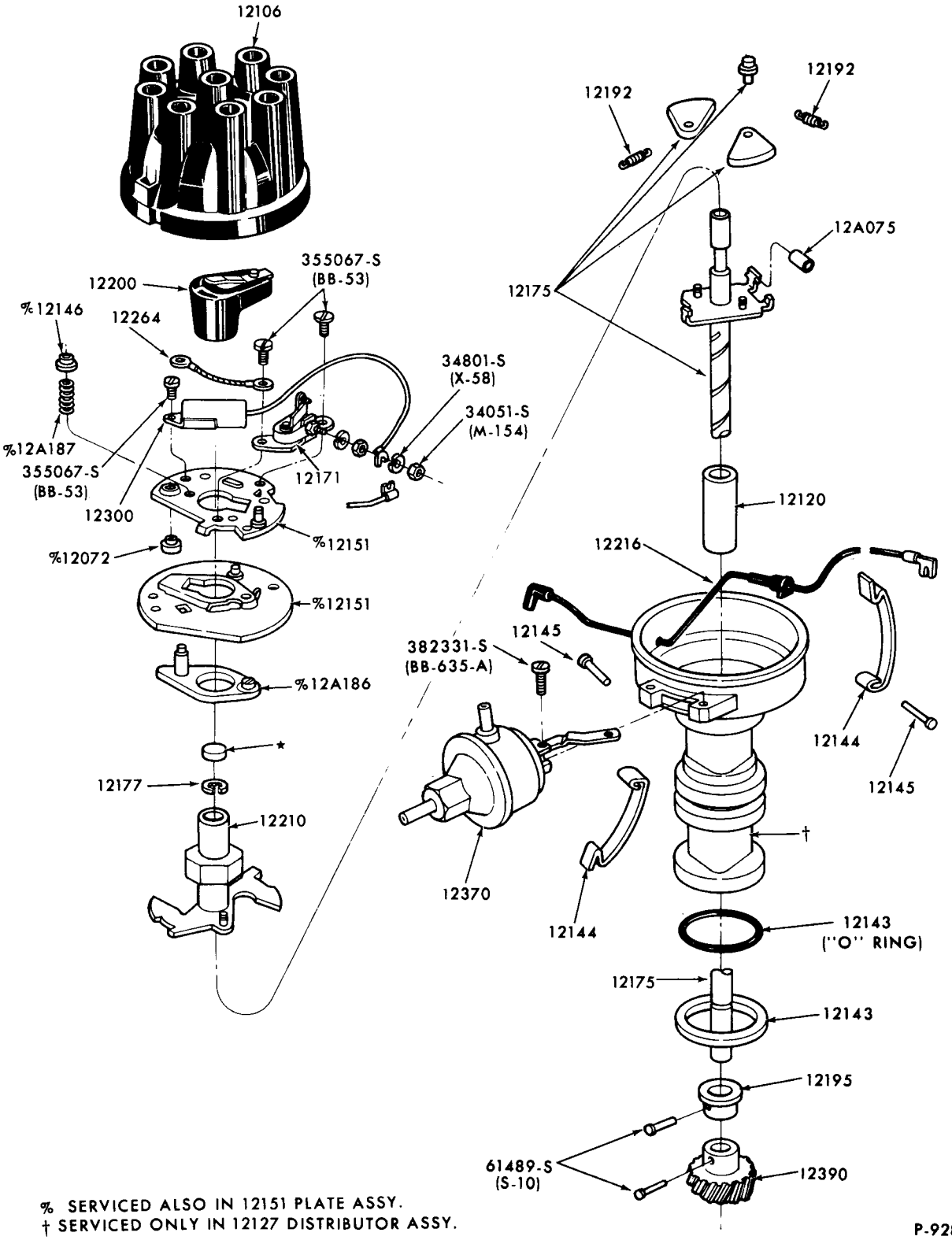

% SERVICED ALSO IN 12151 PLATE ASSY.
† SERVICED ONLY IN 12127 DISTRIBUTOR ASSY.

P-9288

DISTRIBUTOR - SINGLE POINT
1972 8 CYLINDER - ALL

COPYRIGHT © 1975 — FORD MOTOR COMPANY — DEARBORN, MICHIGAN

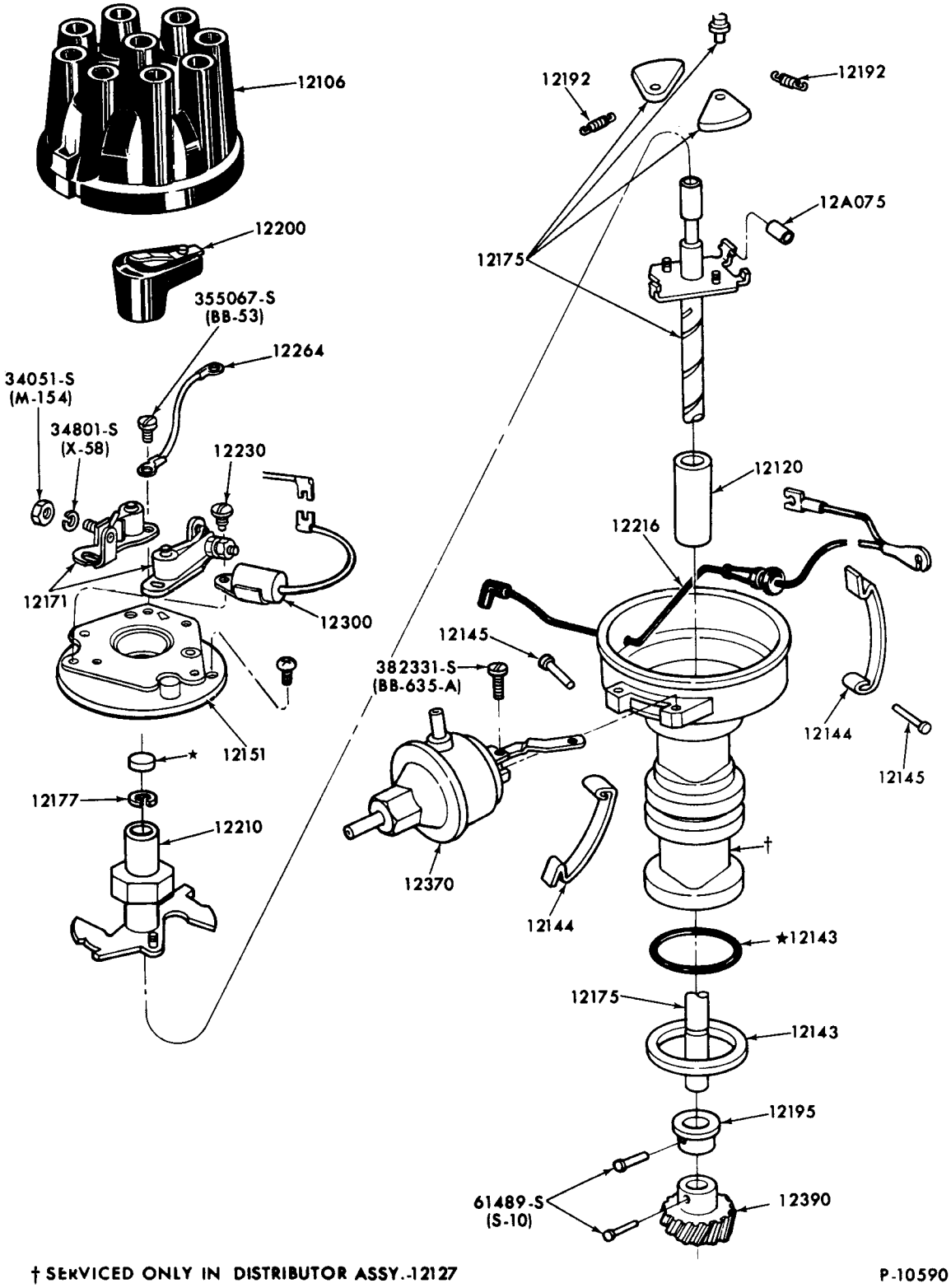

† SERVICED ONLY IN DISTRIBUTOR ASSY.-12127

P-10590

DISTRIBUTOR - DUAL POINT
1972 8 CYLINDER

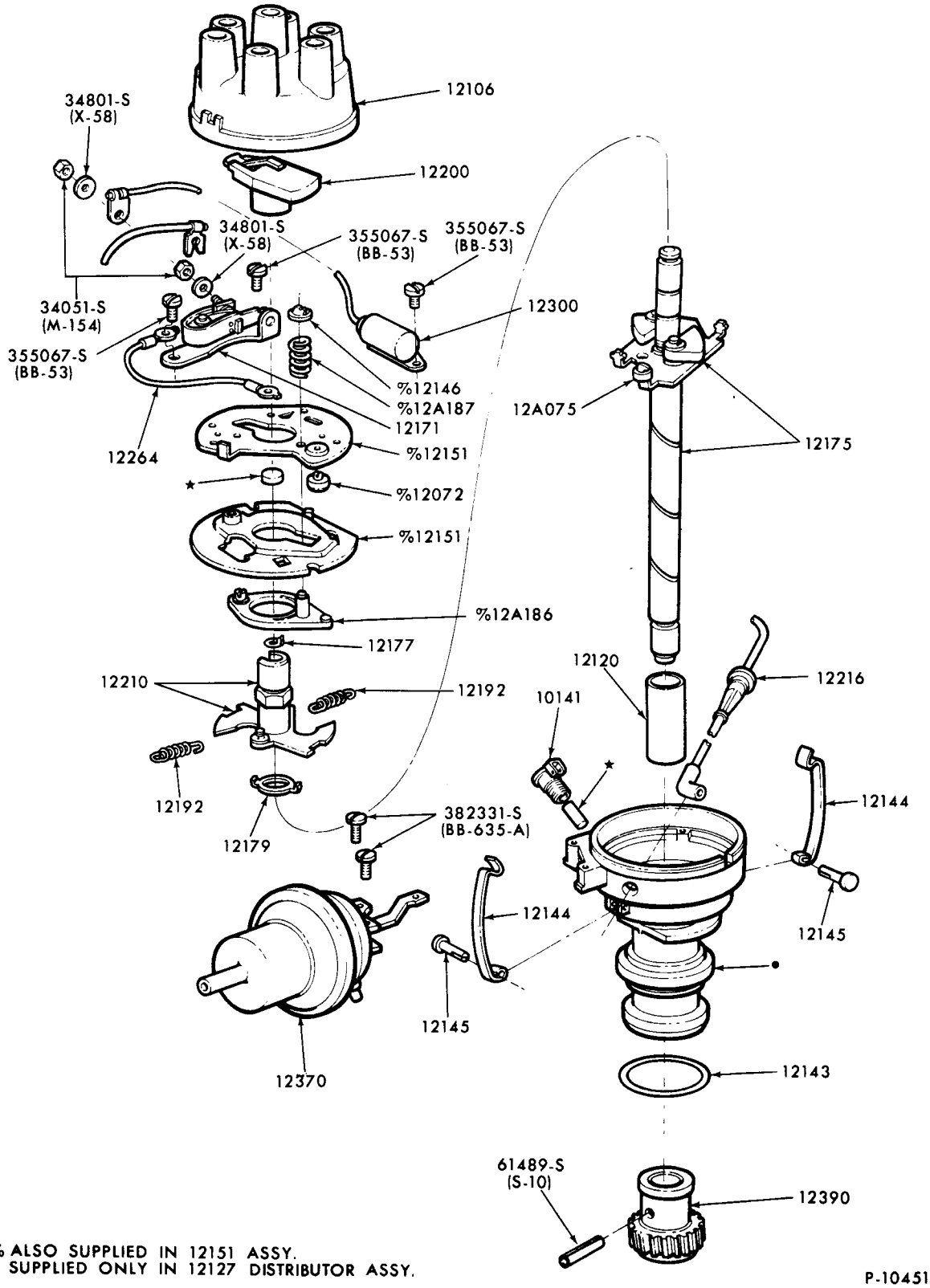

% ALSO SUPPLIED IN 12151 ASSY.
• SUPPLIED ONLY IN 12127 DISTRIBUTOR ASSY.

P-10451

DISTRIBUTOR - TYPICAL
1972 6 CYLINDER - ALL

COPYRIGHT © 1975 — FORD MOTOR COMPANY — DEARBORN, MICHIGAN

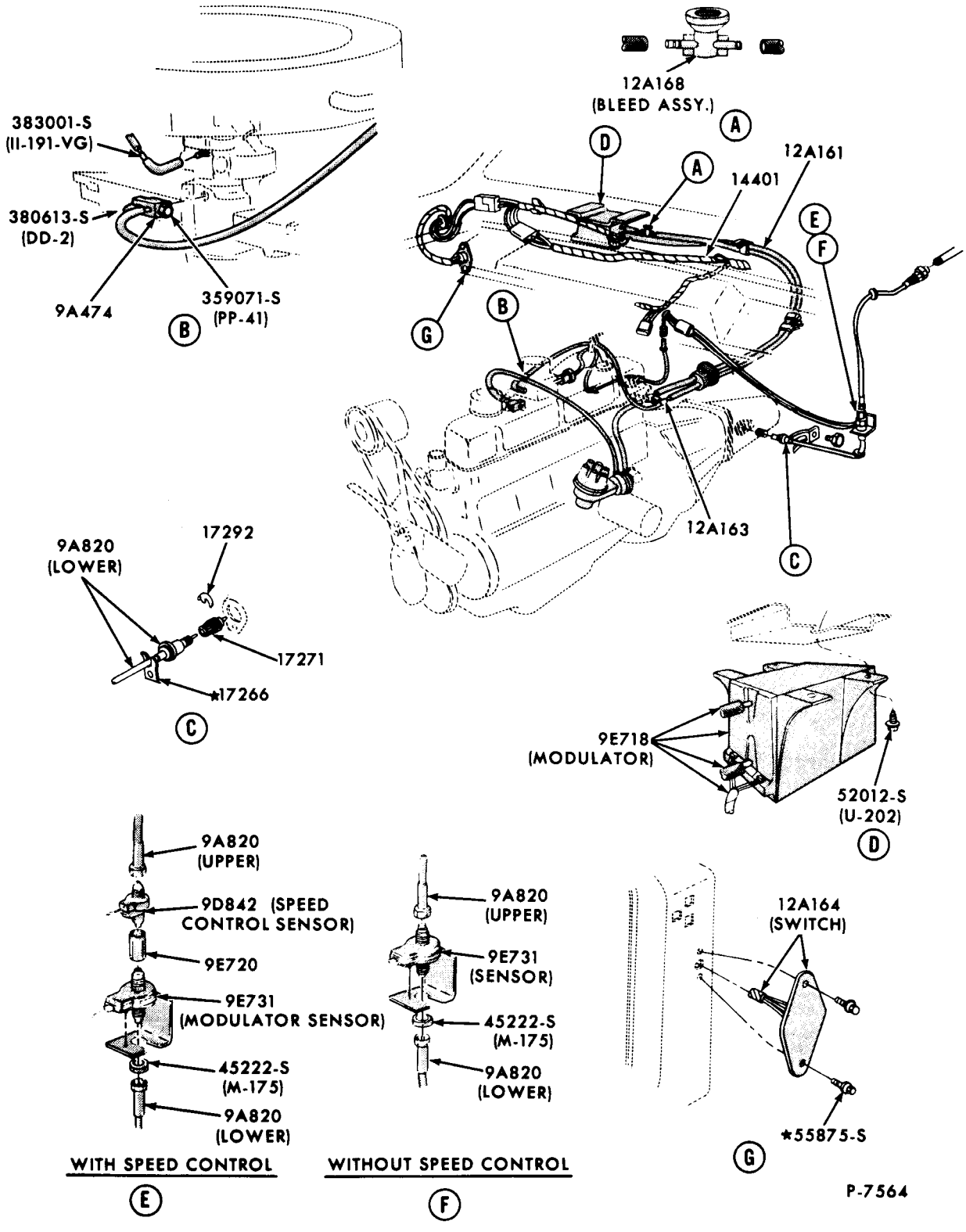

DISTRIBUTOR MODULATOR-6 CYL. 240 C.I.D. ENGINE
1970 FORD

COPYRIGHT © 1975 — FORD MOTOR COMPANY — DEARBORN, MICHIGAN

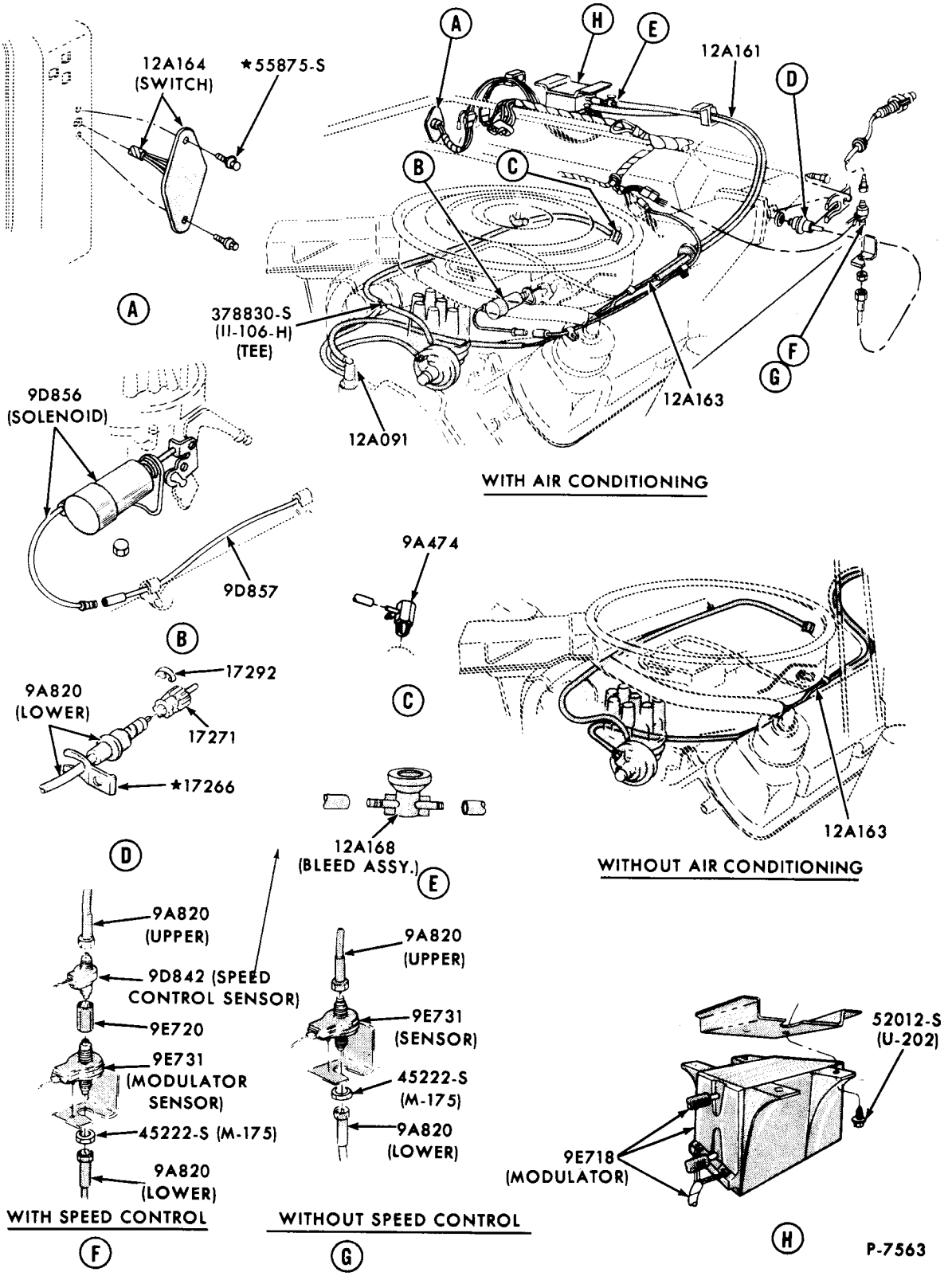

DISTRIBUTOR MODULATOR - 8 CYL. 302 C.I.D. ENGINE
1970 FORD

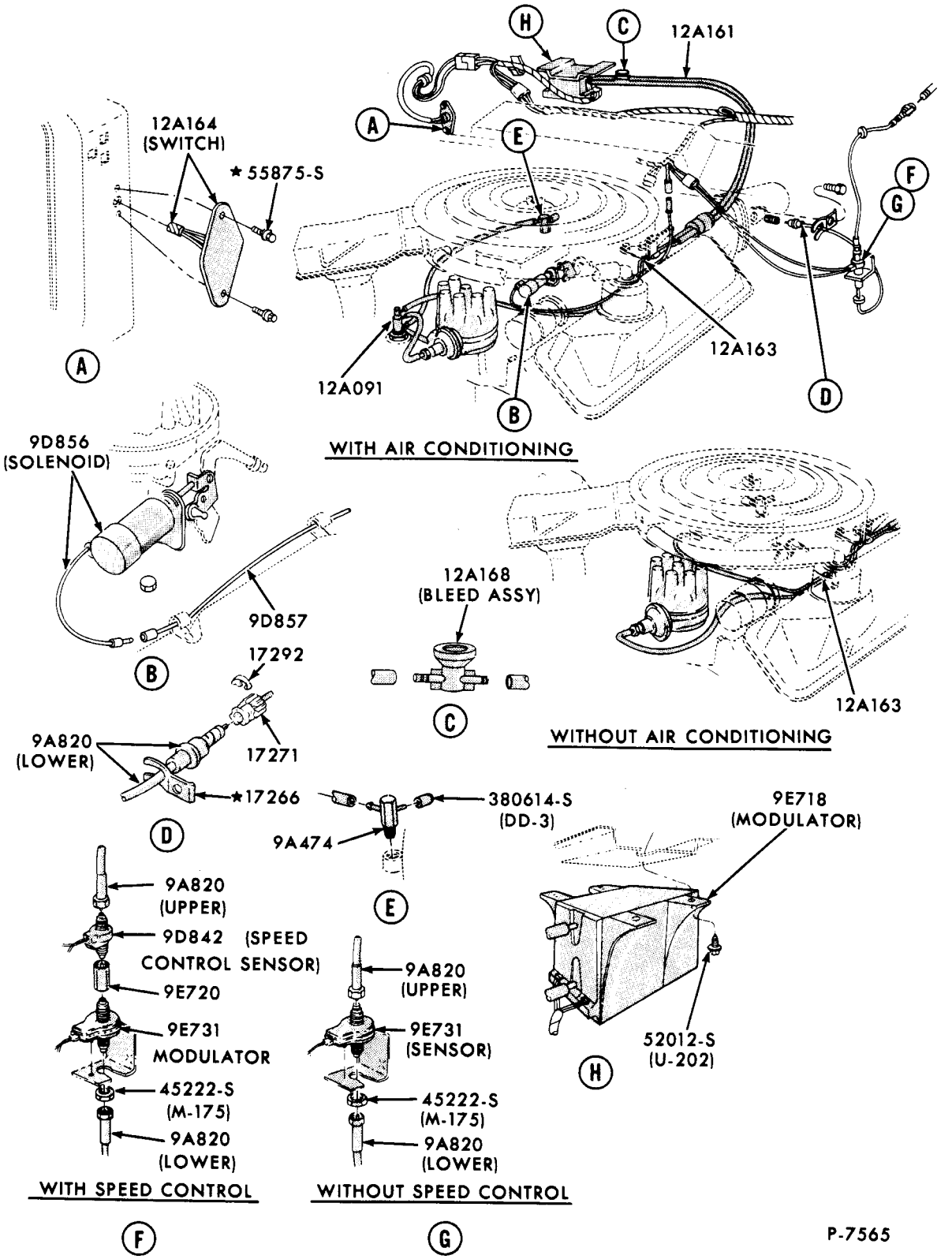

DISTRIBUTOR MODULATOR - 8 CYL. 390 C.I.D. ENGINE
1970 FORD

COPYRIGHT © 1975 — FORD MOTOR COMPANY — DEARBORN, MICHIGAN

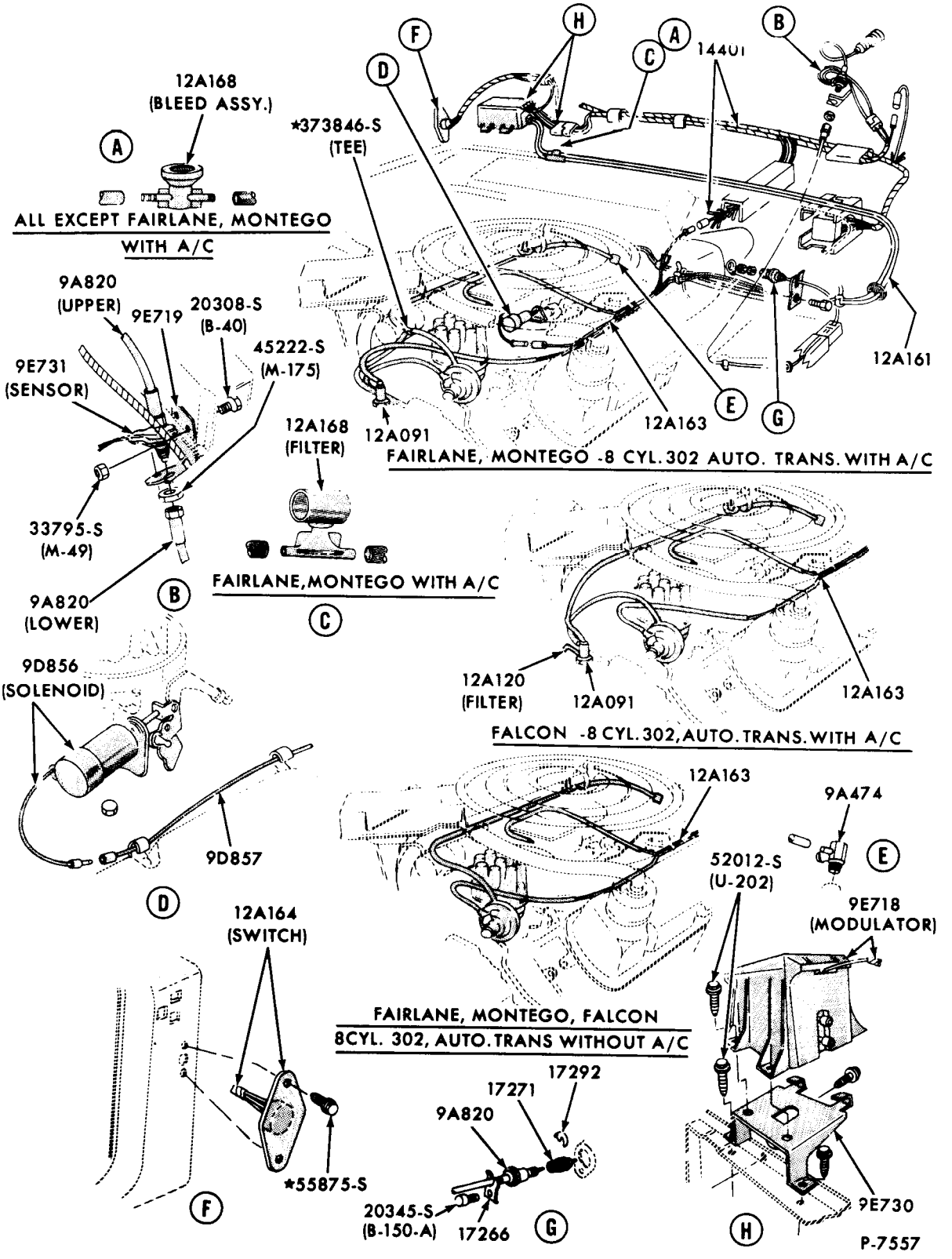

DISTRIBUTOR MODULATOR - 8 CYL. 302 C.I.D. ENGINE
1970 FAIRLANE/TORINO 1970 FALCON

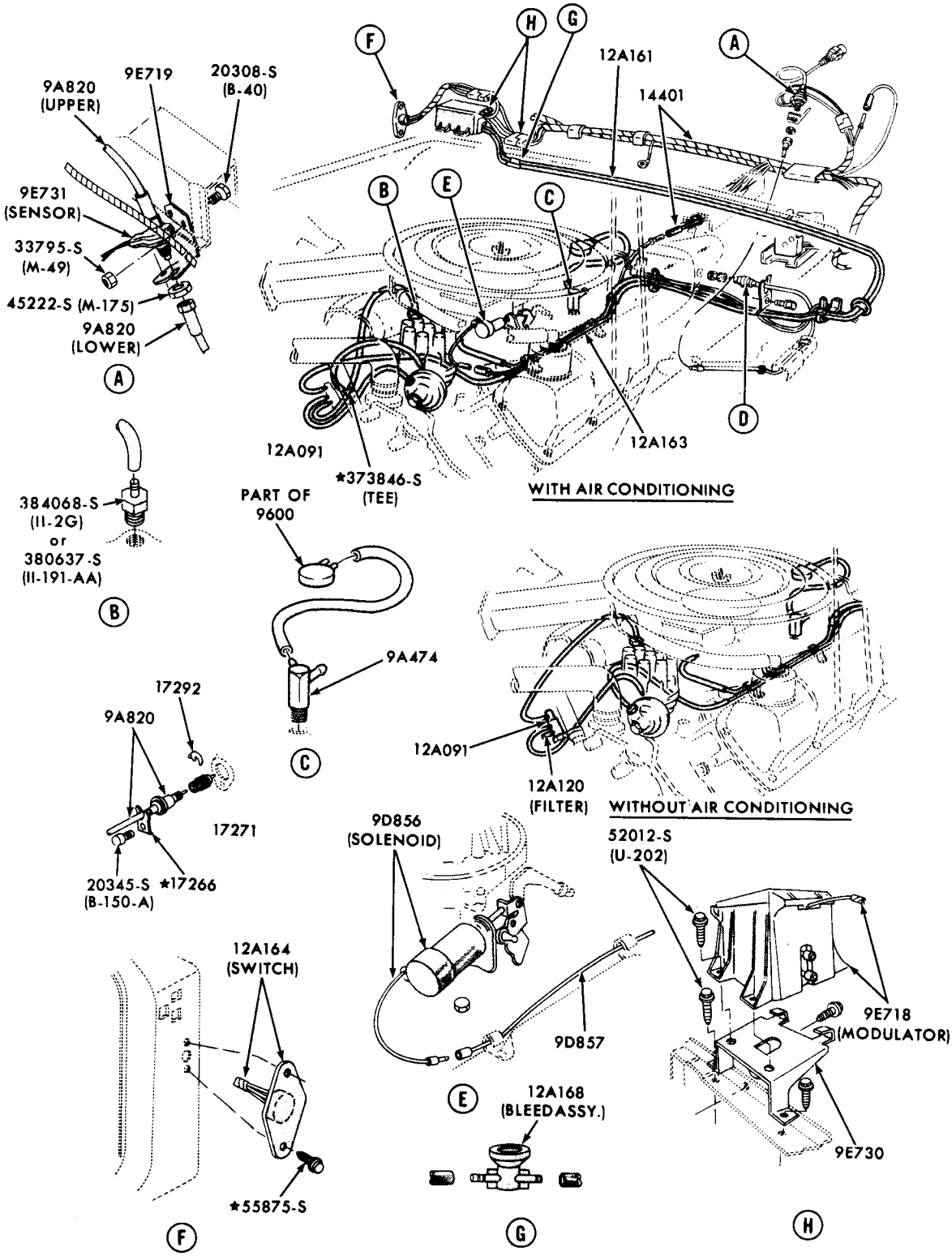

P-7559

DISTRIBUTOR MODULATOR - 8 CYL. 351-4V C.I.D. ENGINE WITHOUT RAM AIR
1970 FAIRLANE/TORINO

COPYRIGHT © 1975 — FORD MOTOR COMPANY — DEARBORN, MICHIGAN

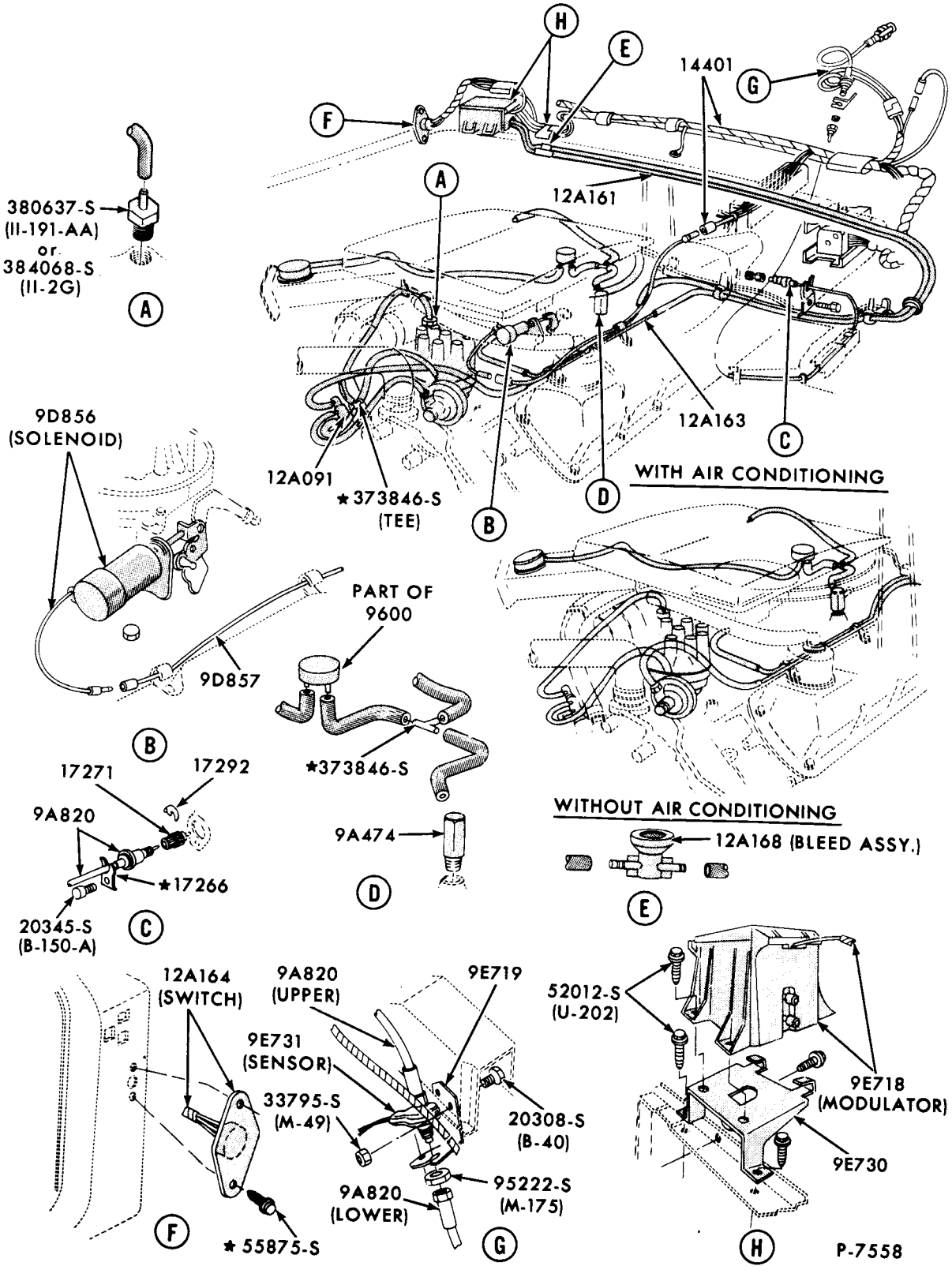

DISTRIBUTOR MODULATOR - 8 CYL. 351-4V C.I.D. ENGINE WITH RAM AIR
1970 FAIRLANE/TORINO

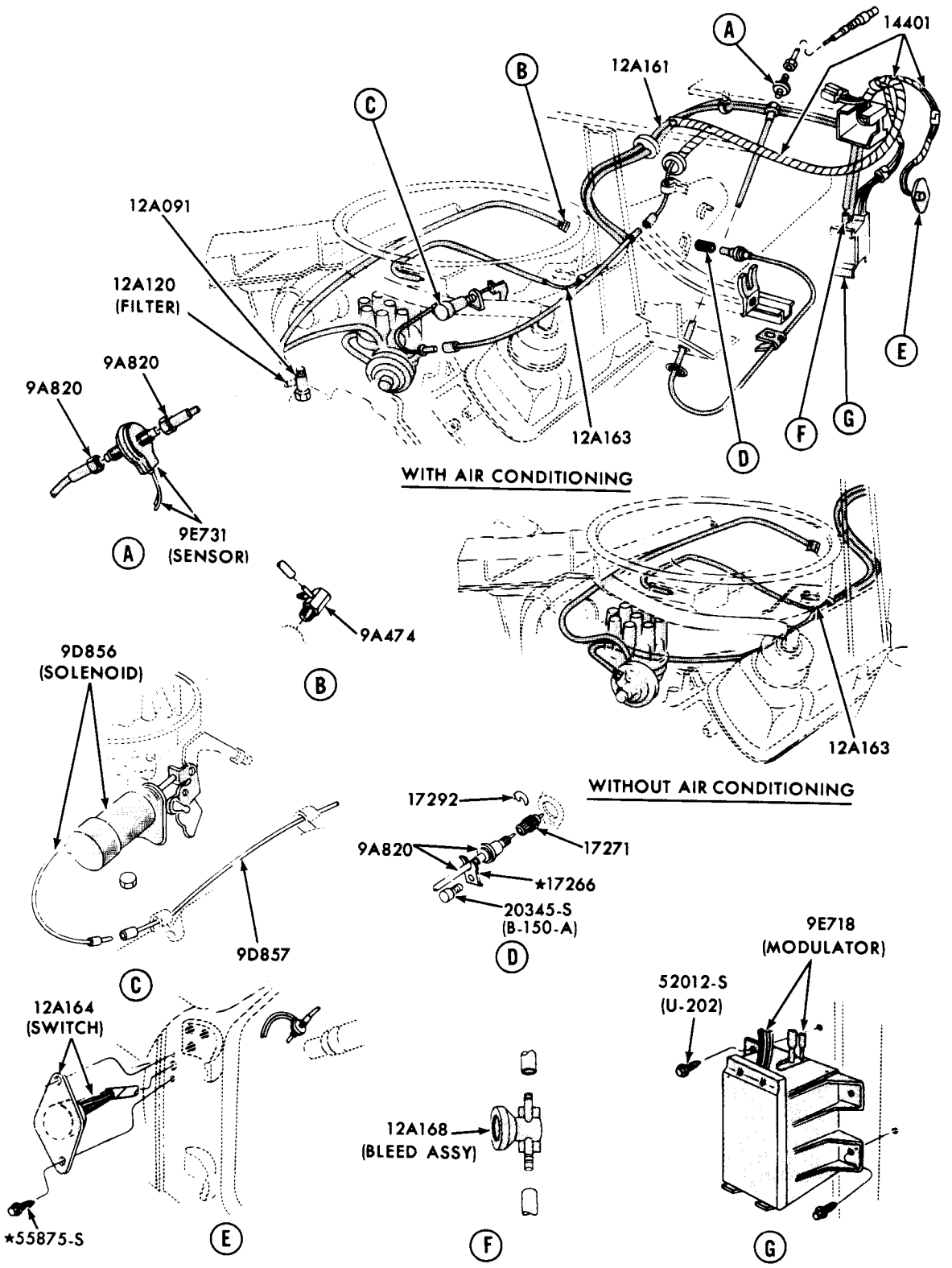

P-7560

DISTRIBUTOR MODULATOR - 8 CYL. 302 C.I.D. ENGINE
1970 MUSTANG

COPYRIGHT © 1975 — FORD MOTOR COMPANY — DEARBORN, MICHIGAN

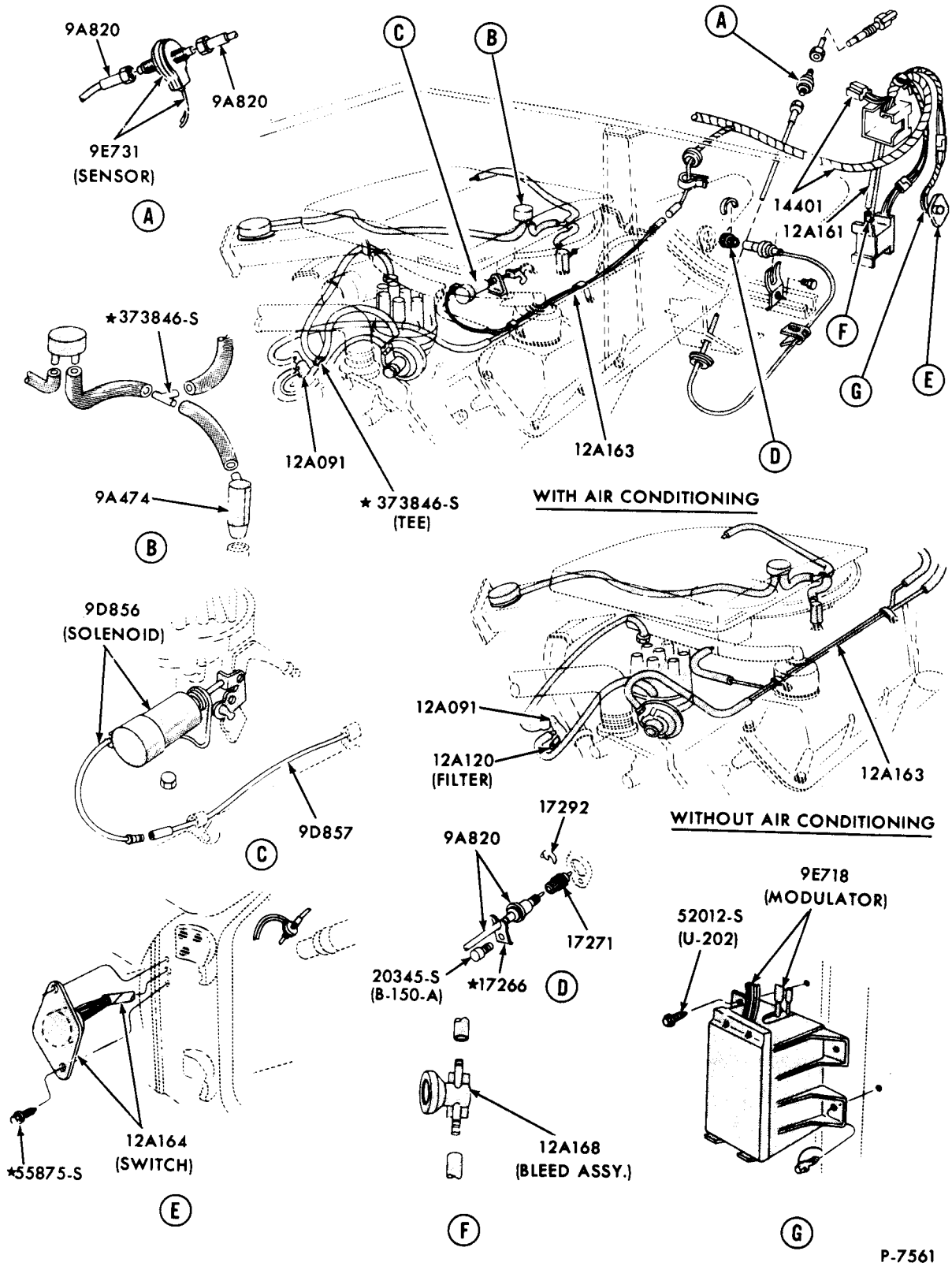

DISTRIBUTOR MODULATOR - 8 CYL. 351-4V C.I.D. ENGINE WITH RAM AIR
1970 MUSTANG

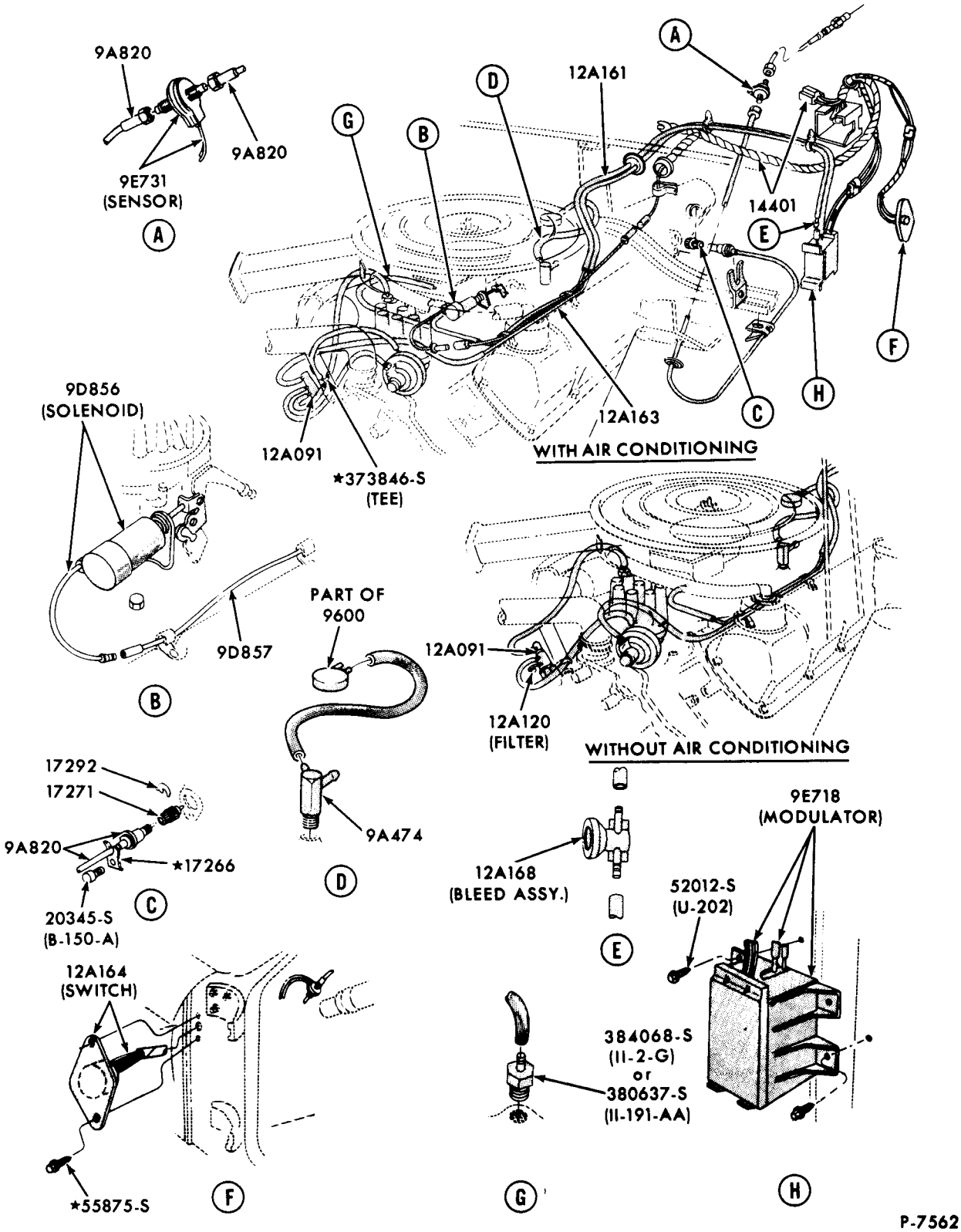

DISTRIBUTOR MODULATOR - 8 CYL. 351-4V ENGINE WITHOUT RAM AIR
1970 MUSTANG

COPYRIGHT © 1975 — FORD MOTOR COMPANY — DEARBORN, MICHIGAN

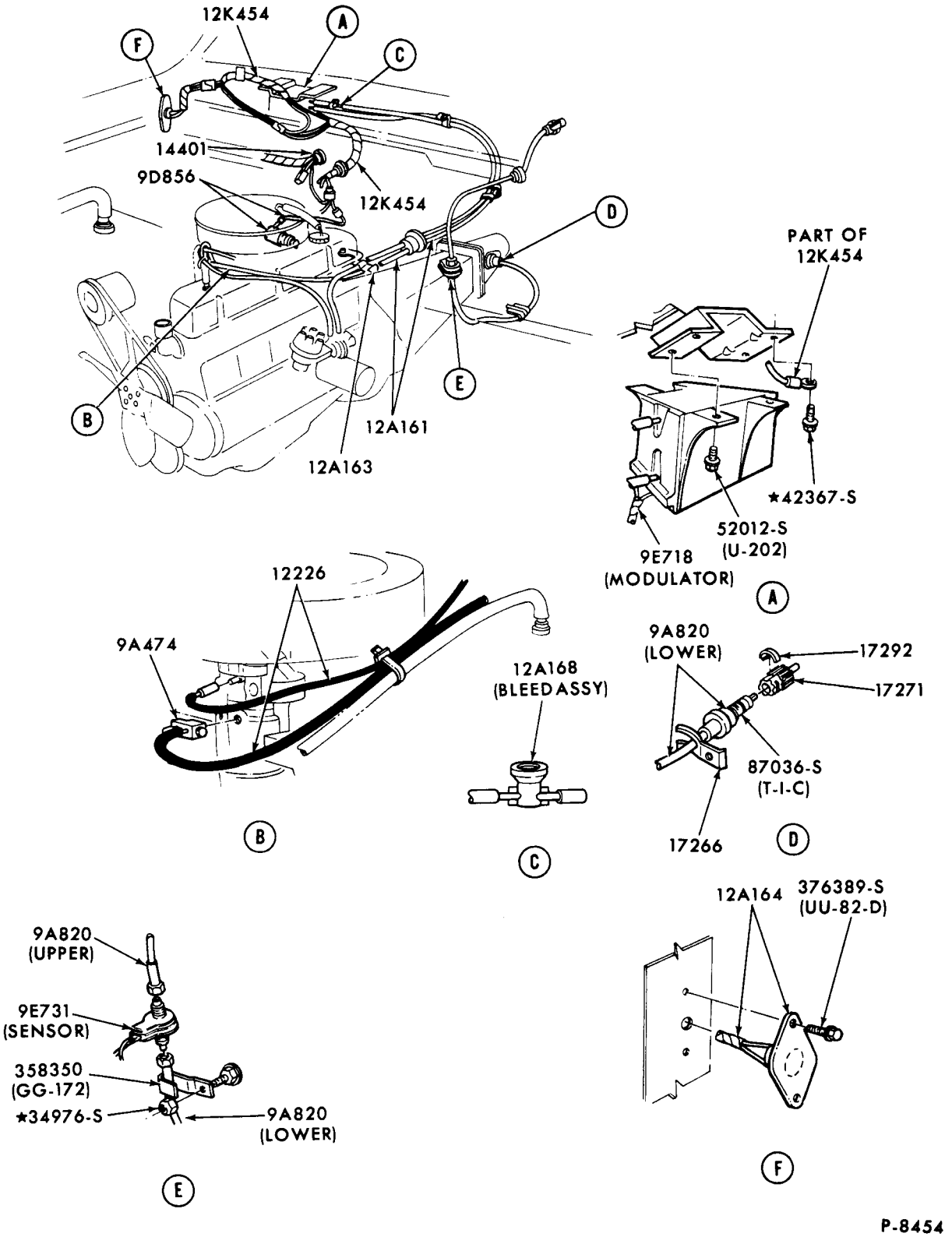

DISTRIBUTOR MODULATOR-6 CYLINDER 240 C.I.D. ENGINE
1971 FORD

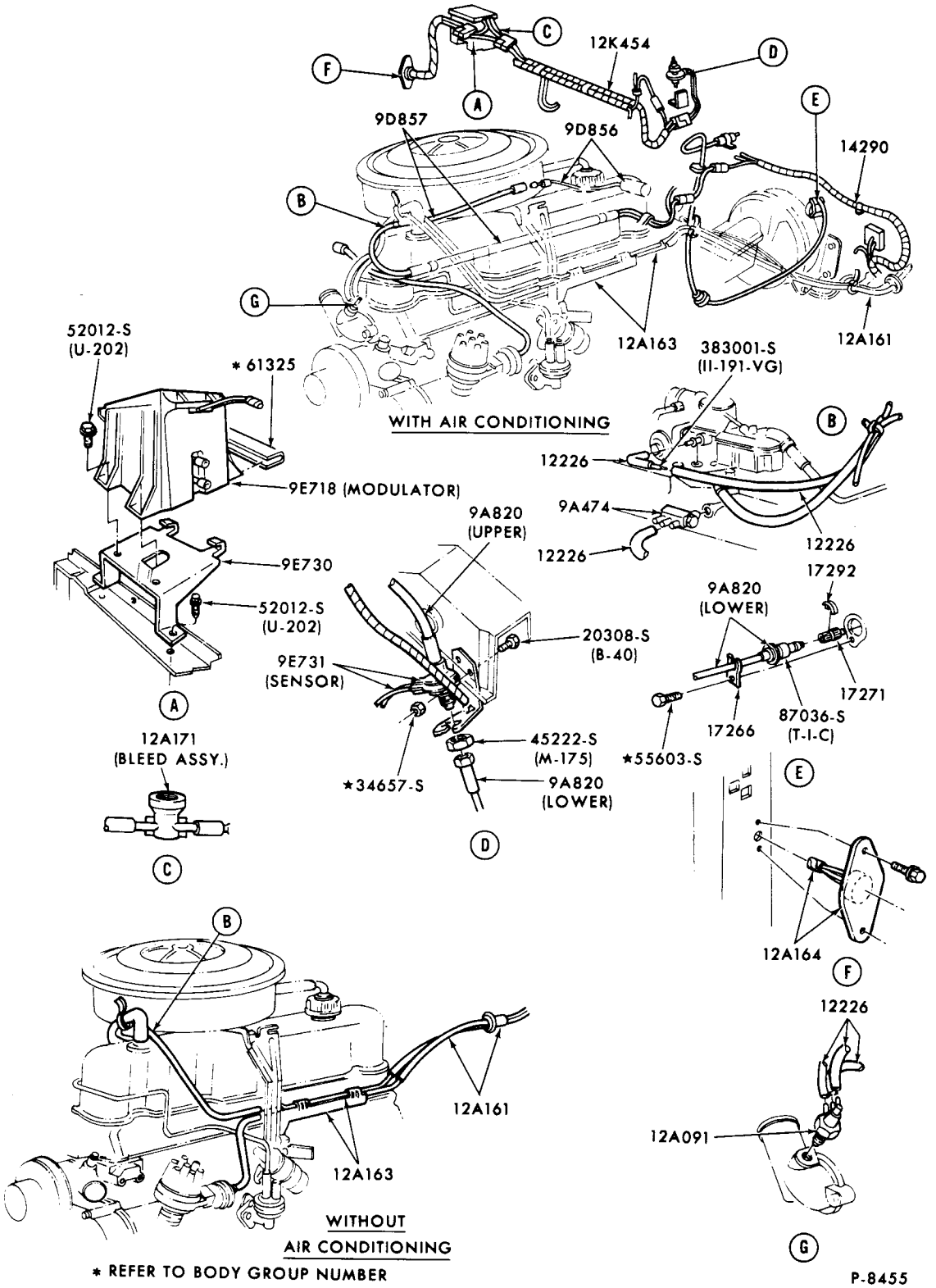

DISTRIBUTOR MODULATOR-6 CYLINDER 250 C.I.D. ENGINE
1971 TORINO

COPYRIGHT © 1975 — FORD MOTOR COMPANY — DEARBORN, MICHIGAN

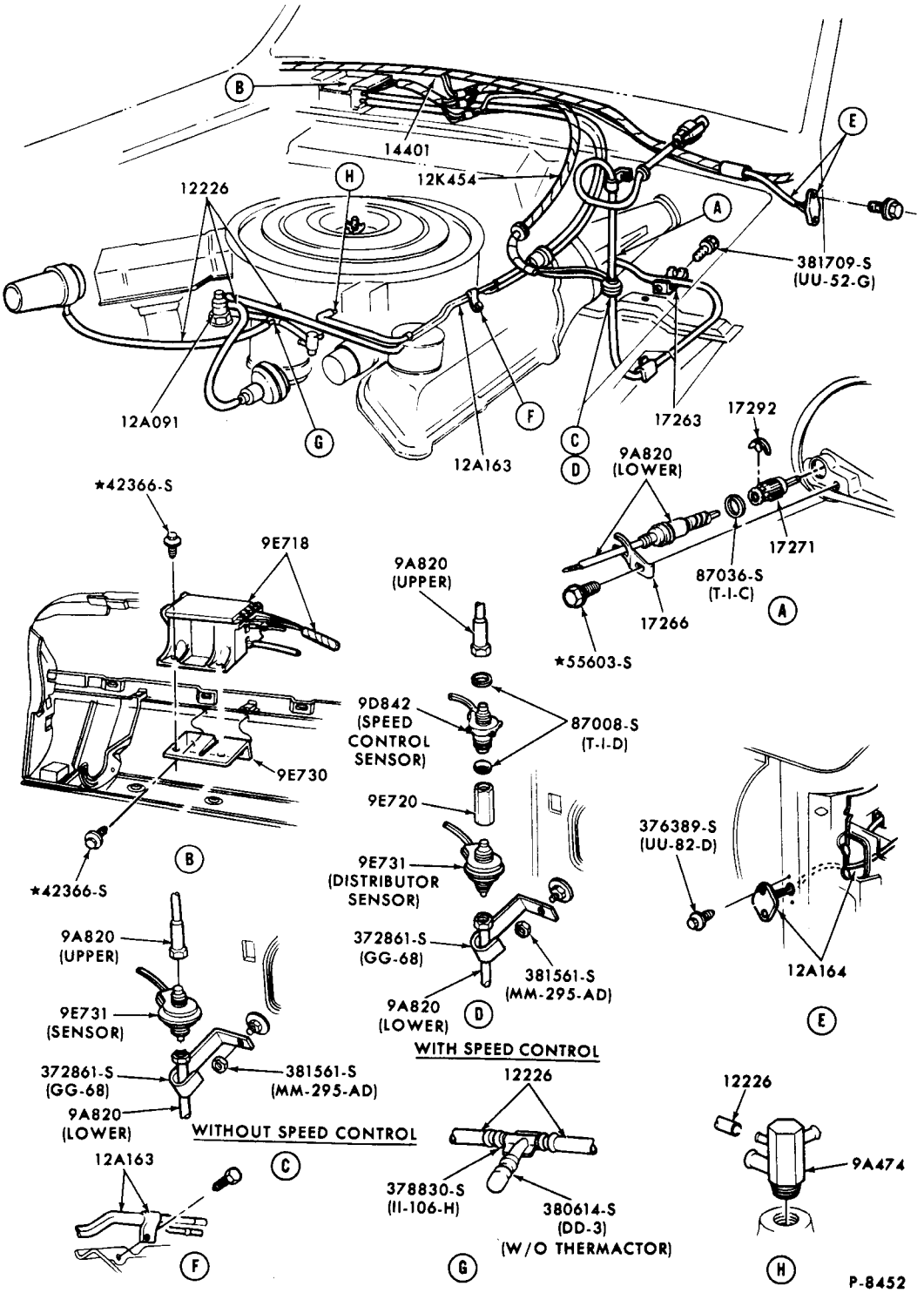

DISTRIBUTOR MODULATOR-8 CYLINDER 429 C.I.D. ENGINE
1971 THUNDERBIRD

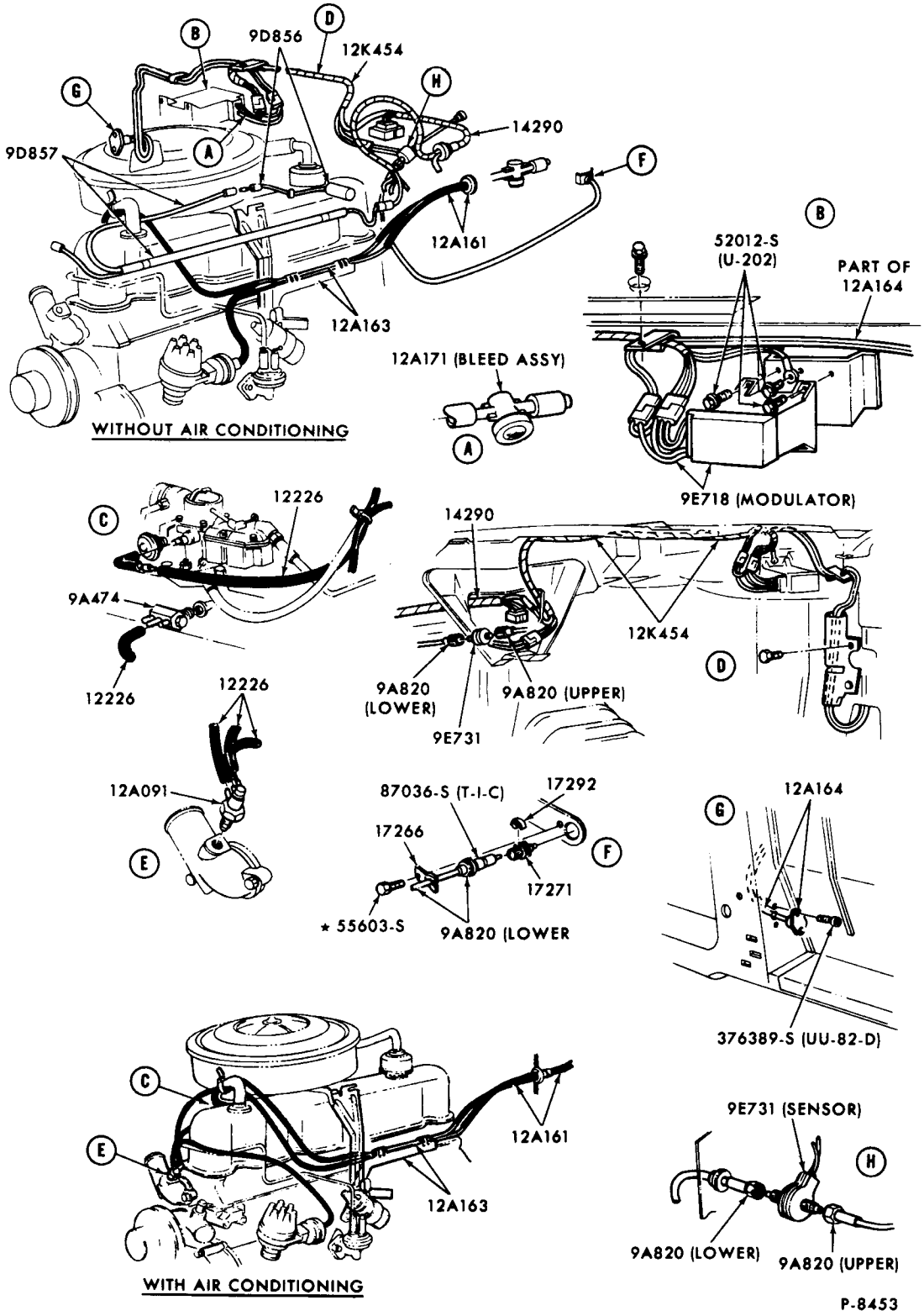

DISTRIBUTOR MODULATOR-6 CYLINDER 250 C.I.D. ENGINE
1971 MUSTANG

COPYRIGHT © 1975 — FORD MOTOR COMPANY — DEARBORN, MICHIGAN

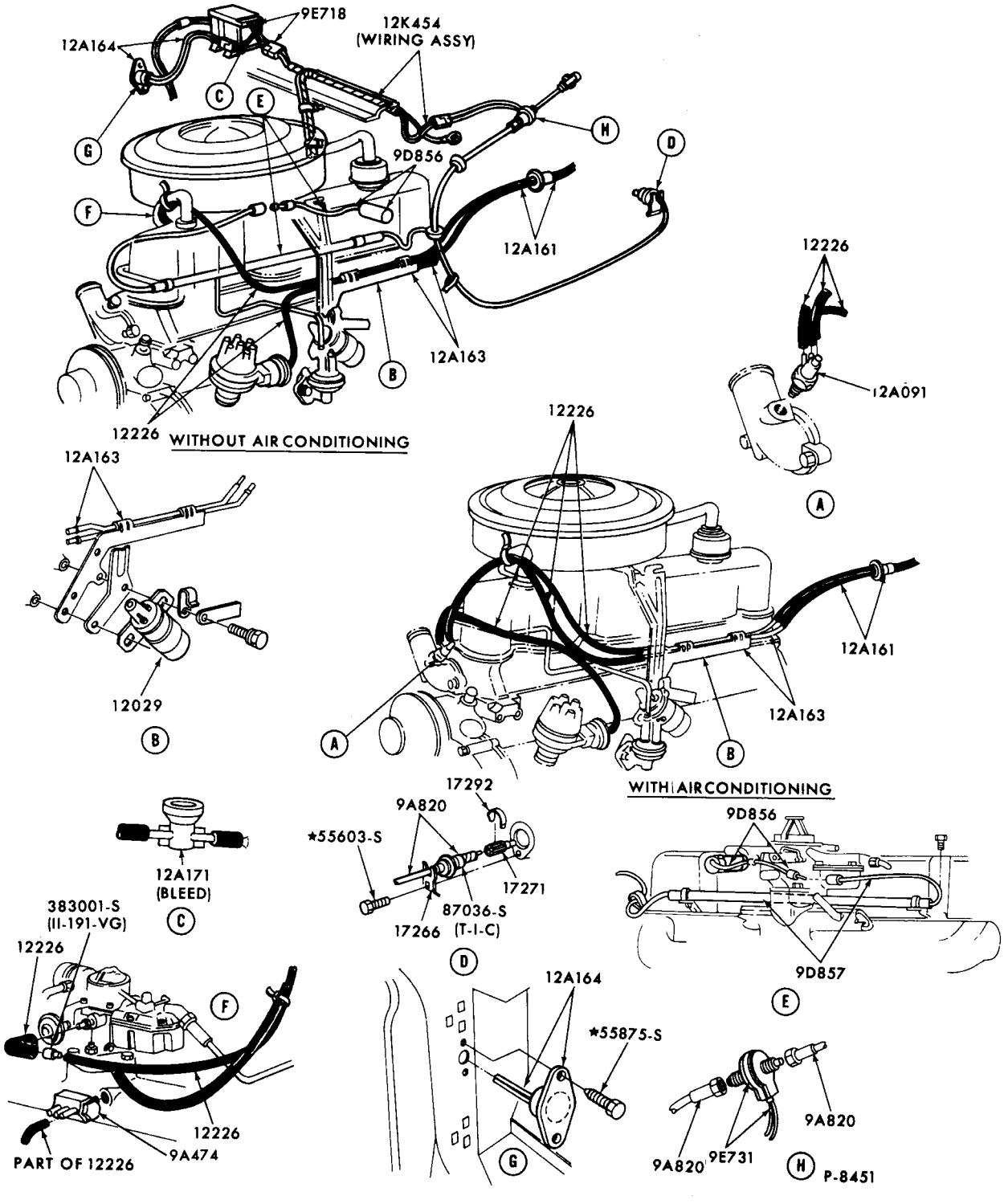

DISTRIBUTOR MODULATOR-6 CYLINDER 170,200,250 C.I.D. ENGINES
1971 MAVERICK

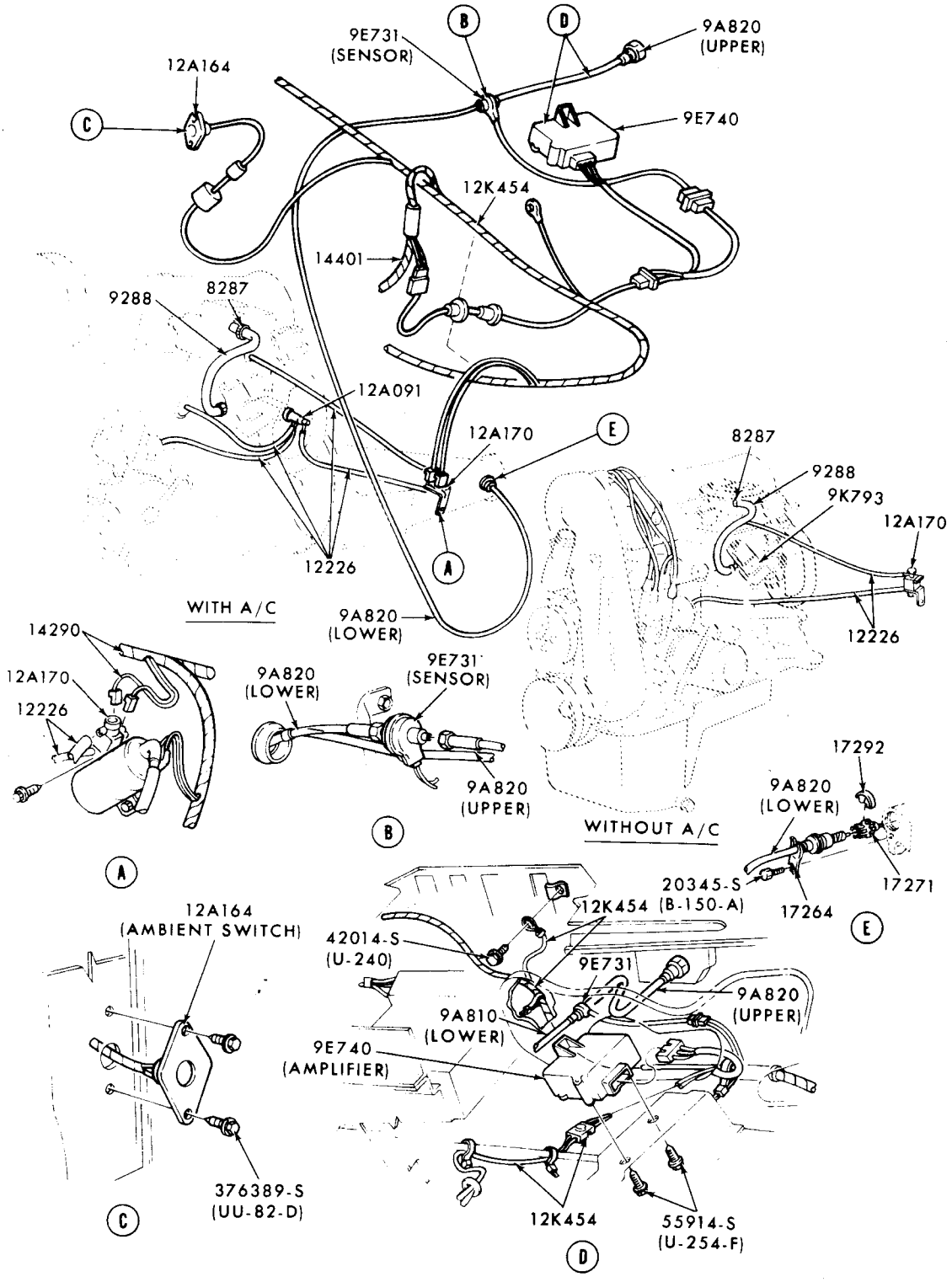

P-9041

ELECTRONIC SPARK CONTROL SYSTEM (E.S.C.)-4 CYL. 122 C.I.D. ENGINE
1972 PINTO

COPYRIGHT © 1975 — FORD MOTOR COMPANY — DEARBORN, MICHIGAN

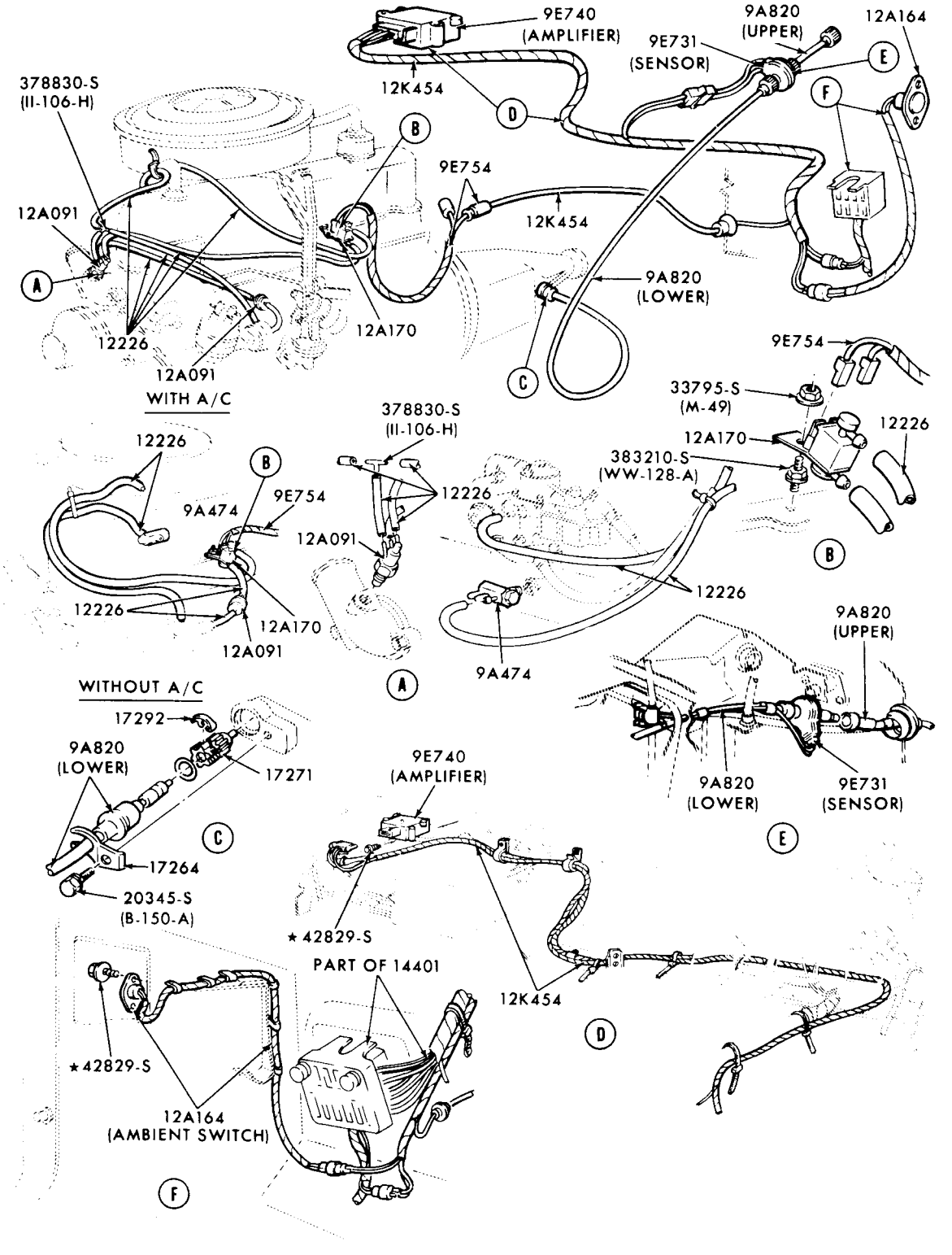

P-9042

ELECTRONIC SPARK CONTROL SYSTEM (E.S.C.)-6 CYL. 250 C.I.D. ENGINE
1972 TORINO

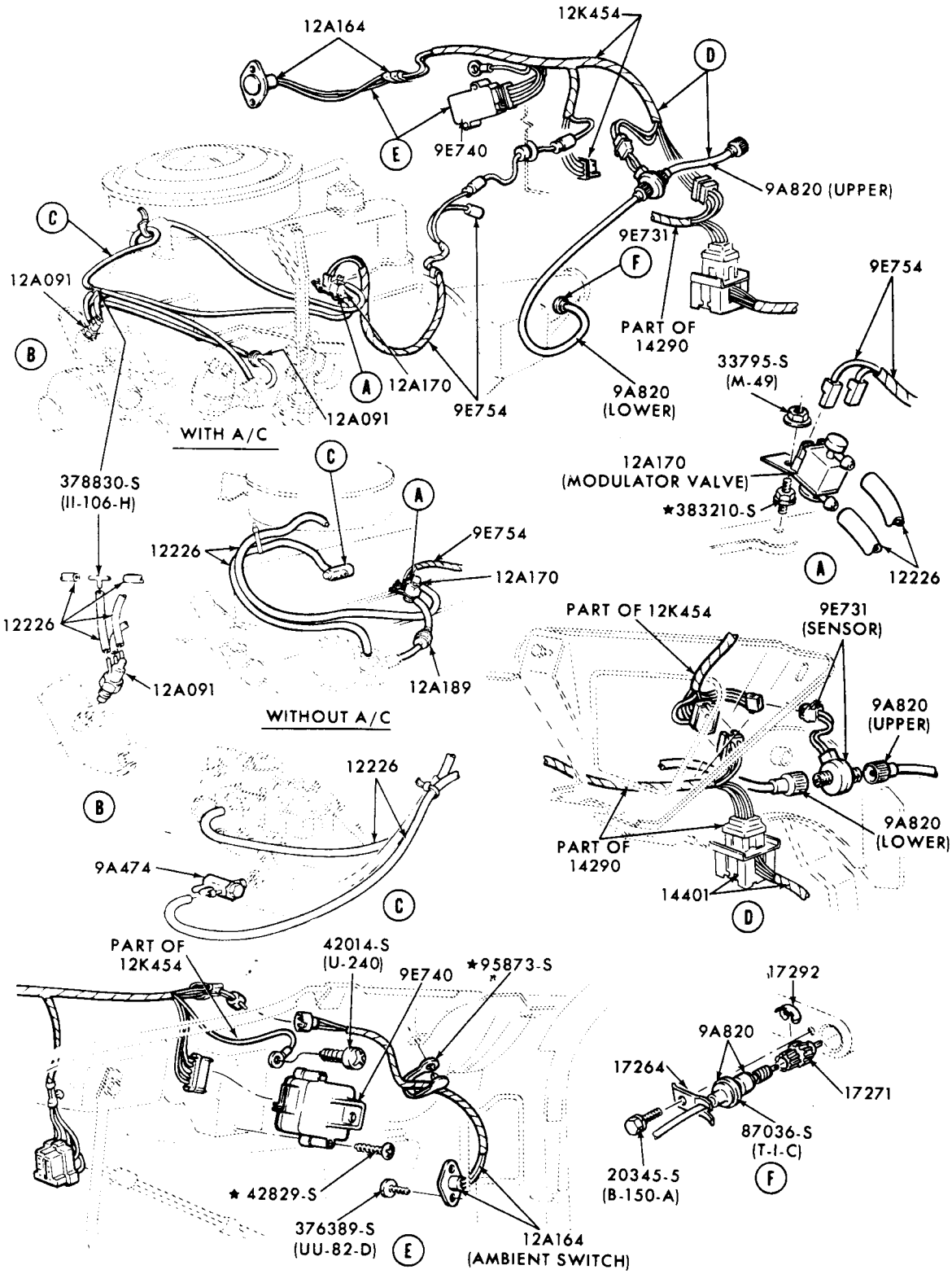

P-9043

ELECTRONIC SPARK CONTROL SYSTEM (E.S.C.)-6 CYL. 250 C.I.D. ENGINE
1972 MUSTANG

COPYRIGHT © 1975 — FORD MOTOR COMPANY — DEARBORN, MICHIGAN

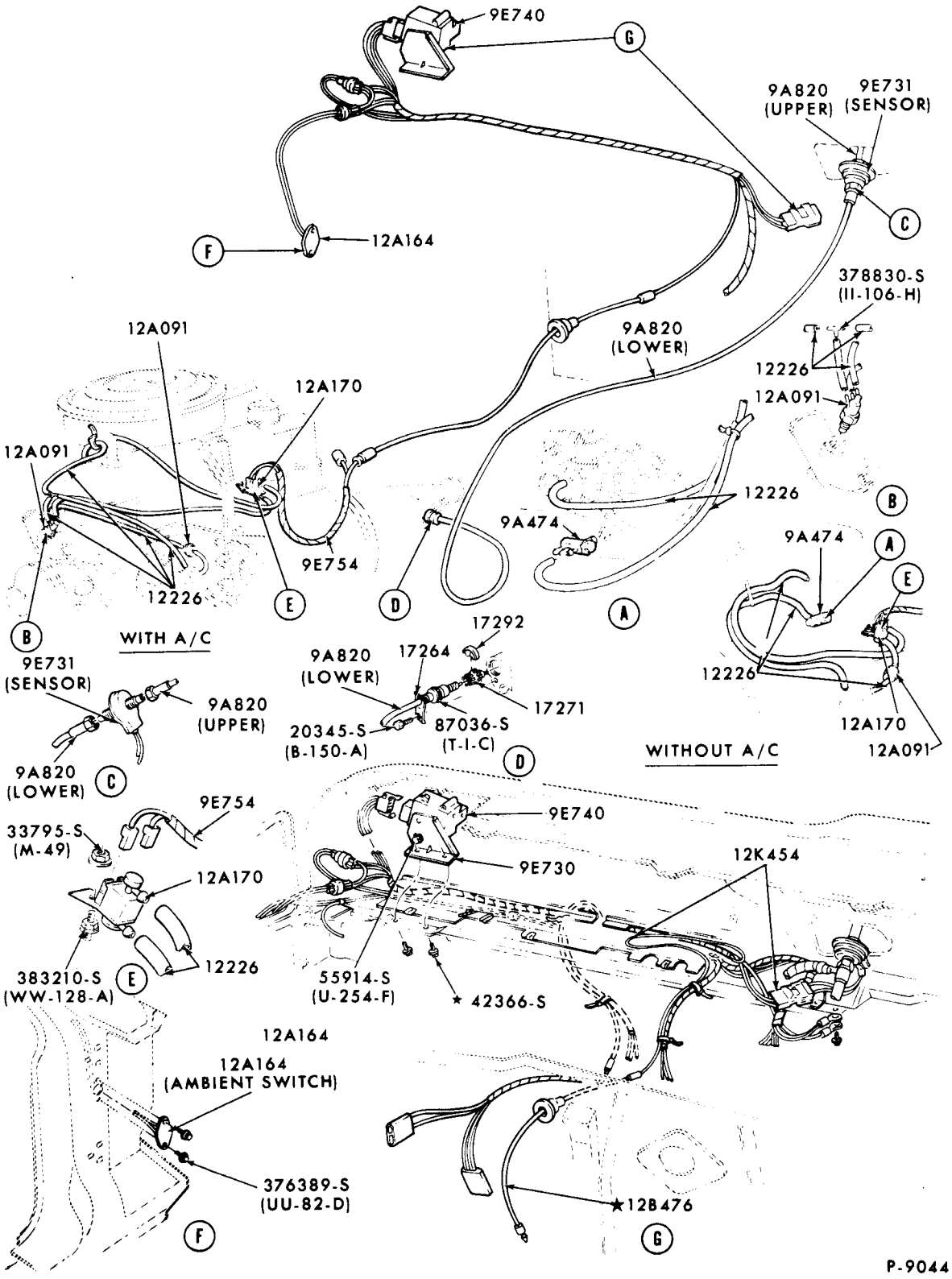

ELECTRONIC SPARK CONTROL SYSTEM (E.S.C.)-6 CYL. 170, 200, 250 C.I.D. ENGINES
1972 MAVERICK

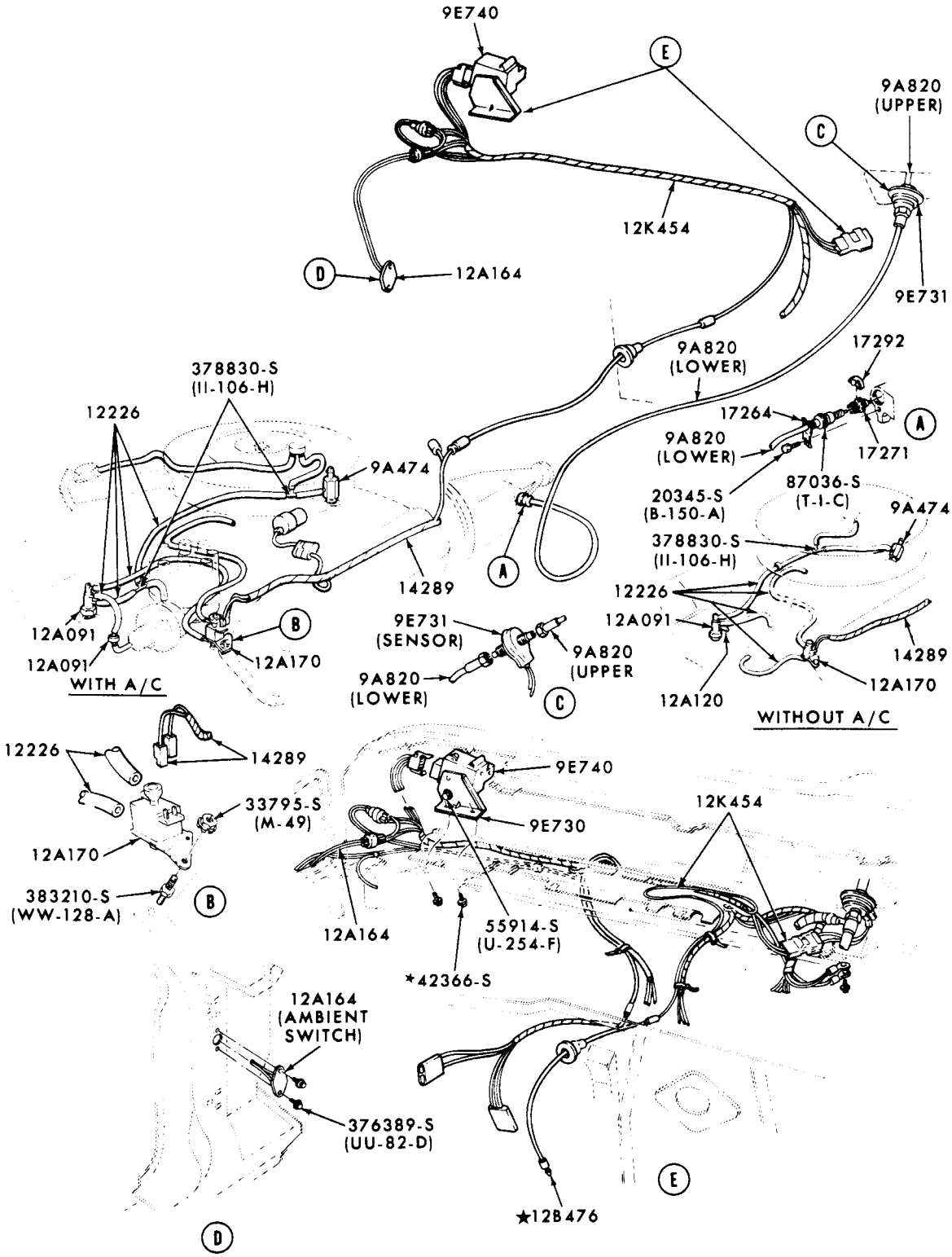

P-9045

ELECTRONIC SPARK CONTROL SYSTEM (E.S.C.)-8 CYL. 302-2V C.I.D. ENGINE
1972 MAVERICK

COPYRIGHT © 1975 — FORD MOTOR COMPANY — DEARBORN, MICHIGAN

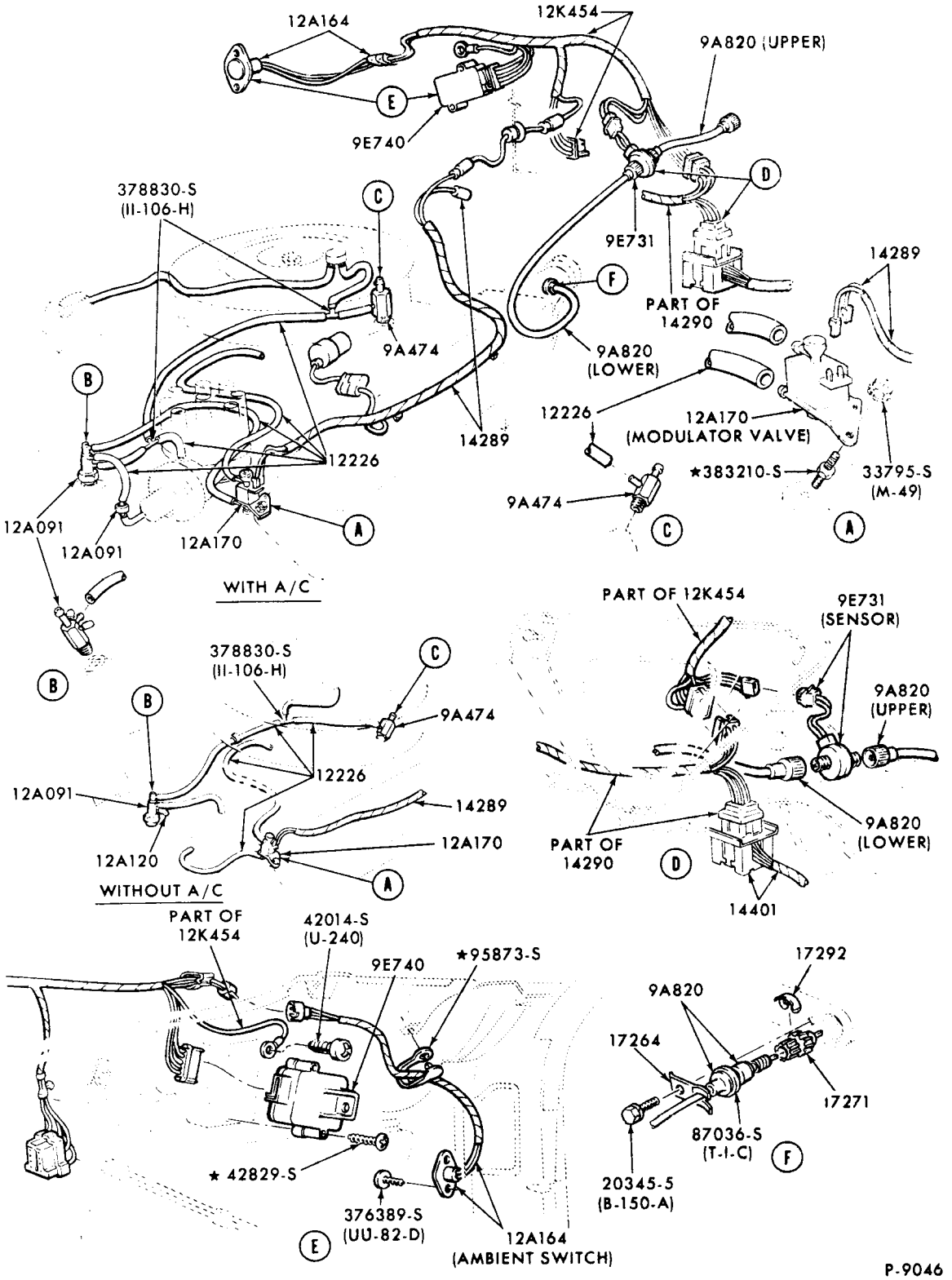

ELECTRONIC SPARK CONTROL SYSTEM (E.S.C.)-8 CYL. 302-2V C.I.D. ENGINE

1972 MUSTANG

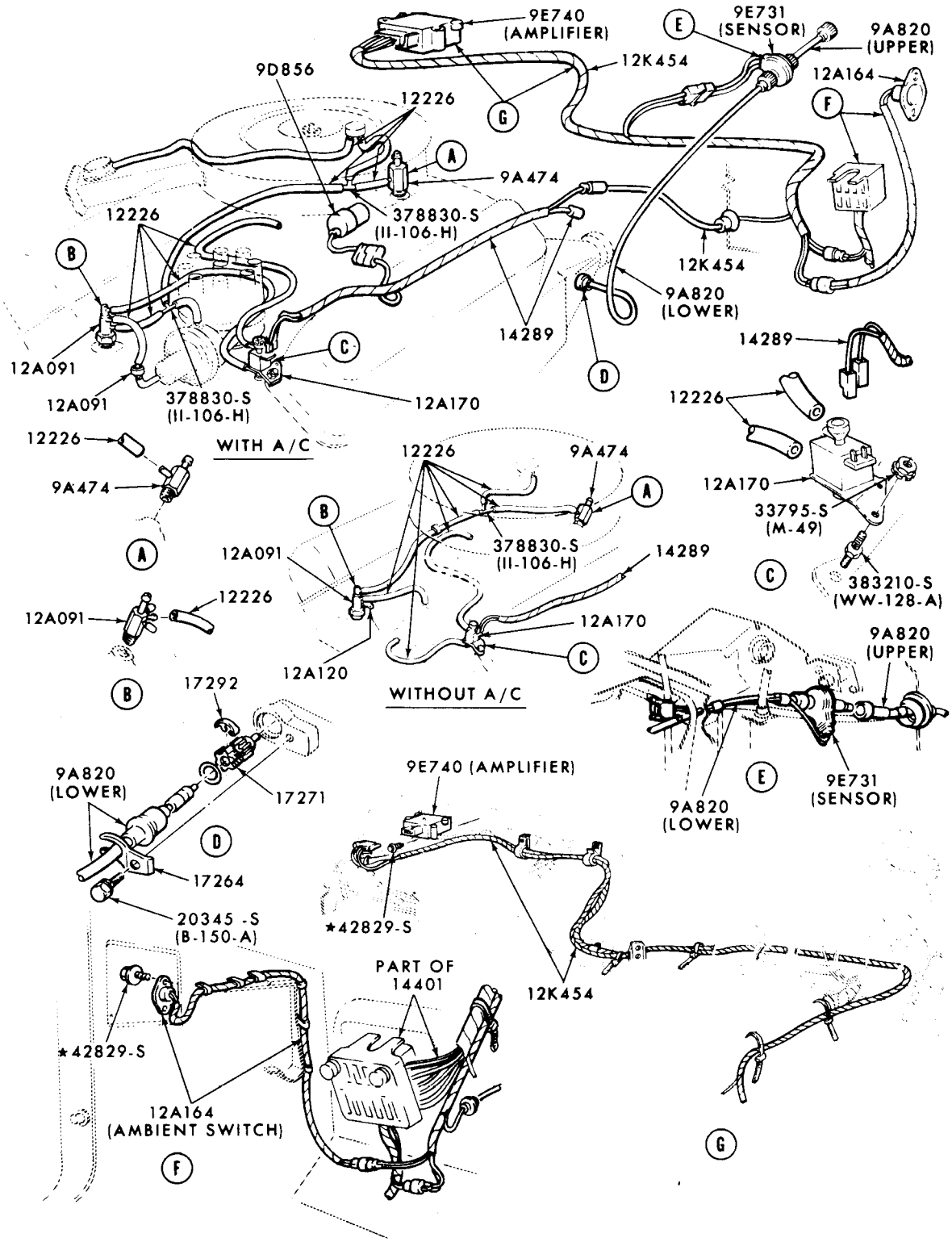

P-9047

ELECTRONIC SPARK CONTROL SYSTEM (E.S.C.)-8 CYL. 302-2V C.I.D. ENGINE
1972 TORINO

COPYRIGHT © 1975 — FORD MOTOR COMPANY — DEARBORN, MICHIGAN

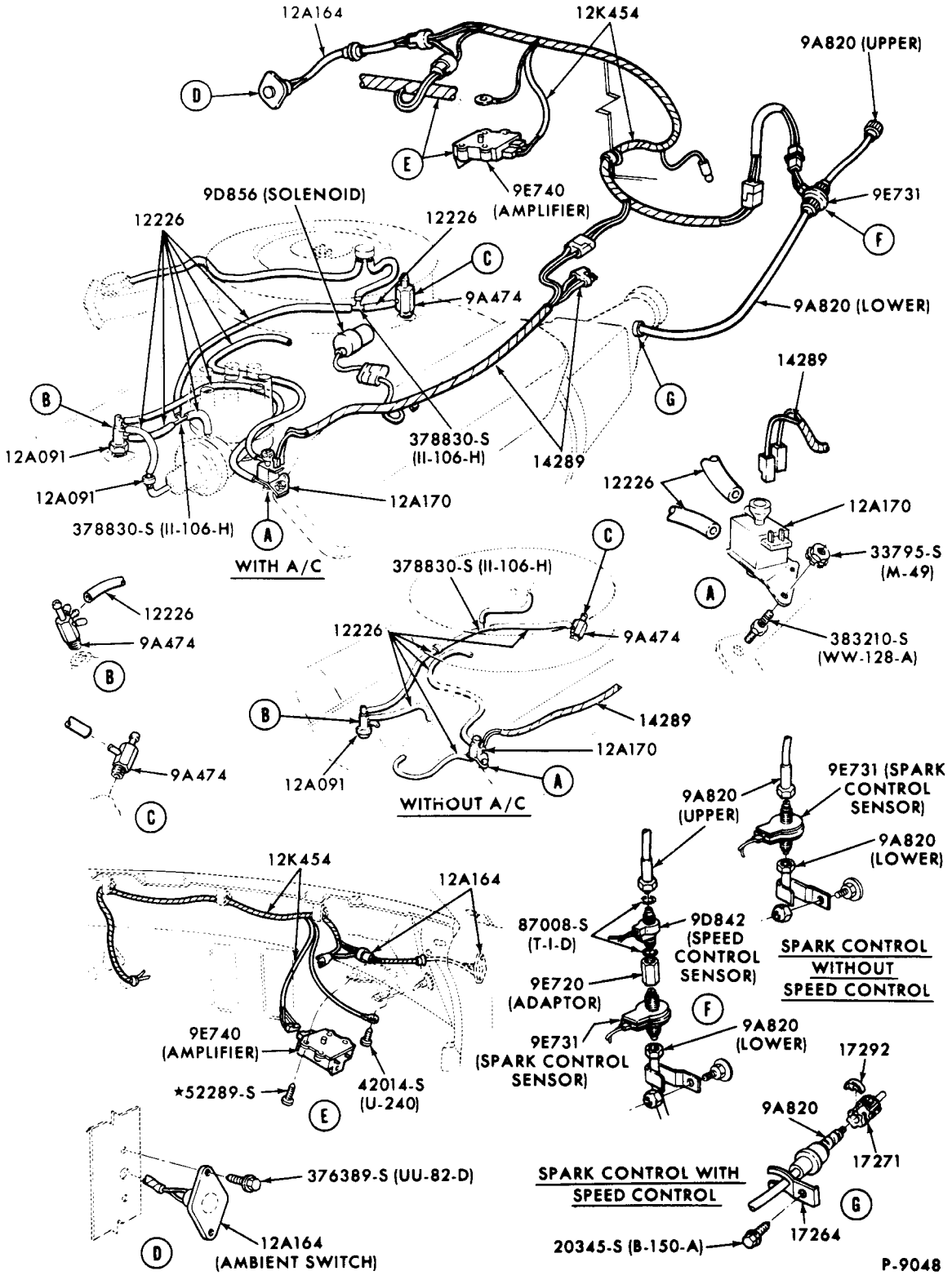

ELECTRONIC SPARK CONTROL SYSTEM (E.S.C.)-8 CYL. 302-2V C.I.D. ENGINE

1972 FORD

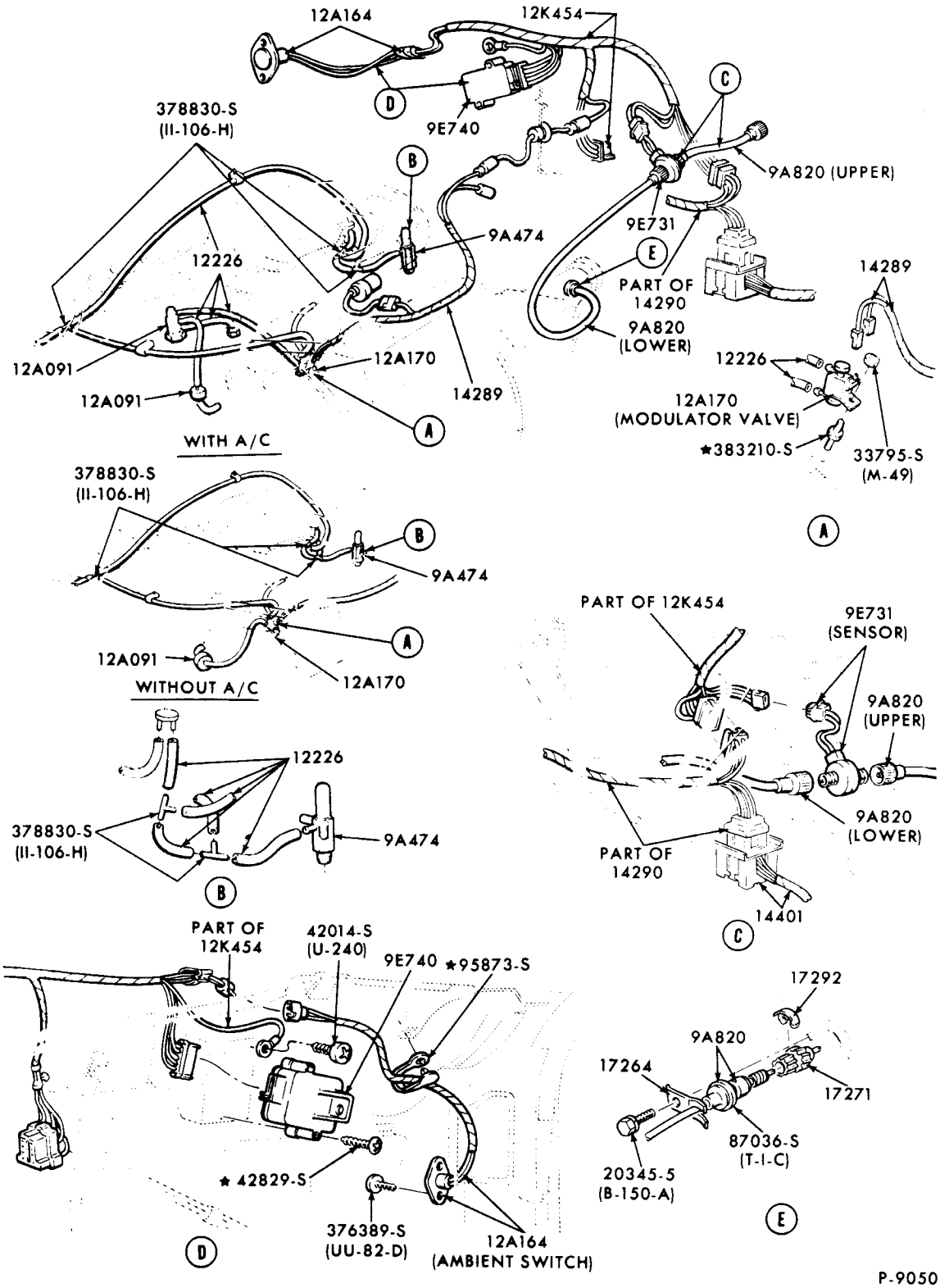

ELECTRONIC SPARK CONTROL SYSTEM (E.S.C.)-8 CYL. 351-4V CJ ENGINE
1972 MUSTANG - WITH RAM AIR HOOD

COPYRIGHT © 1975 — FORD MOTOR COMPANY — DEARBORN, MICHIGAN

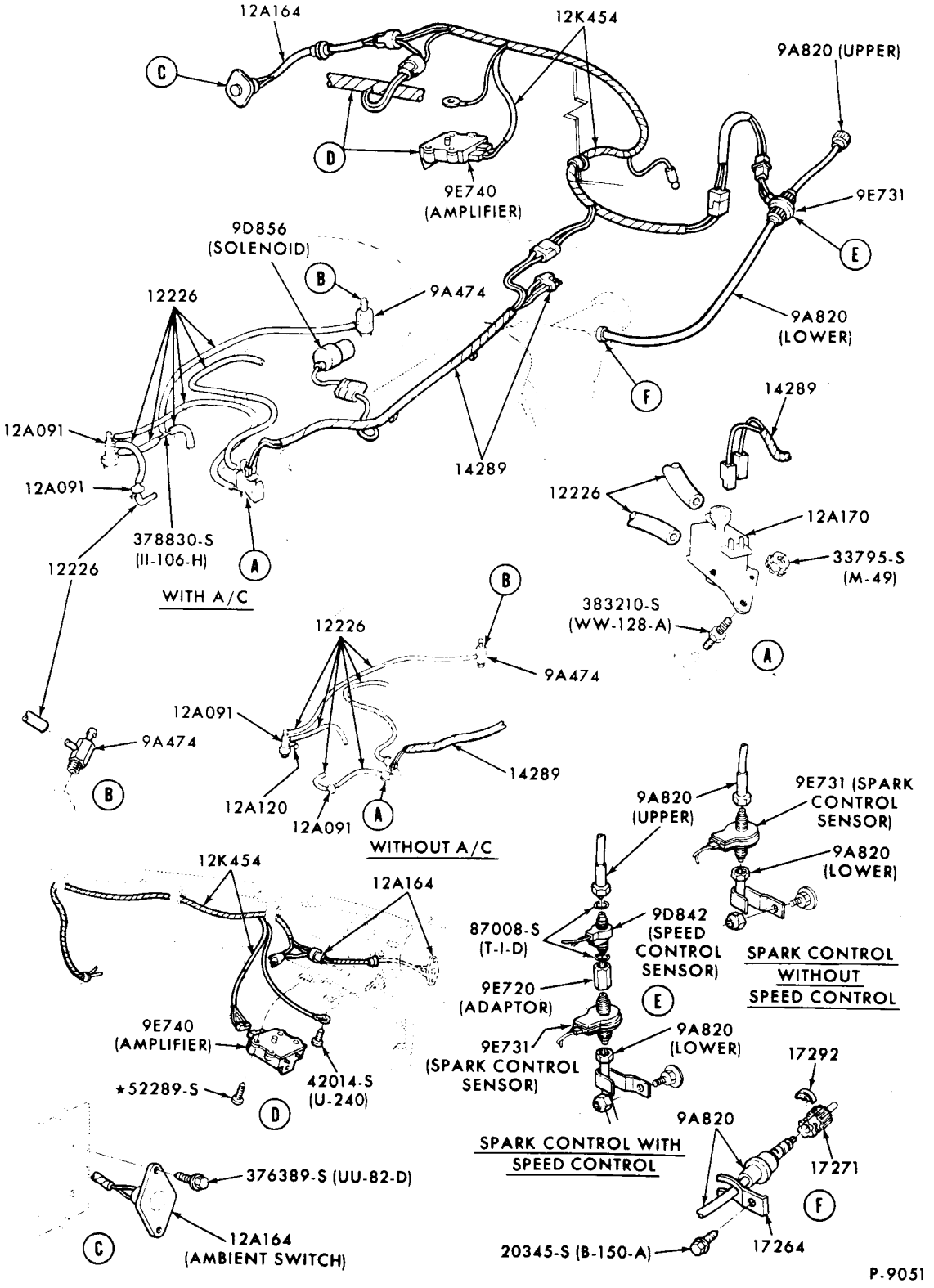

ELECTRONIC SPARK CONTROL SYSTEM (E.S.C.)-8 CYL. 351-W C.I.D. ENGINE

1972 FORD

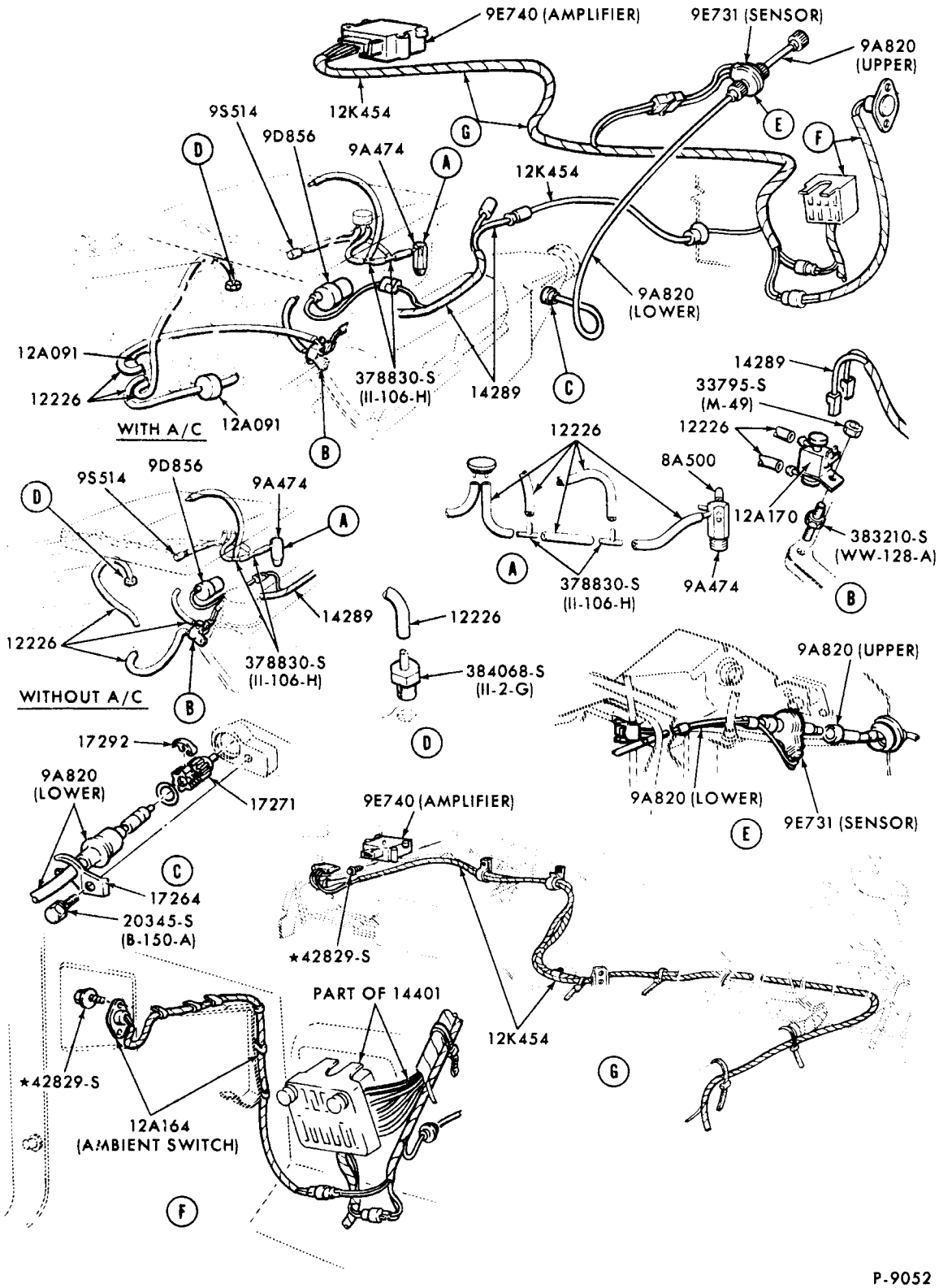

P-9052

ELECTRONIC SPARK CONTROL SYSTEM (E.S.C.)-8 CYL. 351-4V CJ ENGINE

1972 TORINO - WITH RAM AIR HOOD

COPYRIGHT © 1975 — FORD MOTOR COMPANY — DEARBORN, MICHIGAN

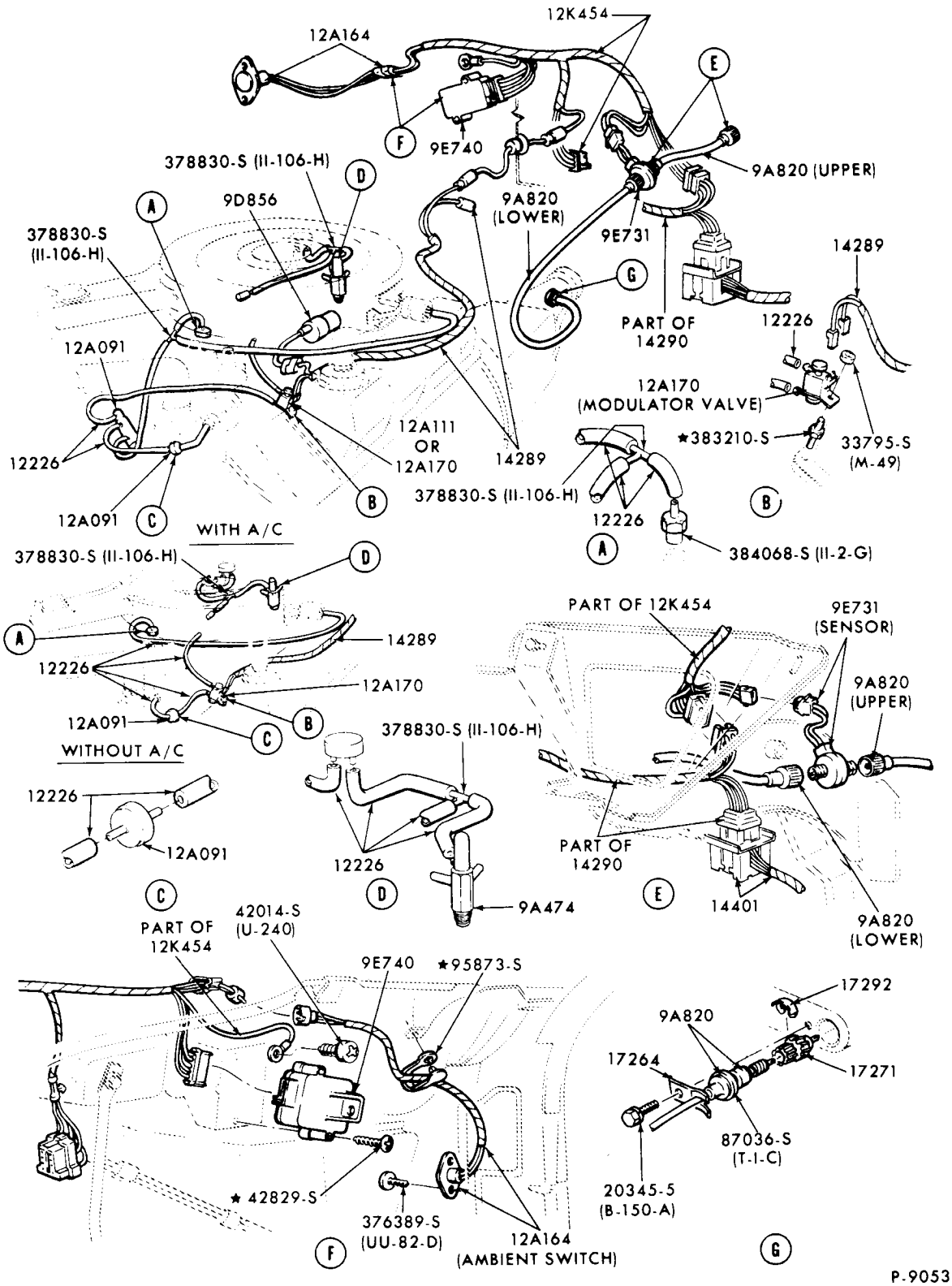

ELECTRONIC SPARK CONTROL SYSTEM (E.S.C.)-8 CYL. 351-4V CJ ENGINE
1972 MUSTANG - WITHOUT RAM AIR HOOD

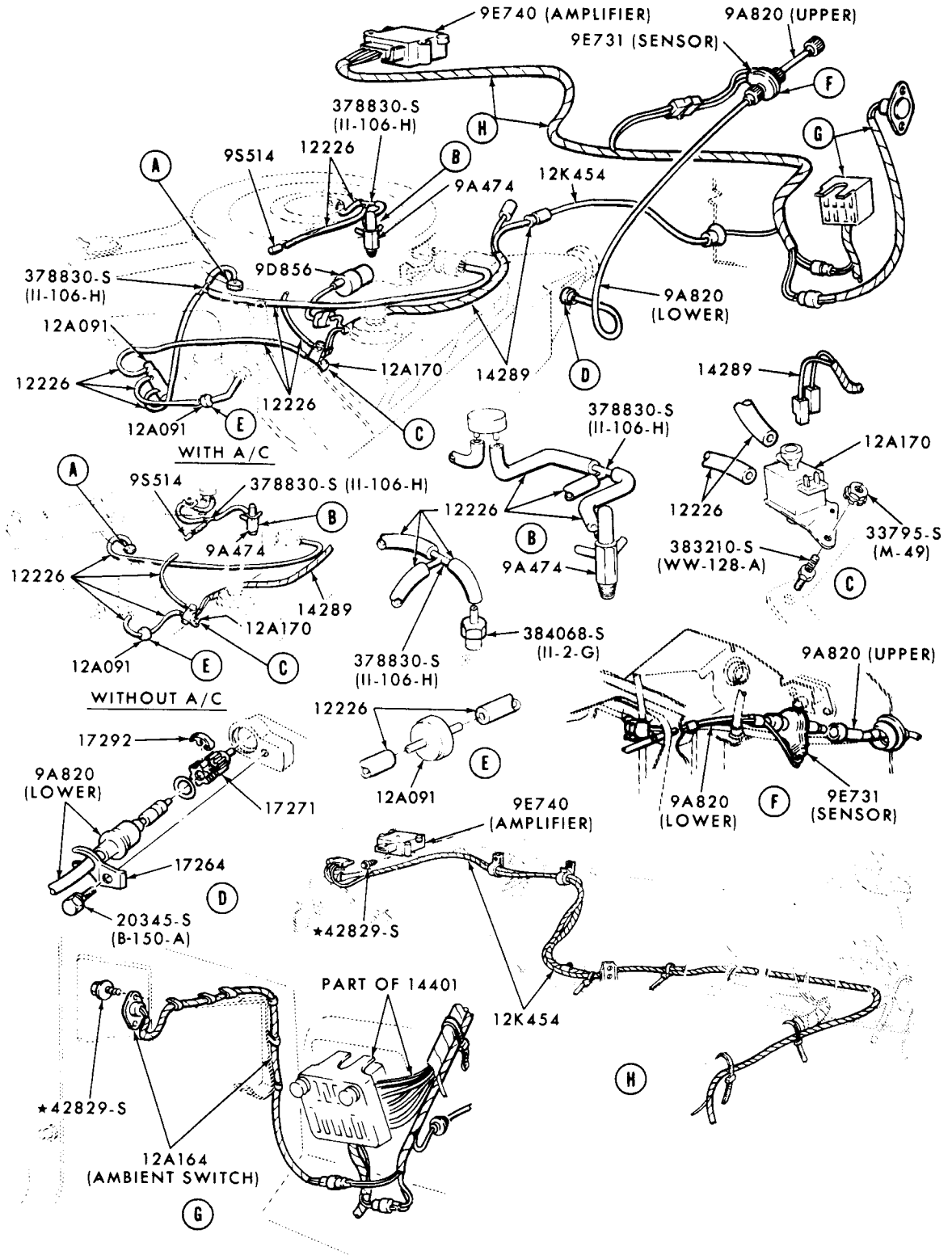

P-9054

ELECTRONIC SPARK CONTROL SYSTEM (E.S.C.)-8 CYL. 351-4V CJ ENGINE

1972 TORINO - WITHOUT RAM AIR HOOD

COPYRIGHT © 1975 — FORD MOTOR COMPANY — DEARBORN, MICHIGAN

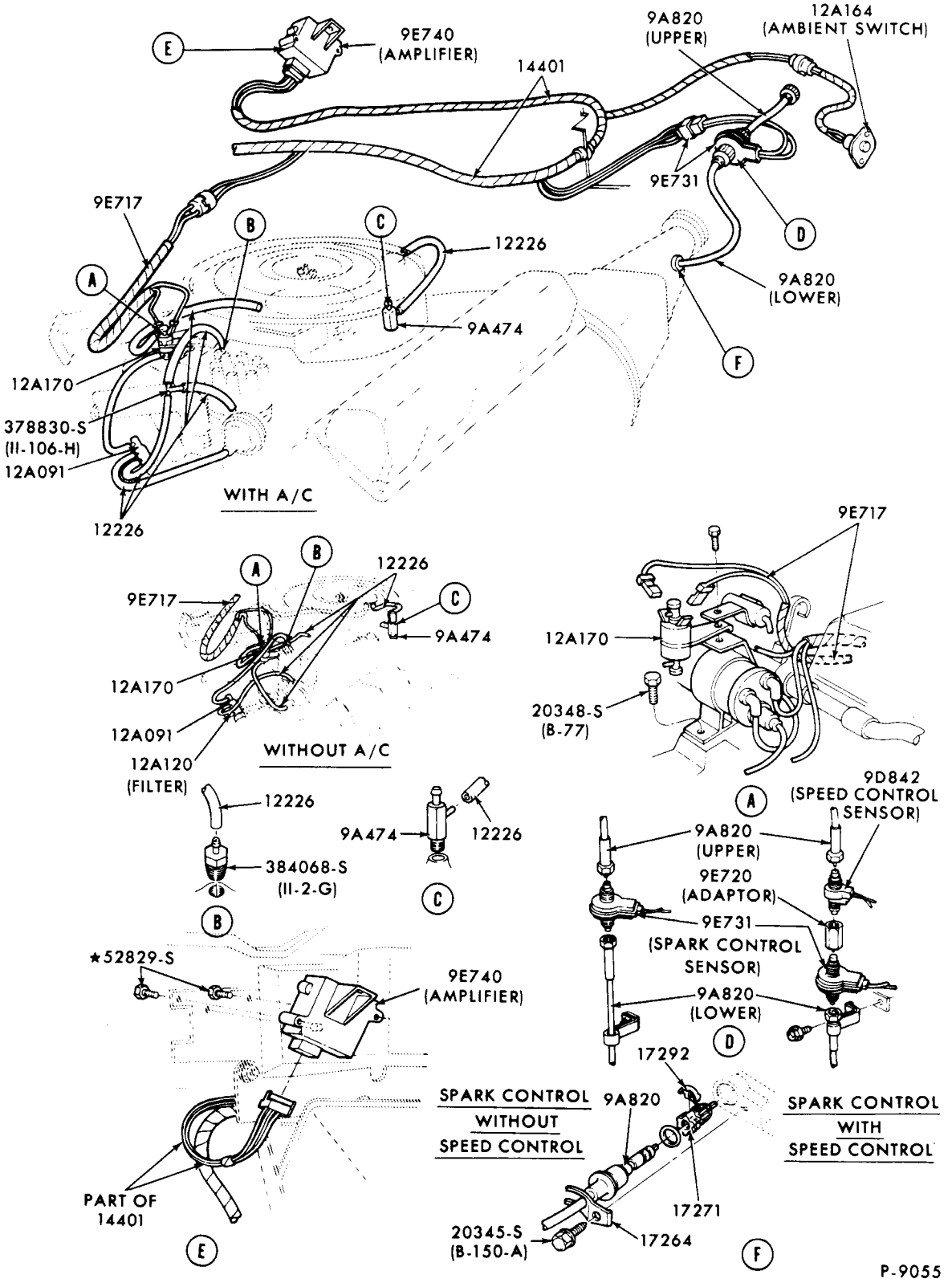

ELECTRONIC SPARK CONTROL SYSTEM (E.S.C.)-8 CYL. 400 C.I.D. ENGINE
1972 THUNDERBIRD

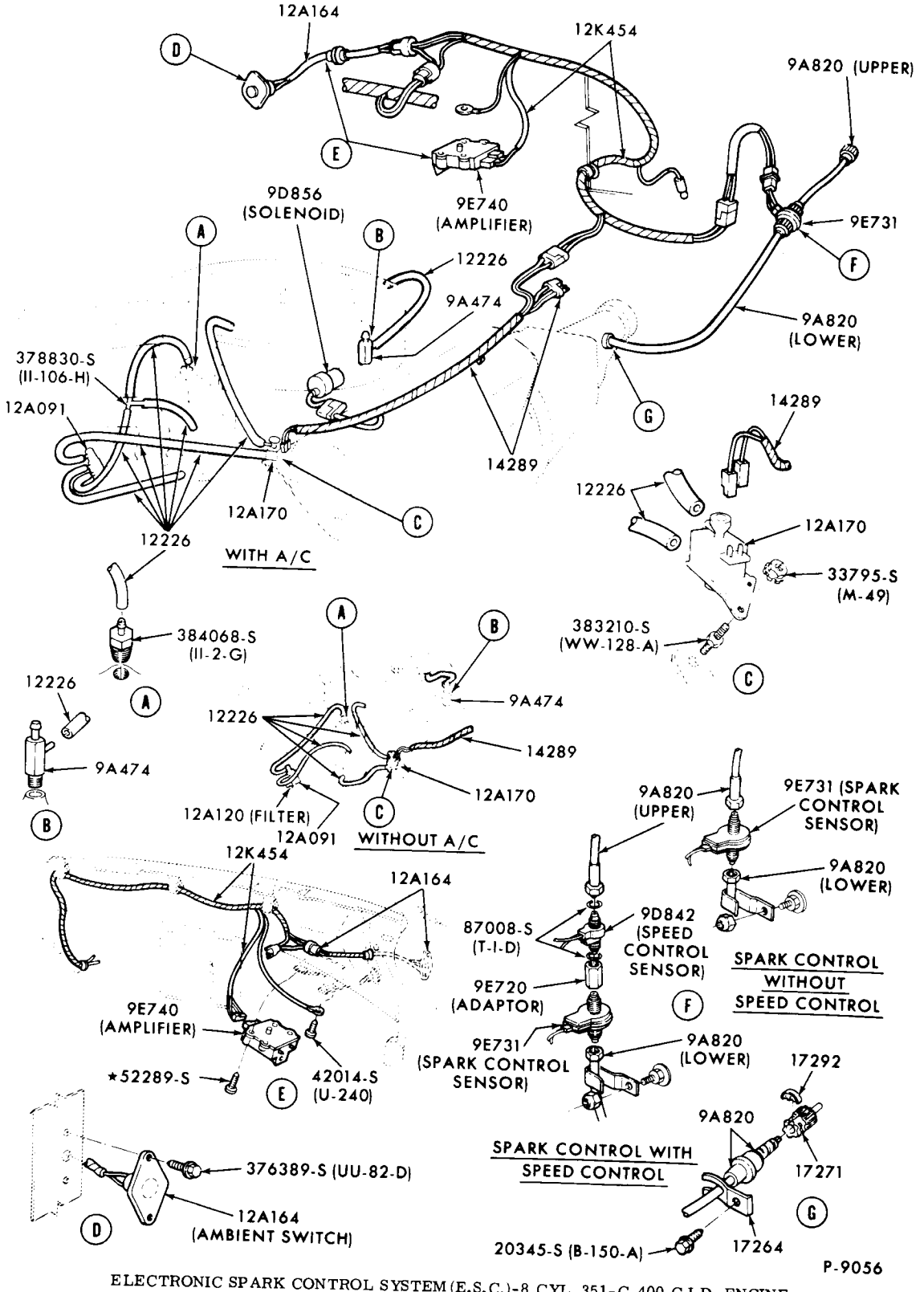

ELECTRONIC SPARK CONTROL SYSTEM (E.S.C.)-8 CYL. 351-C,400 C.I.D. ENGINE
1972 FORD

COPYRIGHT © 1975 — FORD MOTOR COMPANY — DEARBORN, MICHIGAN

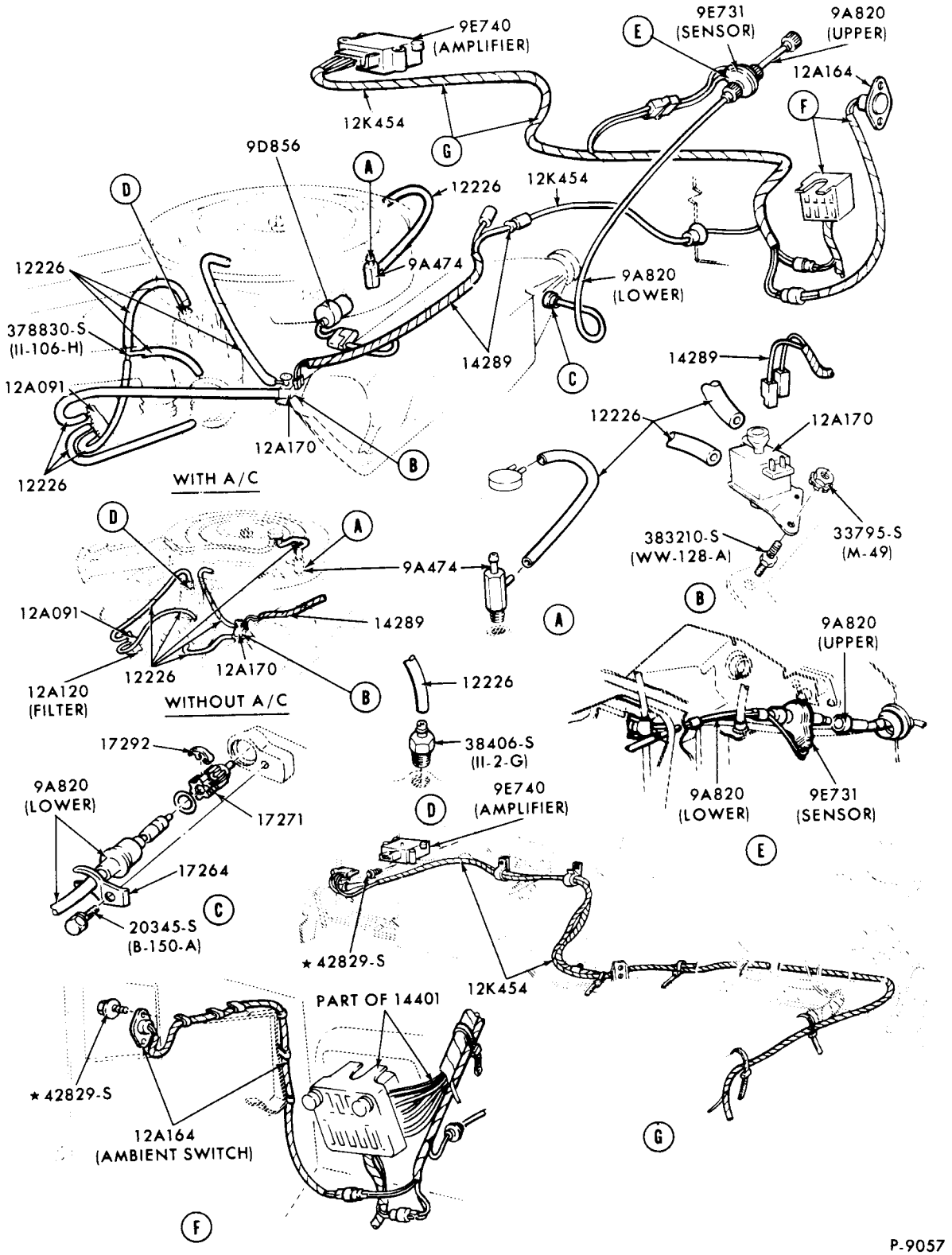

ELECTRONIC SPARK CONTROL SYSTEM (E.S.C.)-8 CYL. 351-2V, 400-2V C.I.D. ENGINES
1972 TORINO

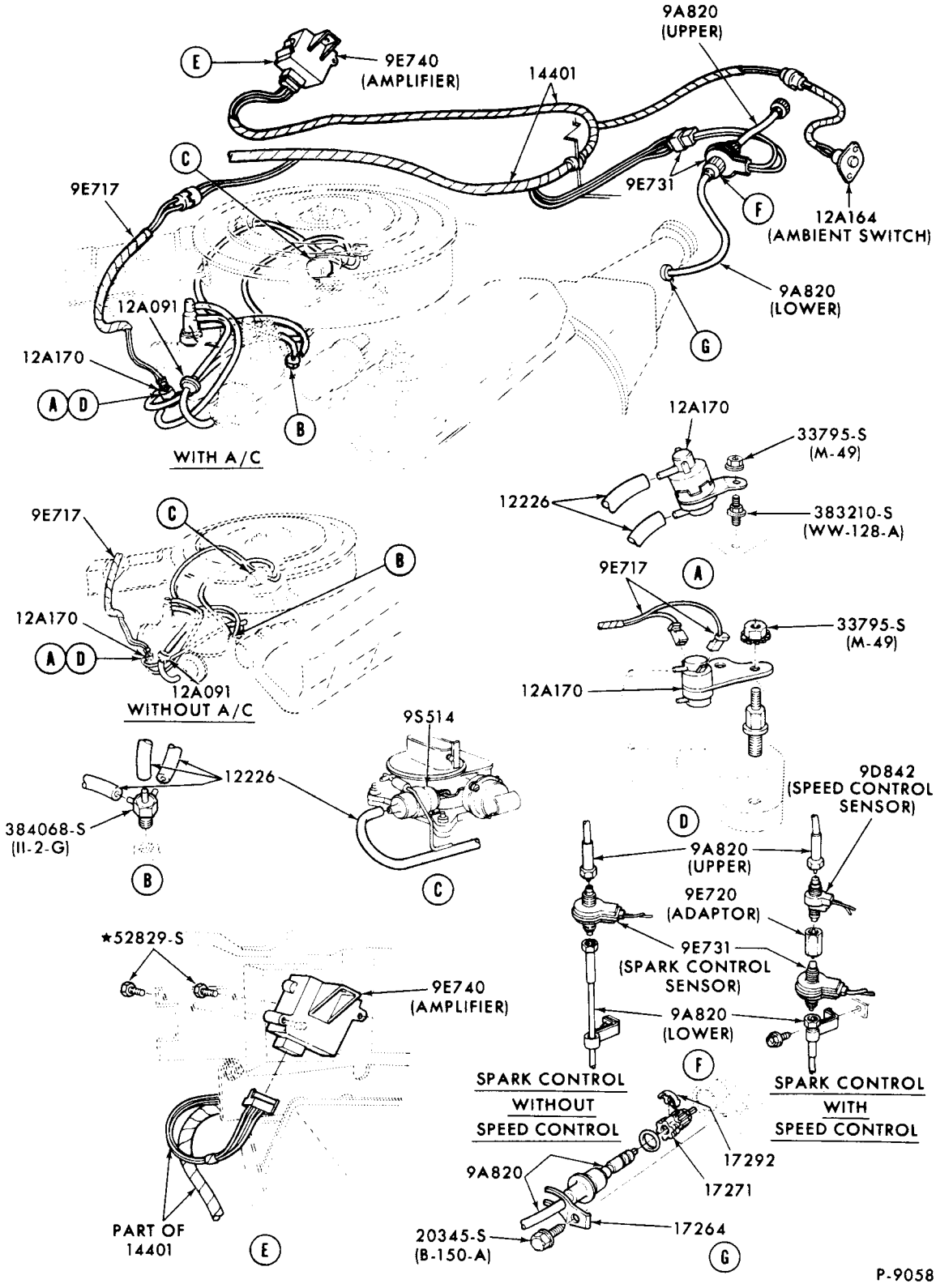

ELECTRONIC SPARK CONTROL SYSTEM (E.S.C.)-8 CYLINDER 429, 460 ENGINE
1972 THUNDERBIRD

COPYRIGHT © 1975 — FORD MOTOR COMPANY — DEARBORN, MICHIGAN

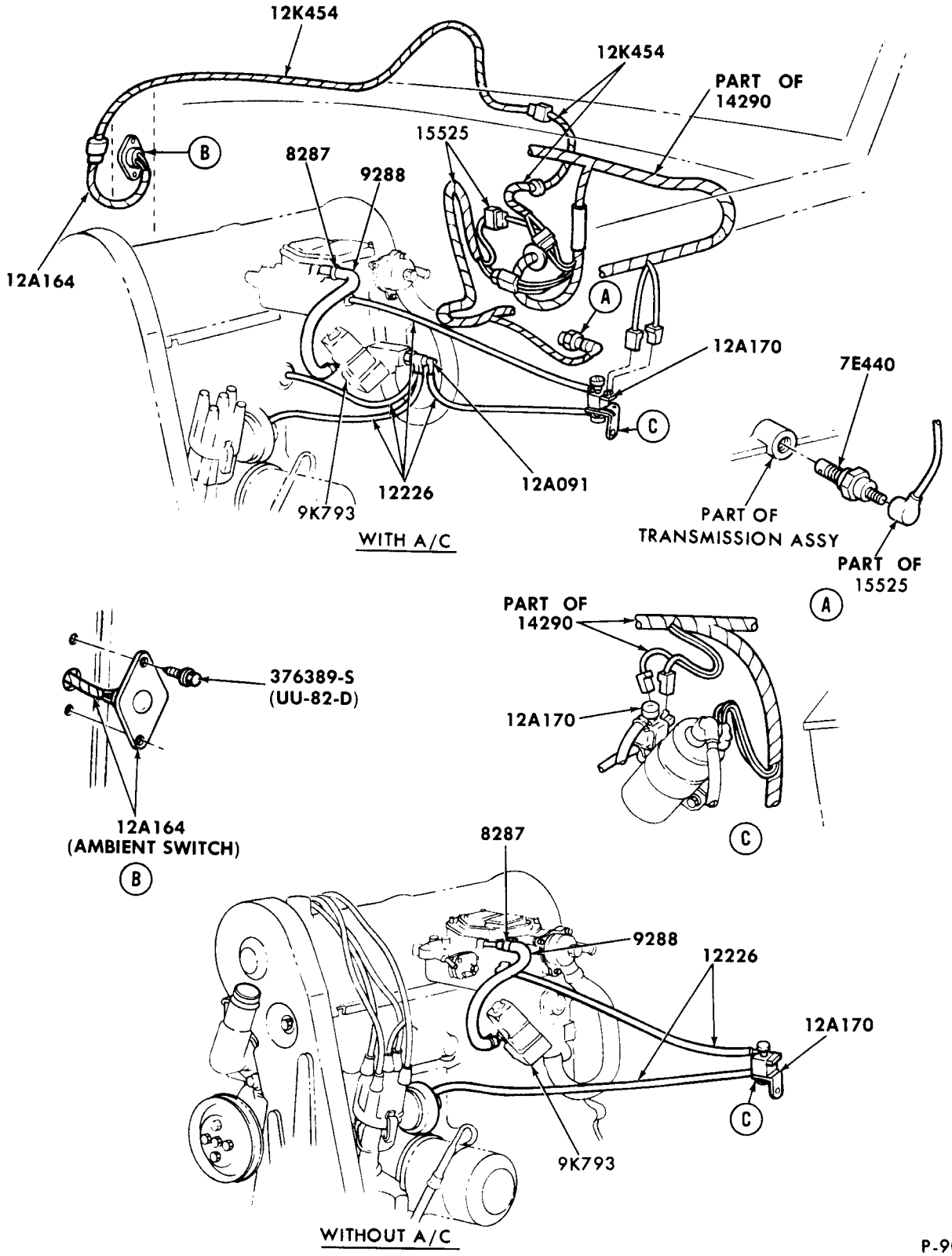

P-9060

TRANSMISSION REGULATED SPARK CONTROL SYSTEM (T.R.S.)-4 CYL. 122 C.I.D. ENGINE

1972 PINTO

COPYRIGHT © 1975 — FORD MOTOR COMPANY — DEARBORN, MICHIGAN

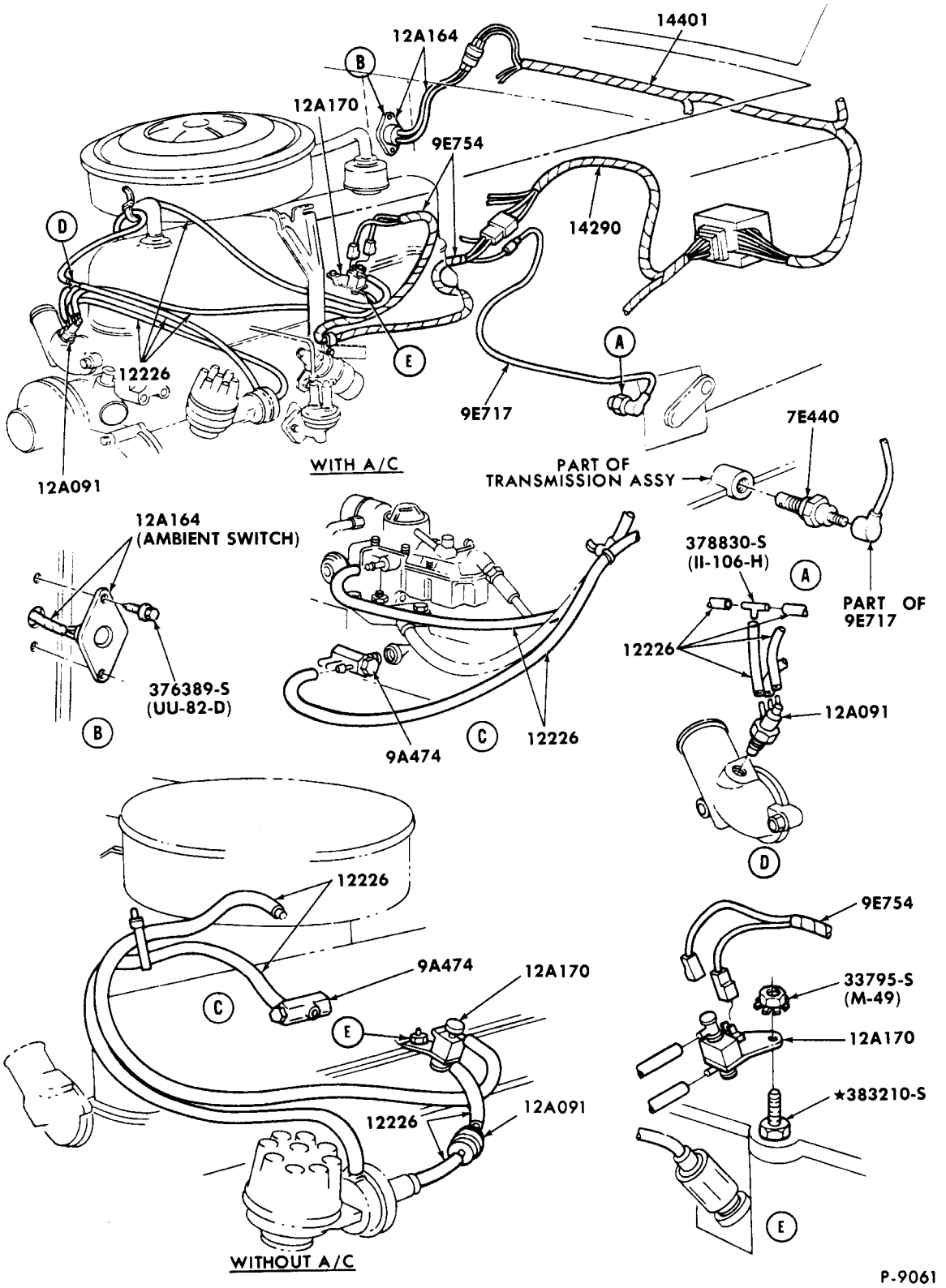

TRANSMISSION REGULATED SPARK CONTROL SYSTEM (T.R.S.)-6 CYL. 170,200, 250 C.I.D. ENGINES
1972 MAVERICK

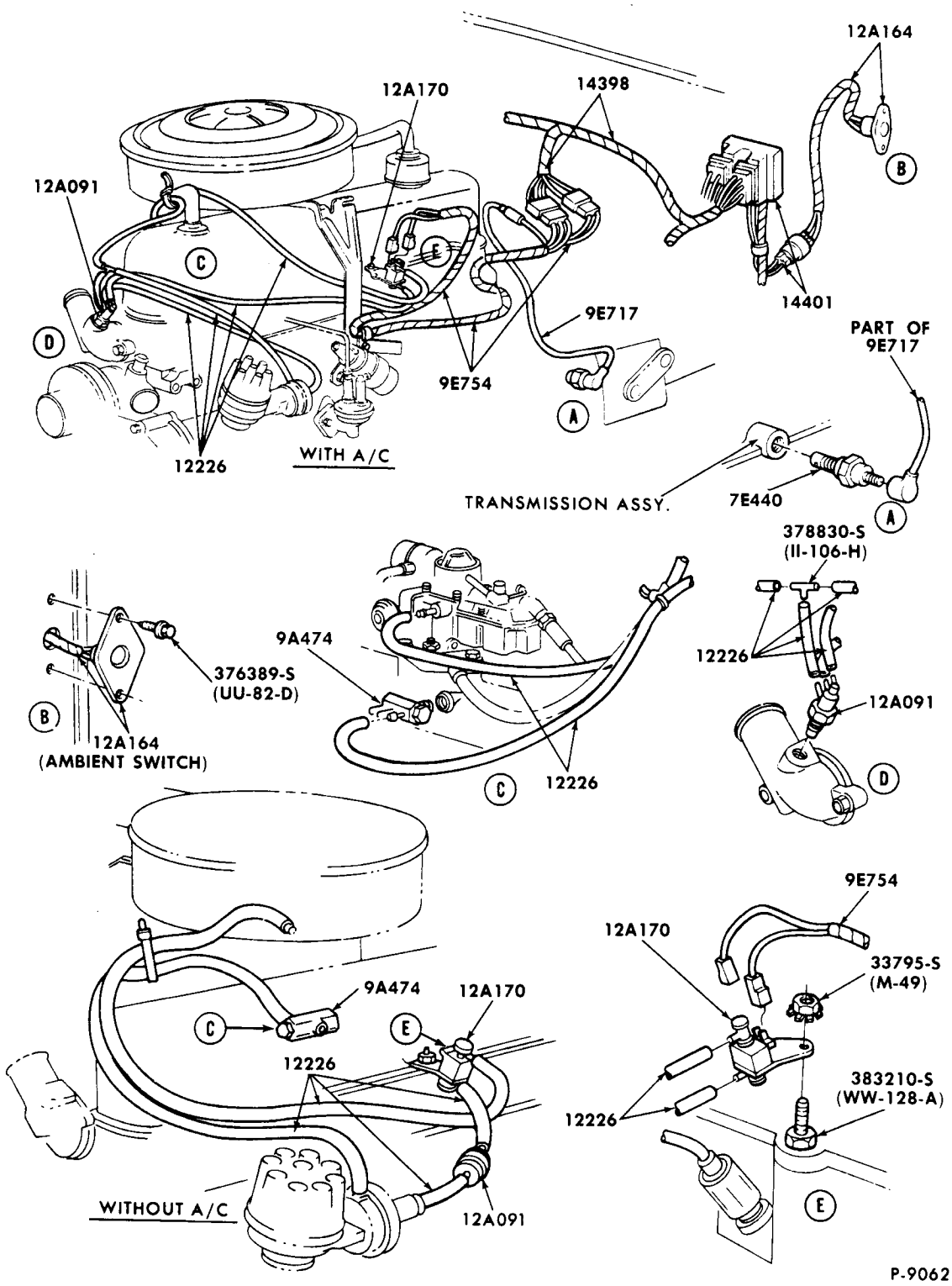

TRANSMISSION REGULATED SPARK CONTROL SYSTEM (T.R.S.)-6 CYL. 250 C.I.D. ENGINE
1972 TORINO

COPYRIGHT © 1975 — FORD MOTOR COMPANY — DEARBORN, MICHIGAN

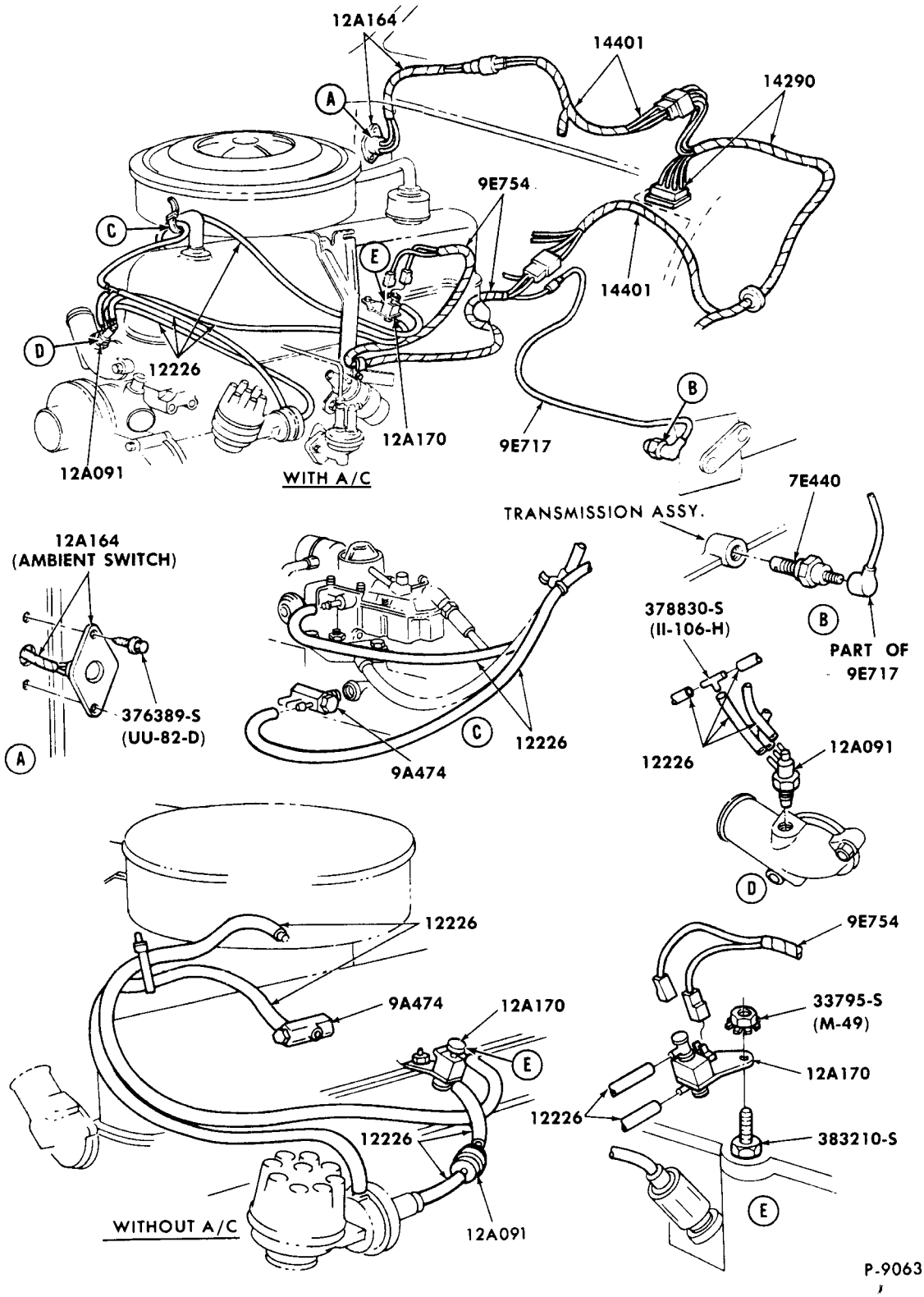

TRANSMISSION REGULATED SPARK CONTROL SYSTEM (T.R.S.)-6 CYL. 250 .I.D. ENGINE
1972 MUSTANG

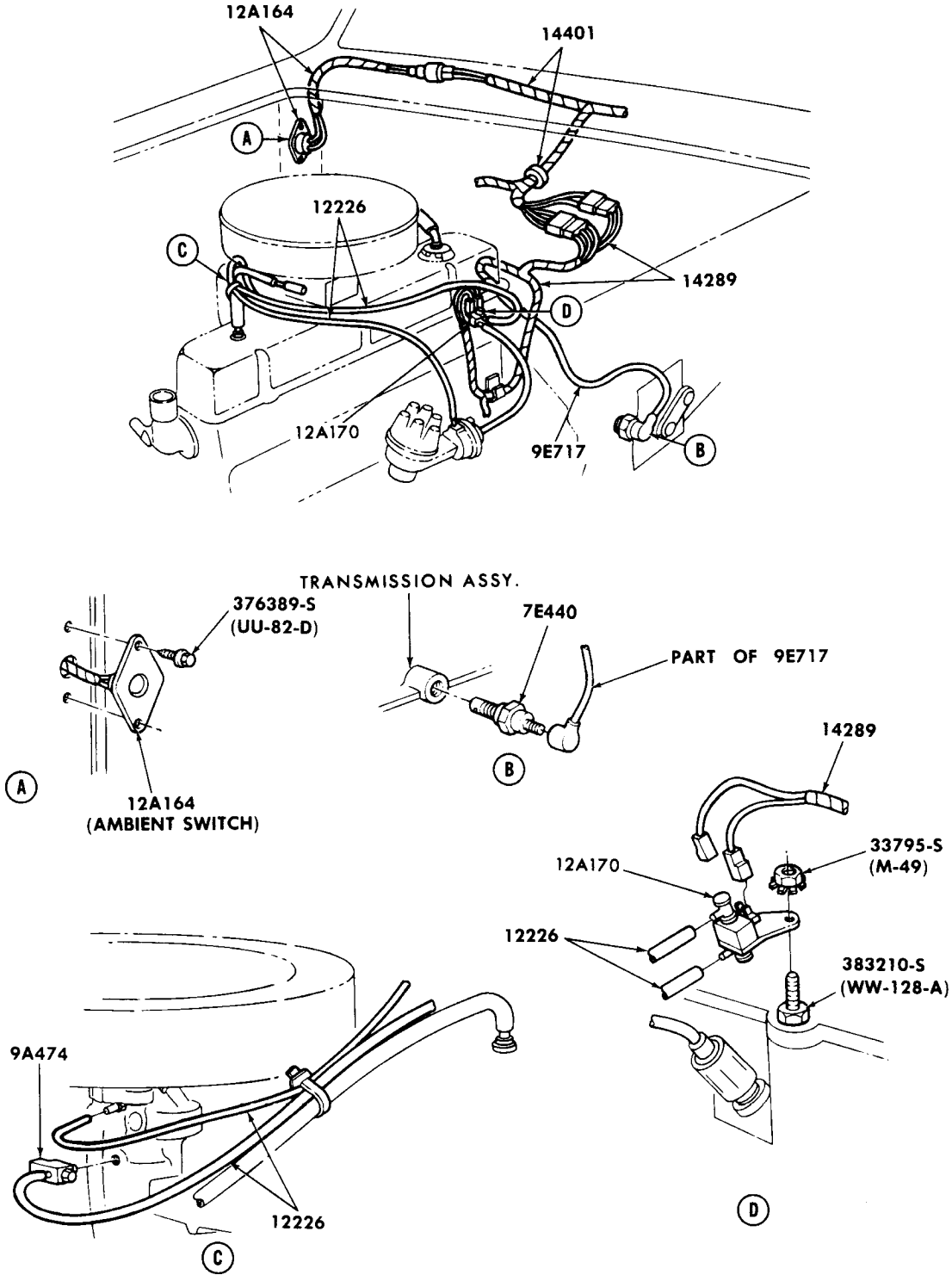

TRANSMISSION REGULATED SPARK CONTROL SYSTEM (T.R.S.)-6 CYL. 240 C.I.D. ENGINE
1972 FORD

COPYRIGHT © 1975 — FORD MOTOR COMPANY — DEARBORN, MICHIGAN

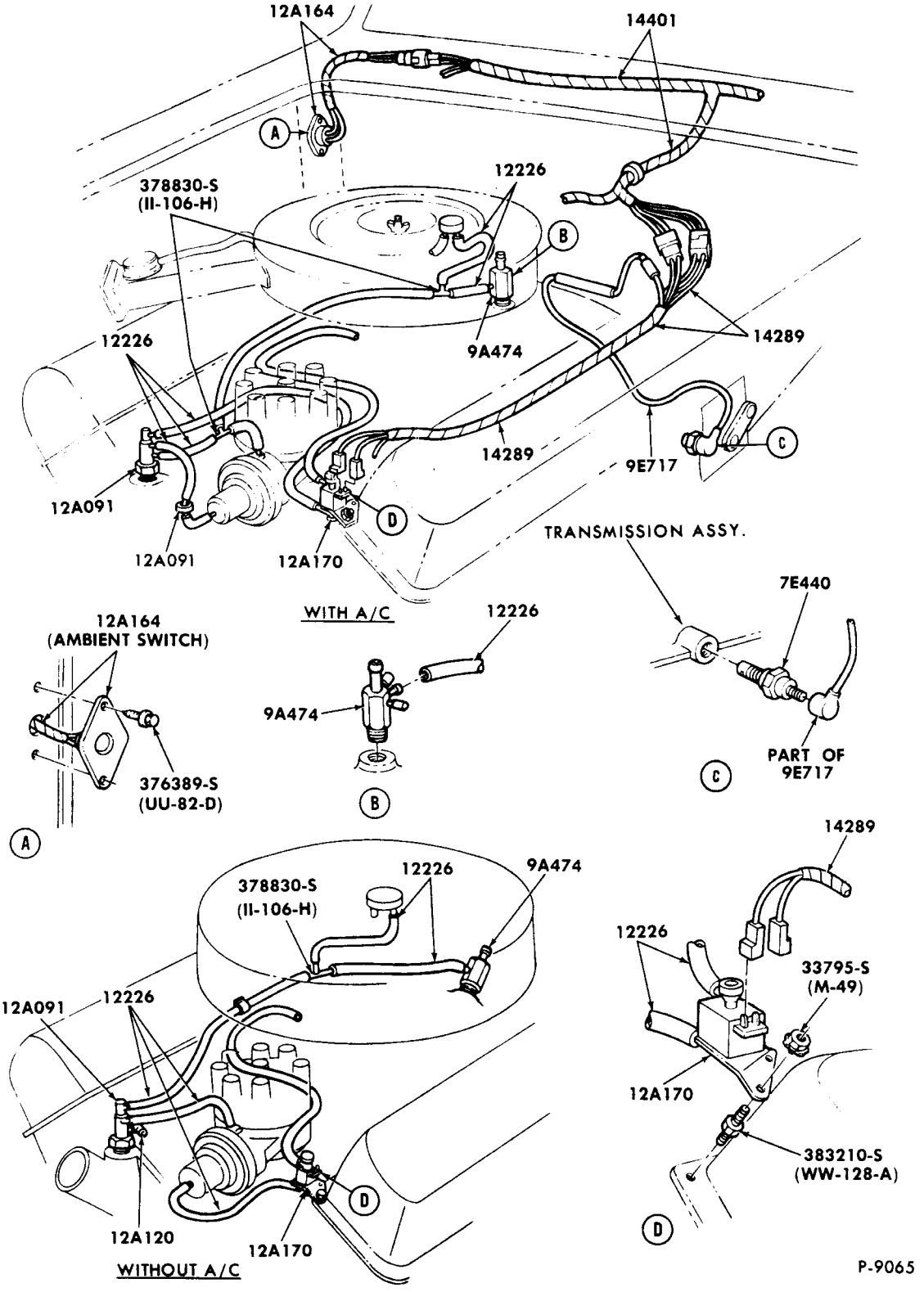

TRANSMISSION REGULATED SPARK CONTROL SYSTEM (T.R.S.)-8 CYL. 302-2V ENGINE
1972 FORD

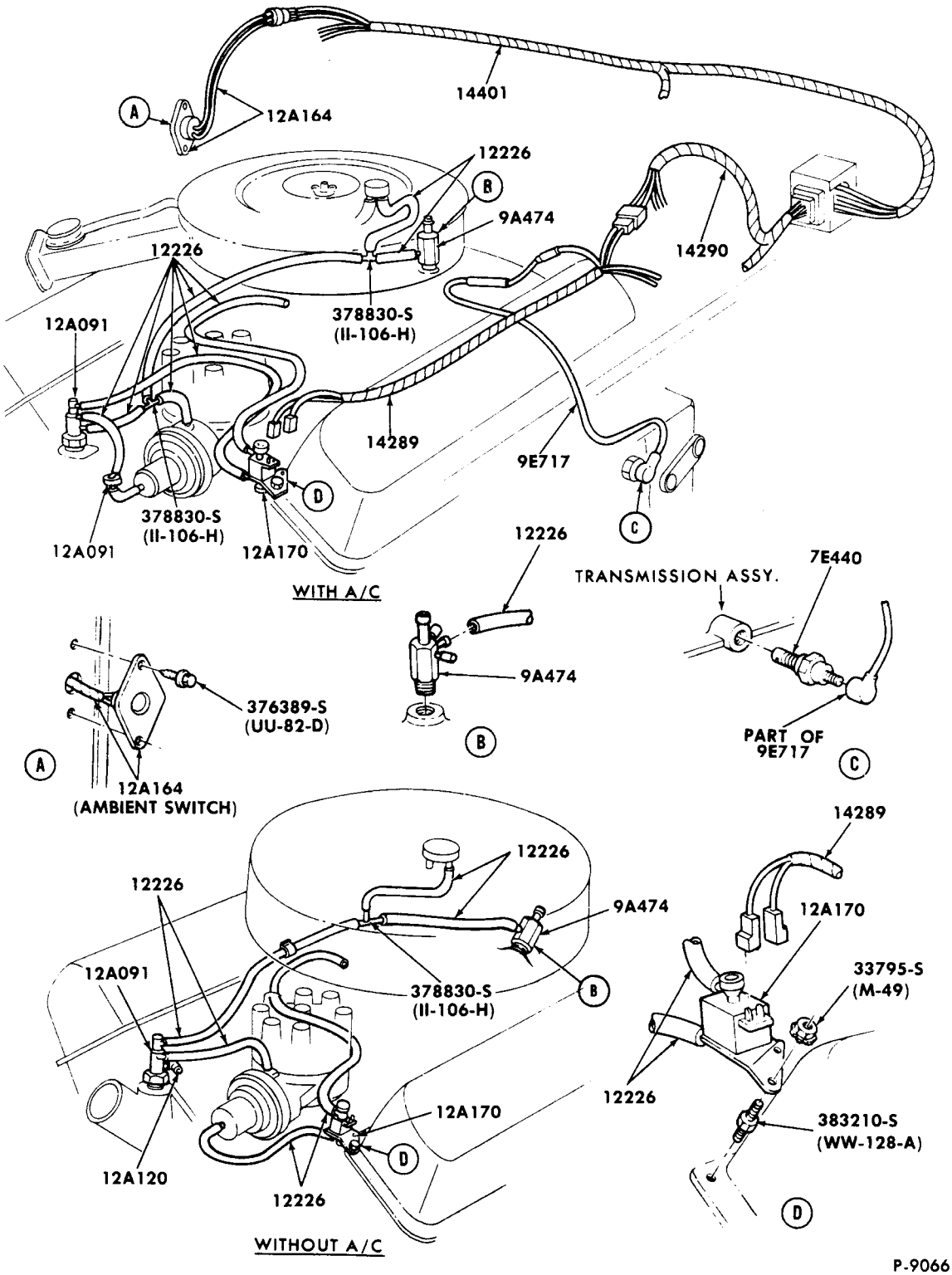

TRANSMISSION REGULATED SPARK CONTROL SYSTEM (T.R.S.)-8 CYL. 302-2V C.I.D. ENGINE
1972 MAVERICK

COPYRIGHT © 1975 — FORD MOTOR COMPANY — DEARBORN, MICHIGAN

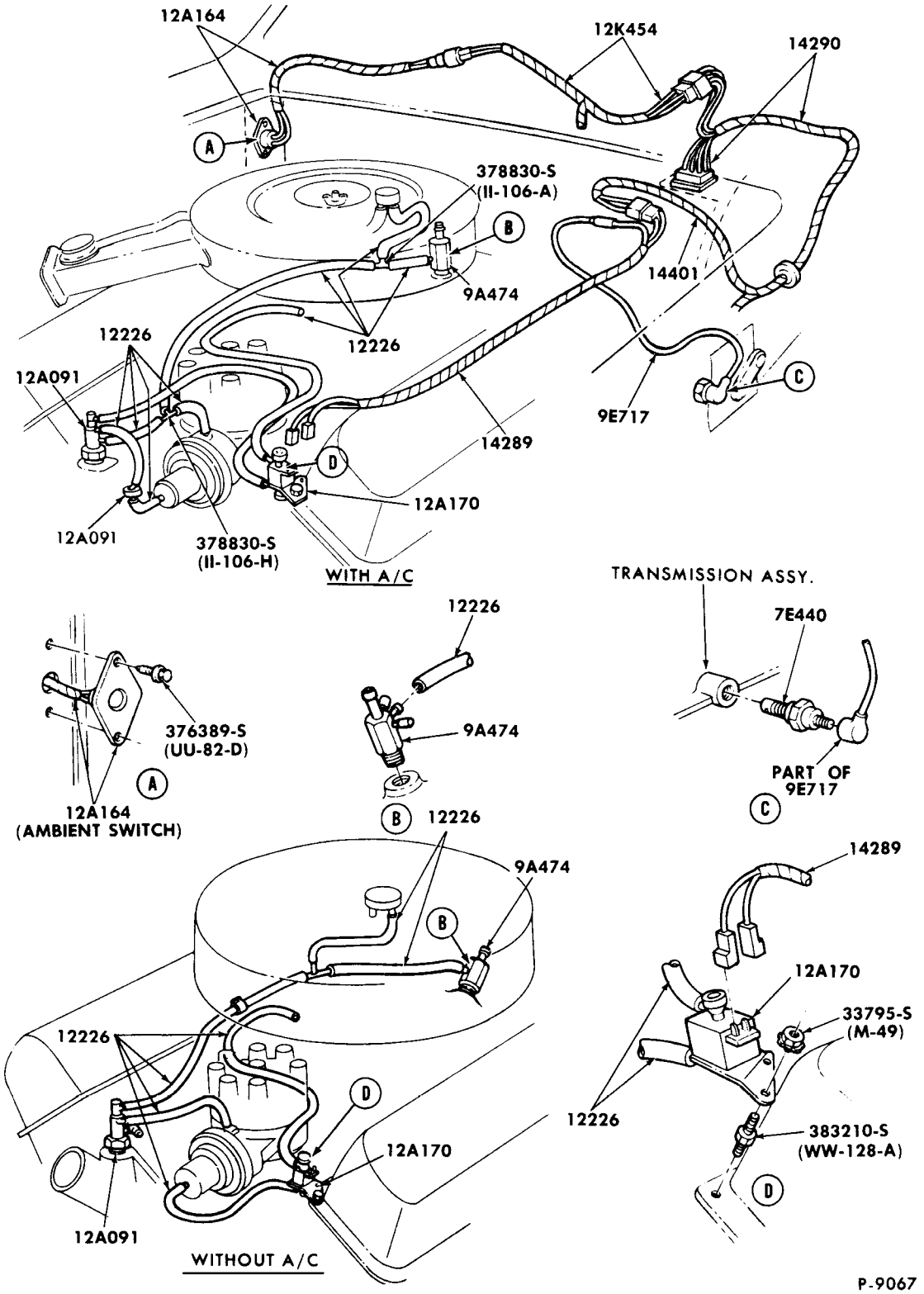

TRANSMISSION REGULATED SPARK CONTROL SYSTEM (T.R.S.)-8 CYL. 302-2V ENGINE
1972 MUSTANG

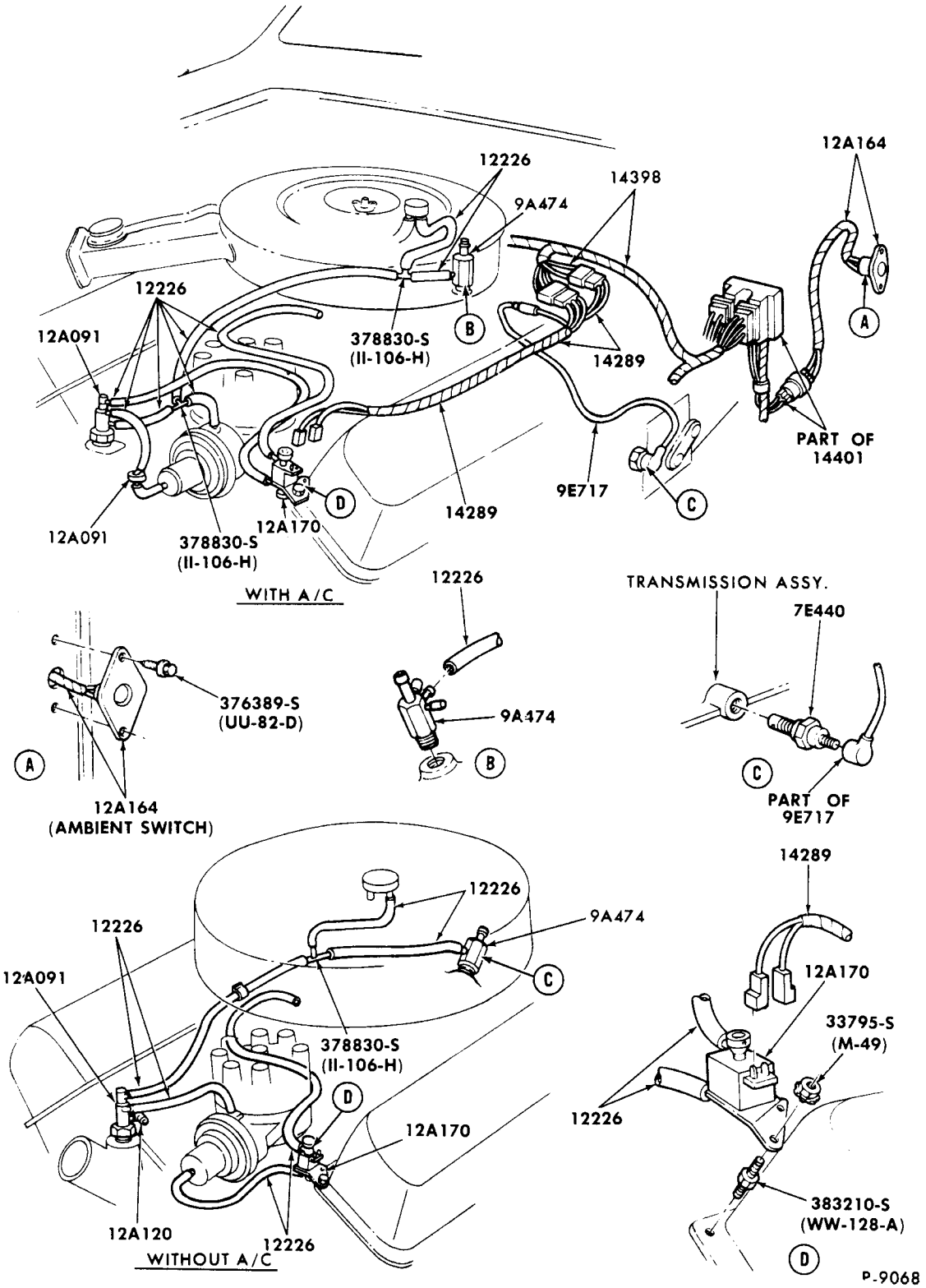

TRANSMISSION REGULATED SPARK CONTROL SYSTEM (T.R.S.)-8 CYL. 302-2V ENGINE
1972 TORINO

COPYRIGHT © 1975 — FORD MOTOR COMPANY — DEARBORN, MICHIGAN

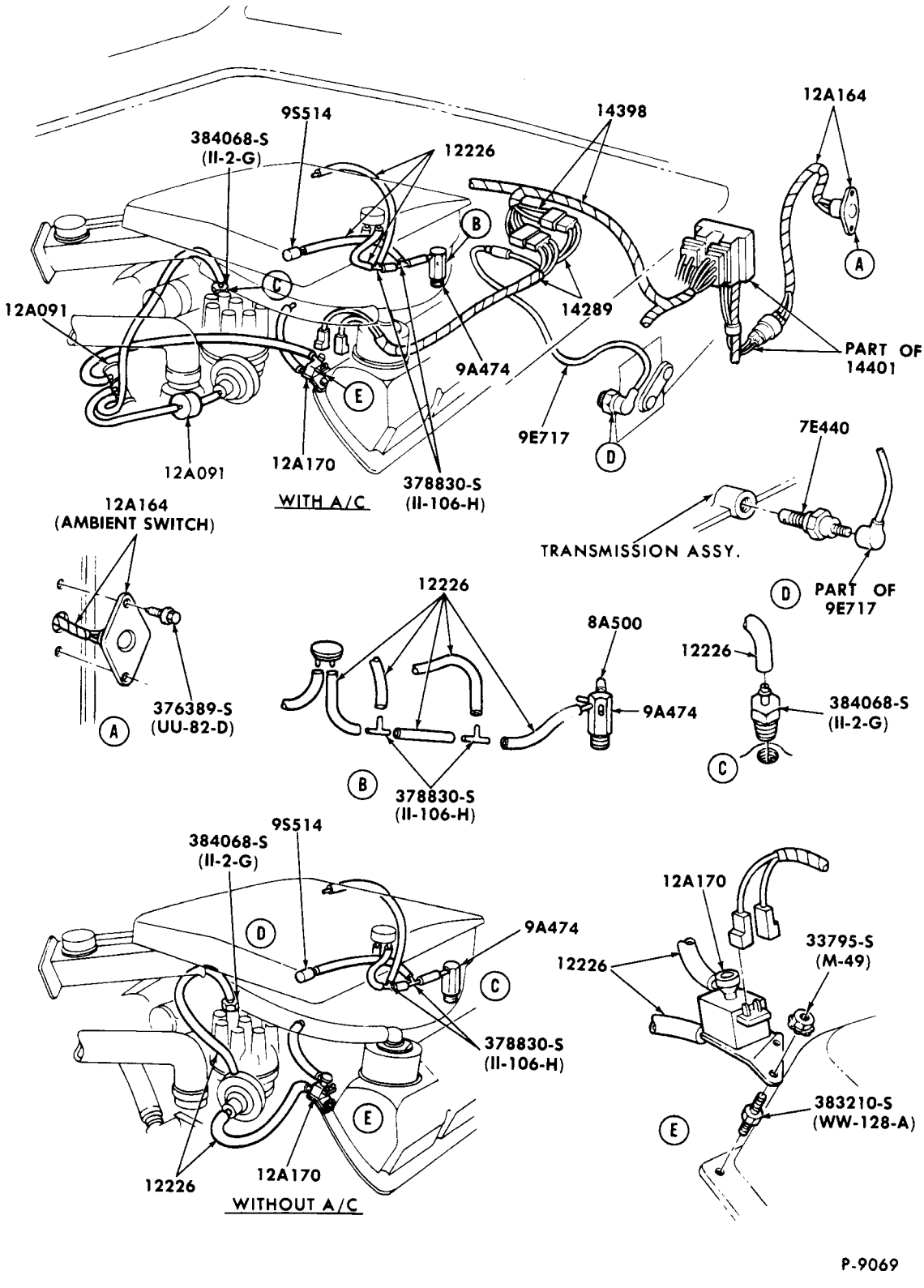

TRANSMISSION REGULATED SPARK CONTROL SYSTEM (T.R.S.)-8 CYL. 351-4V CJ ENGINE
1972 TORINO - WITH RAM AIR HOOD

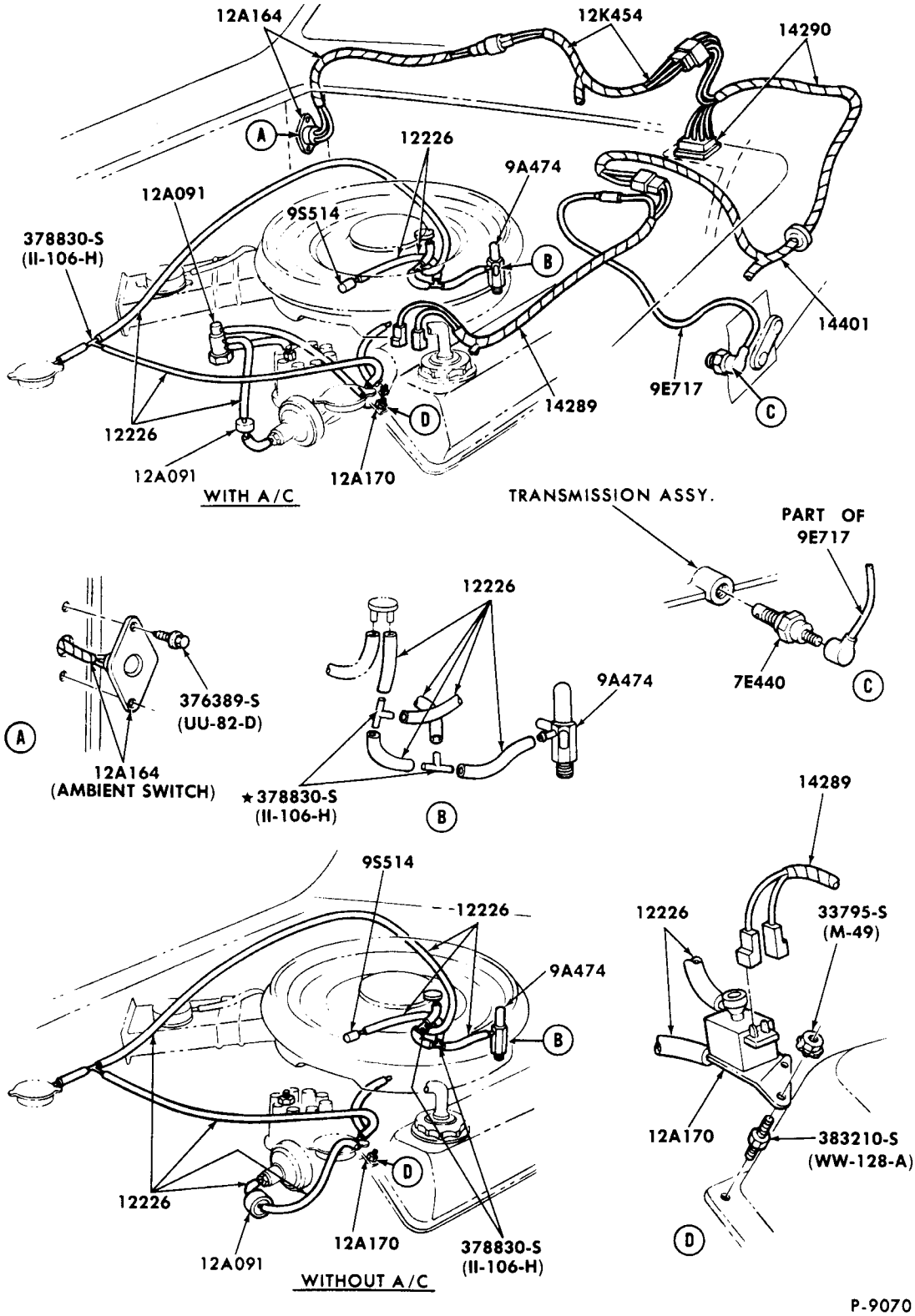

TRANSMISSION REGULATED SPARK CONTROL SYSTEM (T.R.S.)-8 CYL. 351-4V CJ ENGINE
1972 MUSTANG - WITH RAM AIR HOOD

COPYRIGHT © 1975 — FORD MOTOR COMPANY — DEARBORN, MICHIGAN

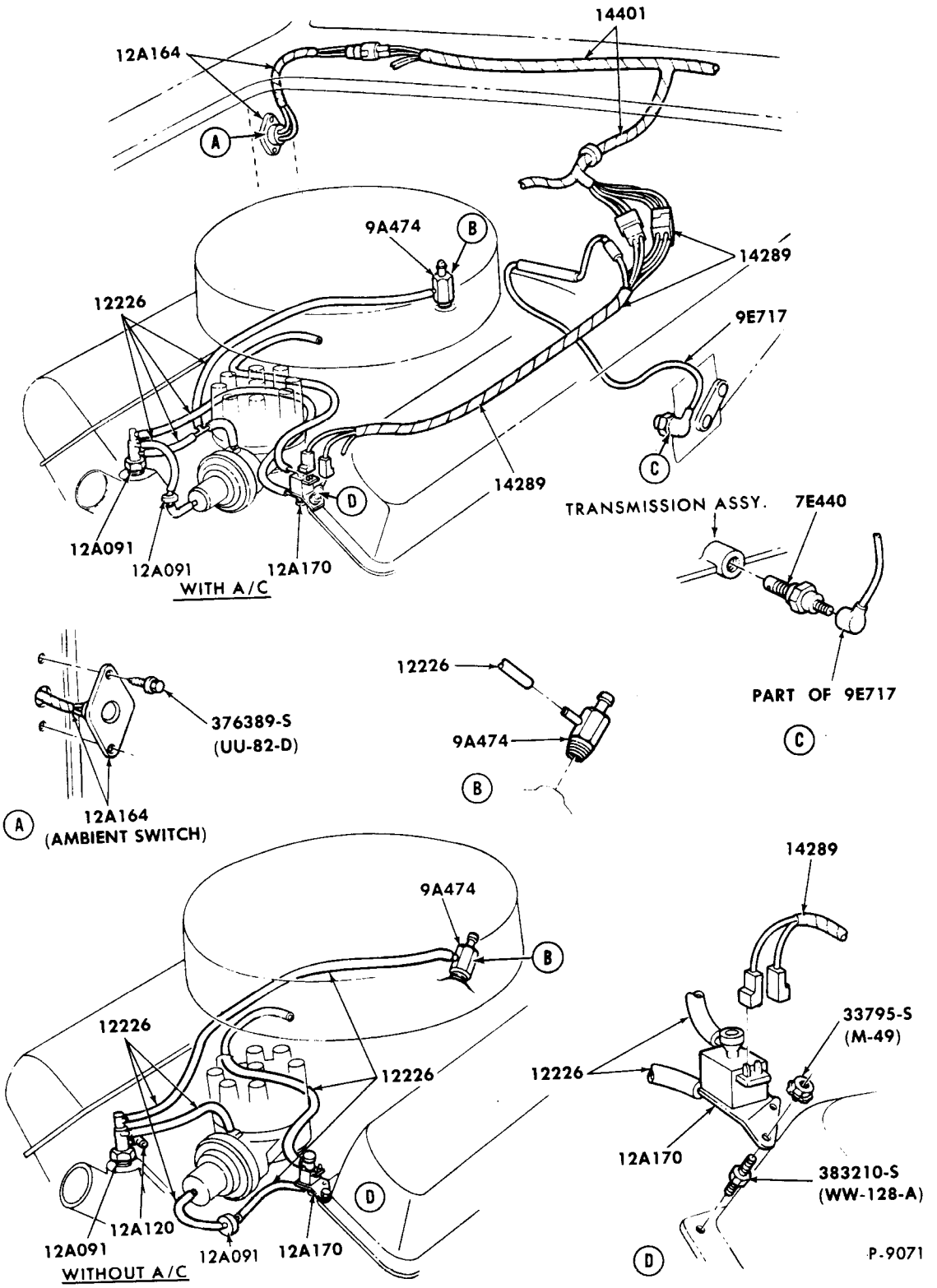

TRANSMISSION REGULATED SPARK CONTROL SYSTEM (T.R.S.)-8 CYL. 351-2V C.I.D. ENGINE

1972 FORD

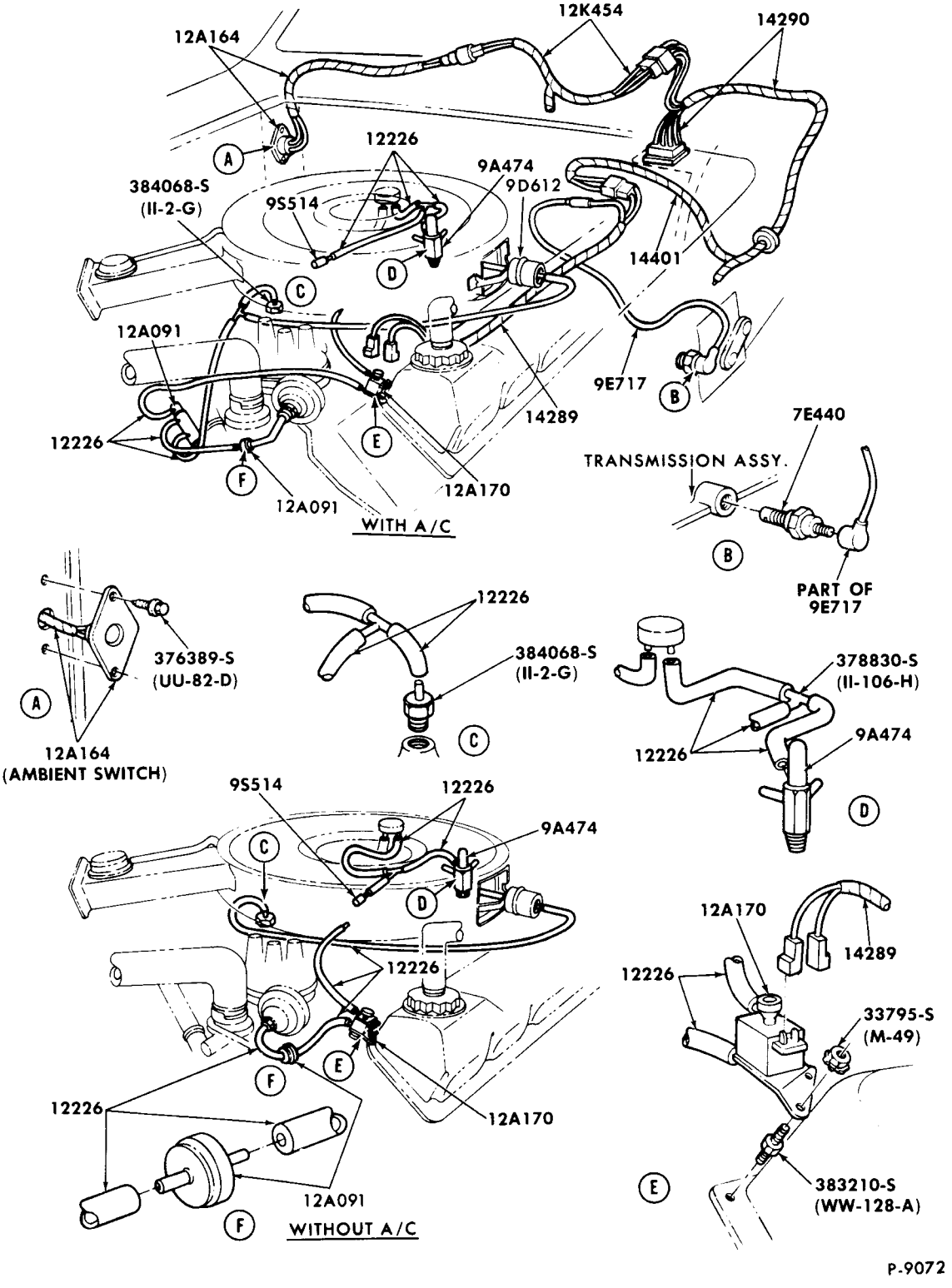

TRANSMISSION REGULATED SPARK CONTROL SYSTEM (T.R.S.)-8 CYL. 351-4V CJ ENGINE
1972 MUSTANG - WITHOUT RAM AIR HOOD

COPYRIGHT © 1975 — FORD MOTOR COMPANY — DEARBORN, MICHIGAN

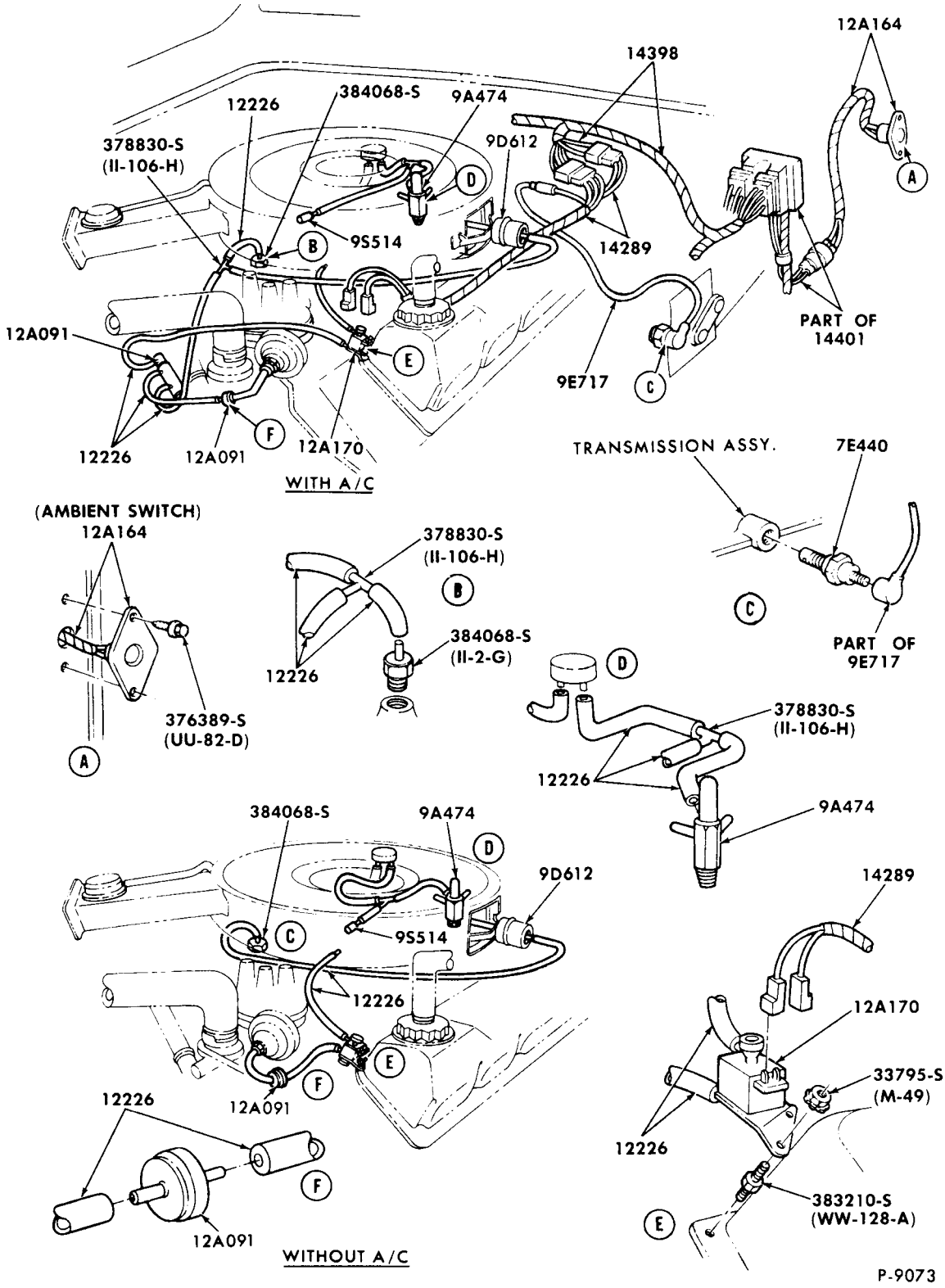

TRANSMISSION REGULATED SPARK CONTROL SYSTEM (T.R.S.)-8 CYL. 351-4V CJ ENGINE
1972 TORINO - WITHOUT RAM AIR HOOD

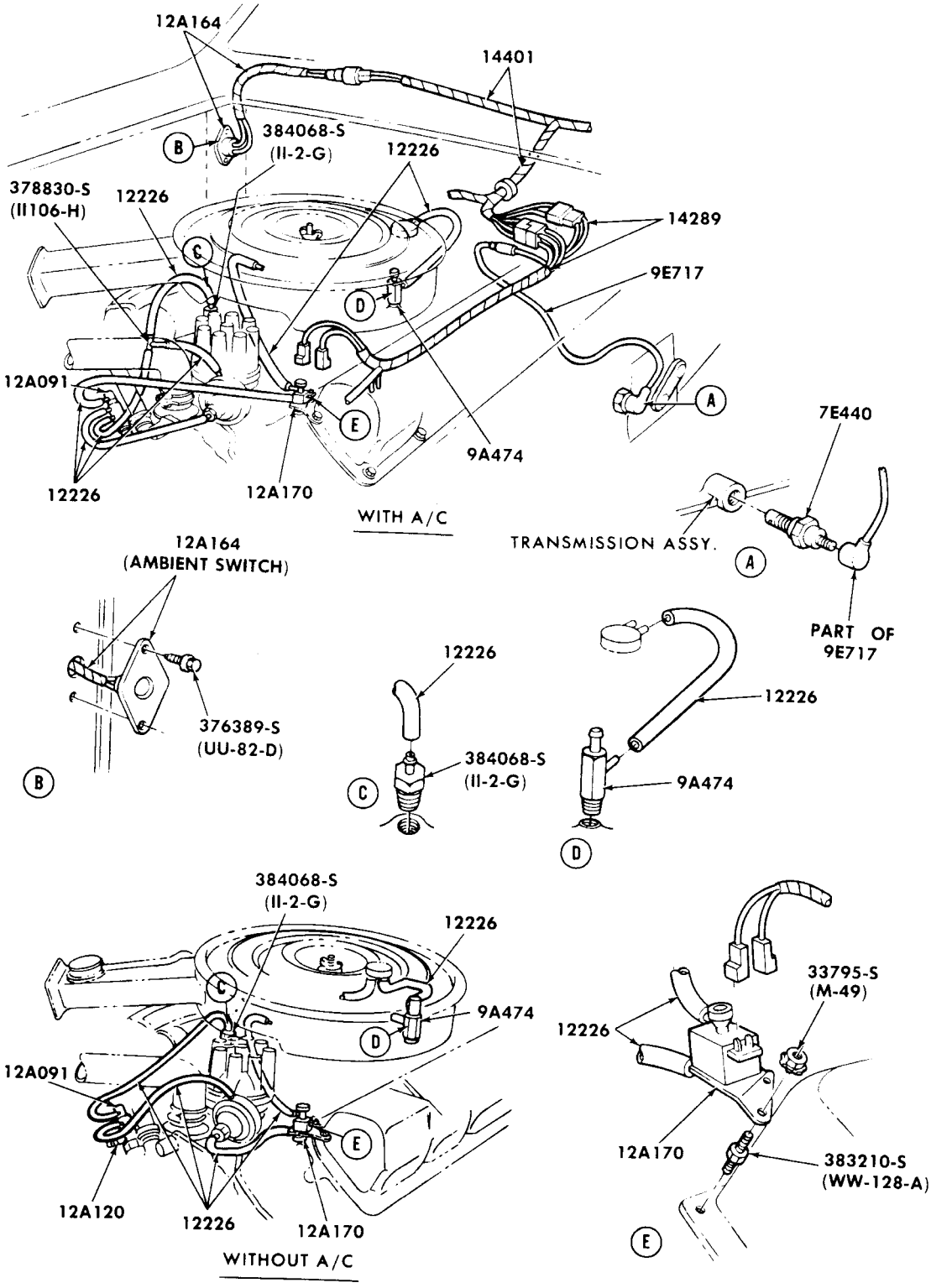

P-9074

TRANSMISSION REGULATED SPARK CONTROL SYSTEM (T.R.S.)-8 CYL. 400-2V C.I.D. ENGINE
1972 FORD

COPYRIGHT © 1975 — FORD MOTOR COMPANY — DEARBORN, MICHIGAN

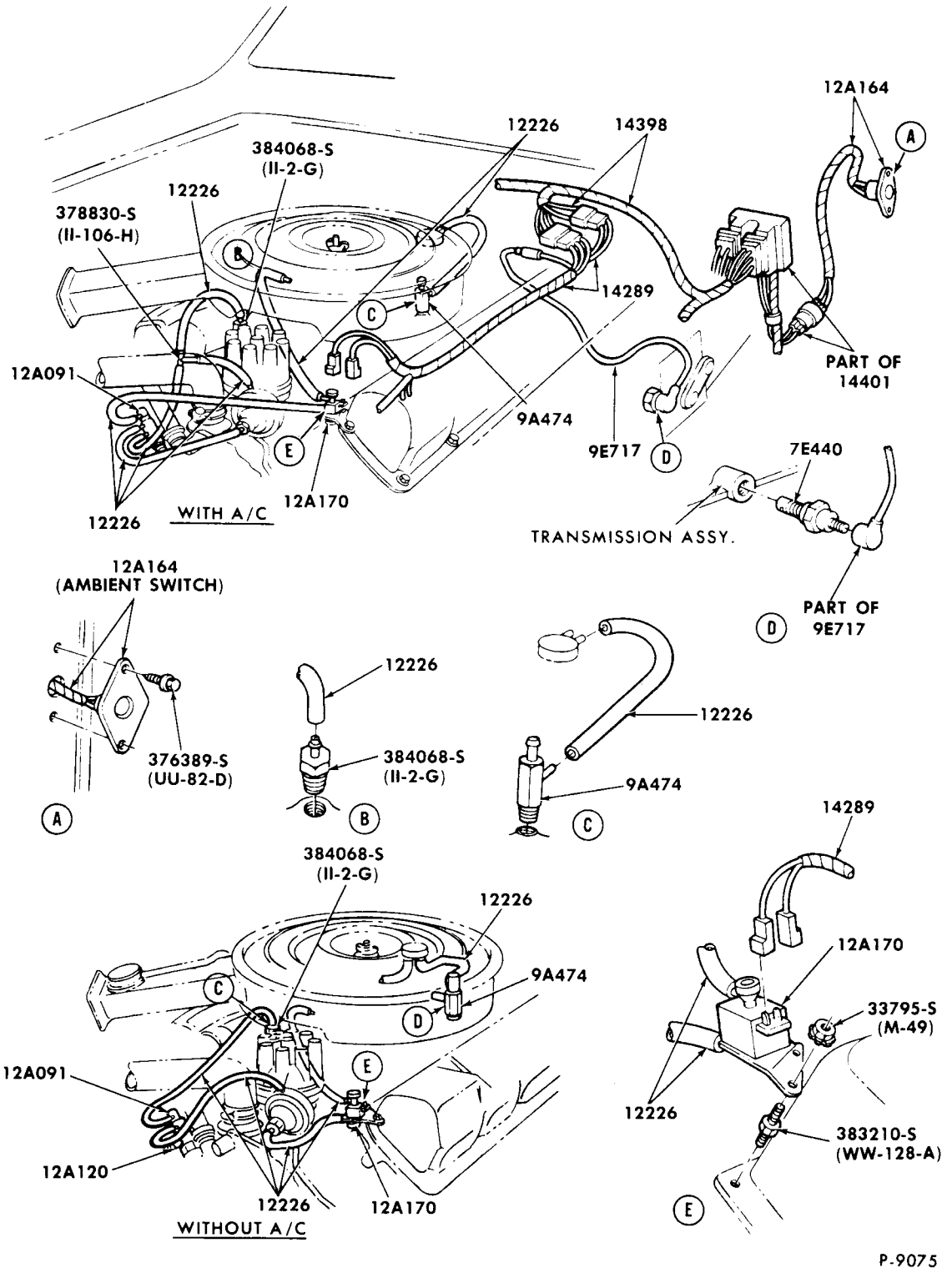

TRANSMISSION REGULATED SPARK CONTROL SYSTEM (T.R.S.)-8 CYL. 351-2V, 400-2V C.I.D. ENGINES
1972 TORINO

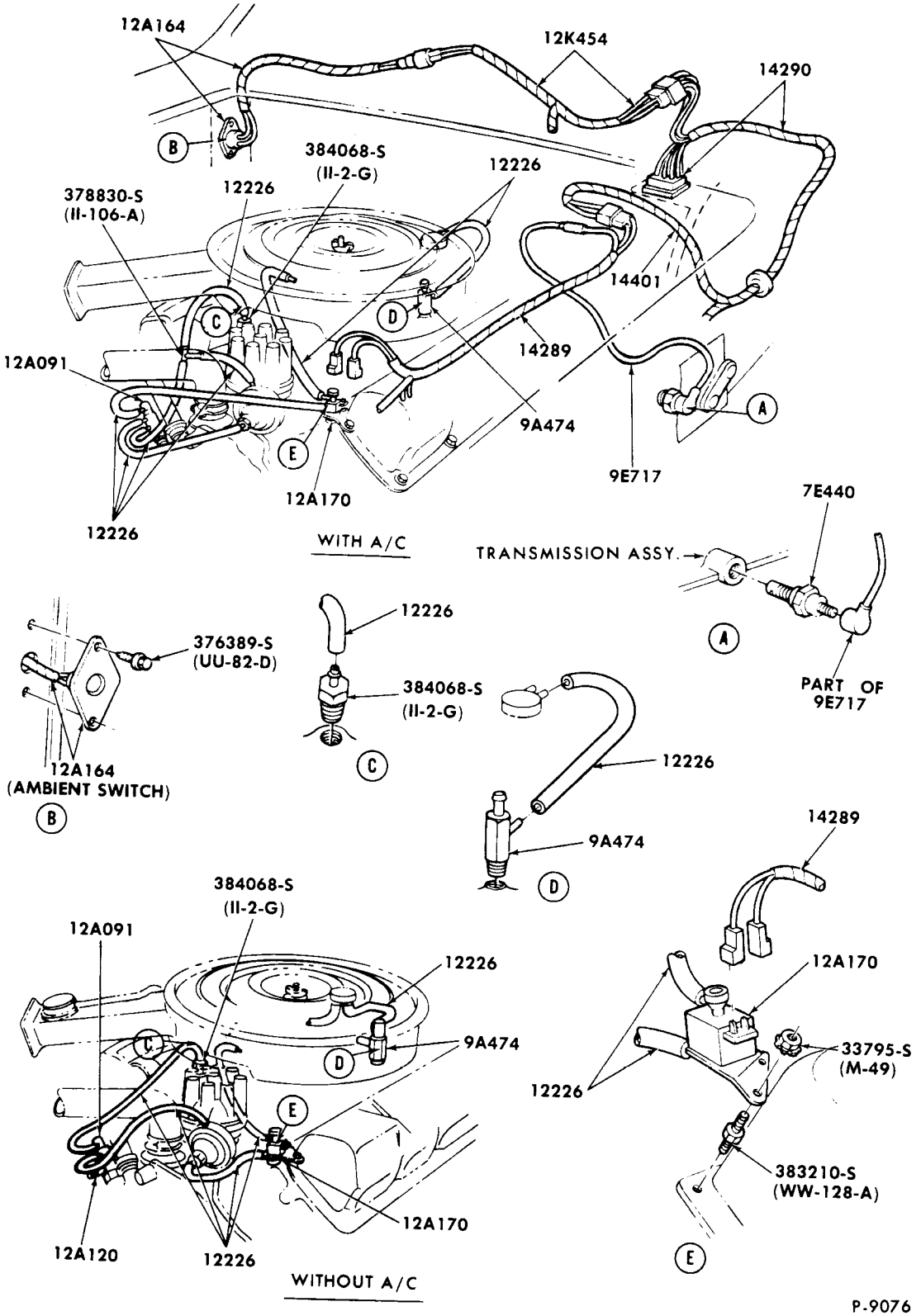

TRANSMISSION REGULATED SPARK CONTROL SYSTEM (T.R.S.)-8 CYL. 351-2V C.I.D. ENGINE
1972 MUSTANG

COPYRIGHT © 1975 — FORD MOTOR COMPANY — DEARBORN, MICHIGAN

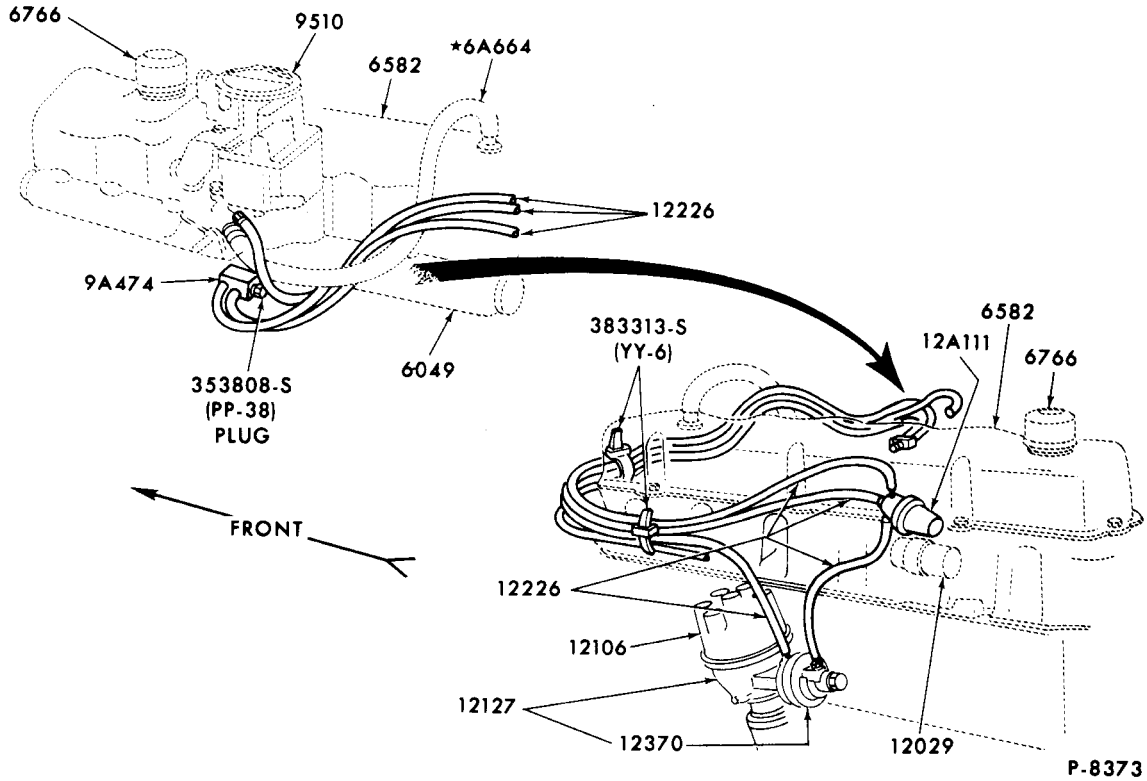

DISTRIBUTOR VACUUM HOSE INSTALLATION-6 CYLINDER 170 C.I.D. ENGINE
1969/72 BRONCO

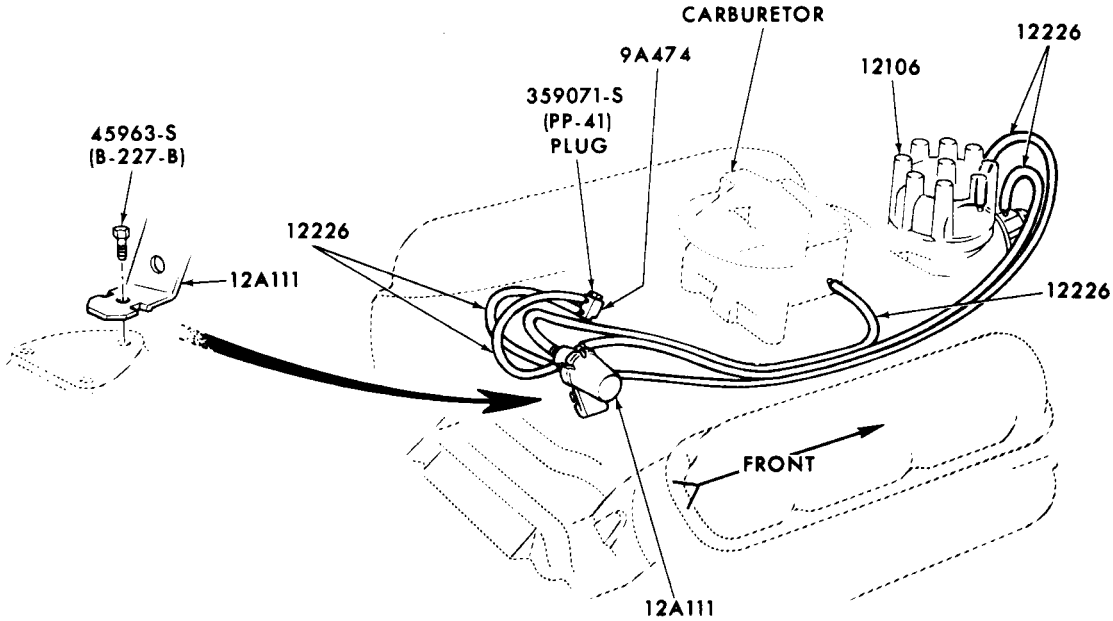

DISTRIBUTOR VACUUM HOSE INSTALLATION-8 CYLINDER 302 ENGINE
1970/72 BRONCO

COPYRIGHT © 1975 — FORD MOTOR COMPANY — DEARBORN, MICHIGAN