# INDEX

## SHEET METAL

# 1965

### A (FORD)

| TITLE | SECTION | PAGE | ILLUS. NO. |
|---|---|---|---|
| 54 | A | 1 | P-4626 |
| 57 | A | 2 | P-4627 |
| 62 | A | 3 | P-4628 |
| 63 | A | 4 | P-4629 |
| 71 | A | 5 | P-4630 |
| 76 | A | 6 | P-4631 |

### B (FAIRLANE)

| TITLE | SECTION | PAGE | ILLUS. NO. |
|---|---|---|---|
| 71 - under body | B | 5 | P-4639 |
| 54, 62, 65 - under body | B | 1 | P-4638 |
| 54 - upper body | B | 2 | P-4634 |
| 62 - upper body | B | 3 | P-4635 |
| 65 - upper body | B | 4 | P-4636 |
| 71 - upper body | B | 6 | P-4637 |

### F (MUSTANG)

| TITLE | SECTION | PAGE | ILLUS. NO. |
|---|---|---|---|
| 63, 65 - under body | F | 1 | P-4486 |
| 76 - under body | F | 4 | P-4487 |
| 65 - upper body | F | 3 | P-4488 |
| 76 - upper body | F | 5 | P-4489 |
| 63 - upper body | F | 2 | P-4640 |

### S (THUNDERBIRD)

| TITLE | SECTION | PAGE | ILLUS. NO. |
|---|---|---|---|
| 63 - under body | S | 1 | P-4642 |
| 76 - under body | S | 4 | P-4644 |
| 63 - upper body | S | 2 | P-4641 |
| 76 - upper body | S | 5 | P-4643 |

### X (FALCON)

| TITLE | SECTION | PAGE | ILLUS. NO. |
|---|---|---|---|
| 54, 59, 62, 63, 66, 71, 78 - under body | X | 1 | P-4653 |
| 76 - under body | X | 9 | P-4654 |
| 54 - upper body | X | 2 | P-4645 |
| 59 - upper body | X | 3 | P-4646 |
| 62 - upper body | X | 4 | P-4647 |
| 63 - upper body | X | 5 | P-4648 |
| 66 - upper body | X | 6 | P-4317 |
| 71 - upper body | X | 7 | P-4650 |
| 76 - upper body | X | 10 | P-4651 |
| 78 - upper body | X | 8 | P-4325 |

# 1966

### A (FORD)

| TITLE | SECTION | PAGE | ILLUS. NO. |
|---|---|---|---|
| 54 | A | 7 | P-5032 |
| 57 | A | 8 | P-5033 |
| 62 | A | 9 | P-5034 |
| 63 | A | 10 | P-5035 |
| 71 | A | 11 | P-5036 |
| 76 | A | 12 | P-5037 |

### B (FAIRLANE)

| TITLE | SECTION | PAGE | ILLUS. NO. |
|---|---|---|---|
| 54, 62, 63 - under body | B | 7 | P-5023 |
| 71 - under body | B | 13 | P-5024 |
| 76 - under body | B | 15 | P-5025 |
| 54 - upper body | B | 8 | P-5018 |
| 62 - upper body | B | 9 | P-5019 |
| 63 - upper body | B | 10 | P-5020 |
| 71 - upper body | B | 14 | P-5021 |
| 76 - upper body | B | 16 | P-5022 |

### F (MUSTANG)

| TITLE | SECTION | PAGE | ILLUS. NO. |
|---|---|---|---|
| 63, 65 - under body | F | 1 | P-4486 |
| 76 - under body | F | 4 | P-4487 |
| 65 - upper body | F | 3 | P-4488 |
| 76 - upper body | F | 5 | P-4489 |
| 63 - upper body | F | 2 | P-4640 |

### S (THUNDERBIRD)

| TITLE | SECTION | PAGE | ILLUS. NO. |
|---|---|---|---|
| 63 - under body | S | 1 | P-4642 |
| 76 - under body | S | 4 | P-4644 |
| 63A, B - upper body | S | 2 | P-4641 |
| 63C, D - upper body | S | 3 | P-5017 |
| 76 - upper body | S | 5 | P-4643 |

### U (BRONCO)

| TITLE | SECTION | PAGE | ILLUS. NO. |
|---|---|---|---|
| 96, 97, 98 | U | 1 | P-4963 |
| 97 - roof | U | 2 | P-4969 |
| 98 - roof | U | 2 | P-4968 |

### X (FALCON)

| TITLE | SECTION | PAGE | ILLUS. NO. |
|---|---|---|---|
| 54, 62 - under body | X | 11 | P-5142 |
| 66 - under body | X | 14 | P-5031 |
| 71 - under body | X | 16 | P-5148 |
| 54 - upper body | X | 12 | P-5026 |
| 62 - upper body | X | 13 | P-5027 |
| 66 - upper body | X | 15 | P-5028 |
| 71 - upper body | X | 17 | P-5141 |


COPYRIGHT © 1975 — FORD MOTOR COMPANY — DEARBORN, MICHIGAN

# INDEX

SHEET METAL - continued

# 1967

## A (FORD)

| TITLE | SECTION | PAGE | ILLUS. NO. |
|---|---|---|---|
| 54 | A | 13 | P-5486 |
| 57 | A | 14 | P-5487 |
| 62 | A | 15 | P-5488 |
| 63 | A | 16 | P-5489 |
| 71 | A | 17 | P-5490 |
| 76 | A | 18 | P-5491 |

## B (FAIRLANE)

| TITLE | SECTION | PAGE | ILLUS. NO. |
|---|---|---|---|
| 54, 62, 63 - under body | B | 7 | P-5023 |
| 66 - under body | B | 11 | P-5031 |
| 71 - under body | B | 13 | P-5024 |
| 76 - under body | B | 15 | P-5025 |
| 54 - upper body | B | 8 | P-5018 |
| 62 - upper body | B | 9 | P-5019 |
| 63 - upper body | B | 10 | P-5020 |
| 66 - upper body | B | 12 | P-5028 |
| 71 - upper body | B | 14 | P-5021 |
| 76 - upper body | B | 16 | P-5022 |

## F (MUSTANG)

| TITLE | SECTION | PAGE | ILLUS. NO. |
|---|---|---|---|
| 63, 65 - under body | F | 6 | P-5466 |
| 76 - under body | F | 9 | P-5467 |
| 63 - upper body | F | 7 | P-5468 |
| 65 - upper body | F | 8 | P-5469 |
| 76 - upper body | F | 10 | P-5470 |

## S (THUNDERBIRD)

| TITLE | SECTION | PAGE | ILLUS. NO. |
|---|---|---|---|
| 57, 65 - under body | S | 6 | P-5354 |
| 57 - upper body | S | 9 | P-5356 |
| 65 - upper body | S | 8 | P-5357 |

## U (BRONCO)

| TITLE | SECTION | PAGE | ILLUS. NO. |
|---|---|---|---|
| 96, 97, 98 | U | 1 | P-4963 |
| 97 - roof | U | 2 | P-4969 |
| 98 - roof | U | 2 | P-4968 |

## X (FALCON)

| TITLE | SECTION | PAGE | ILLUS. NO. |
|---|---|---|---|
| 54, 62 - under body | X | 11 | P-5142 |
| 71 - under body | X | 16 | P-5148 |
| 54 - upper body | X | 12 | P-5026 |
| 62 - upper body | X | 13 | P-5027 |
| 71 - upper body | X | 17 | P-5141 |

# 1968

## A (FORD)

| TITLE | SECTION | PAGE | ILLUS. NO. |
|---|---|---|---|
| 54 | A | 19 | P-6050 |
| 57 | A | 20 | P-6051 |
| 62 | A | 21 | P-6052 |
| 63 | A | 22 | P-6053 |
| 65 | A | 23 | P-6054 |
| 71 | A | 24 | P-6055 |
| 76 | A | 25 | P-6056 |

## B (FAIRLANE/TORINO)

| TITLE | SECTION | PAGE | ILLUS. NO. |
|---|---|---|---|
| 54, 63, 65 - under body | B | 17 | P-6063 |
| 66 - under body | B | 21 | P-6064 |
| 71 - under body | B | 23 | P-6065 |
| 76 - under body | B | 25 | P-6066 |
| 54 - upper body | B | 18 | P-6057 |
| 63 - upper body | B | 19 | P-6058 |
| 65 - upper body | B | 20 | P-6059 |
| 66 - upper body | B | 22 | P-6060 |
| 71 - upper body | B | 24 | P-6061 |
| 76 - upper body | B | 26 | P-6062 |

## F (MUSTANG)

| TITLE | SECTION | PAGE | ILLUS. NO. |
|---|---|---|---|
| 63, 65 - under body | F | 6 | P-5466 |
| 76 - under body | F | 9 | P-5467 |
| 63 - upper body | F | 7 | P-5468 |
| 65 - upper body | F | 8 | P-5469 |
| 76 - upper body | F | 10 | P-5470 |

## S (THUNDERBIRD)

| TITLE | SECTION | PAGE | ILLUS. NO. |
|---|---|---|---|
| 57, 65 - under body | S | 9 | P-6069 |
| 57 - upper body | S | 10 | P-6068 |
| 65 - upper body | S | 11 | P-6067 |

## U (BRONCO)

| TITLE | SECTION | PAGE | ILLUS. NO. |
|---|---|---|---|
| 96, 97, 98 | U | 1 | P-4963 |
| 97 - roof | U | 2 | P-4969 |
| 98 - roof | U | 2 | P-4968 |

## X (FALCON)

| TITLE | SECTION | PAGE | ILLUS. NO. |
|---|---|---|---|
| 54, 62 - under body | X | 18 | P-6073 |
| 71 - under body | X | 21 | P-6074 |
| 54 - upper body | X | 19 | P-6070 |
| 62 - upper body | X | 20 | P-6071 |
| 71 - upper body | X | 22 | P-6072 |

# INDEX

## SHEET METAL - continued

# 1969

### A (FORD)


| TITLE | SECTION | PAGE | ILLUS. NO. |
|---|---|---|---|
| 54 | A | 26 | P-6697 |
| 57 | A | 27 | P-6698 |
| 62 | A | 28 | P-6702 |
| 63 | A | 29 | P-6703 |
| 65 | A | 30 | P-6704 |
| 71 | A | 31 | P-6705 |
| 76 | A | 32 | P-6706 |


### B (FAIRLANE/TORINO)


| TITLE | SECTION | PAGE | ILLUS. NO. |
|---|---|---|---|
| 54, 63, 65 - under body | B | 17 | P-6063 |
| 66 - under body | B | 21 | P-6064 |
| 71 - under body | B | 23 | P-6065 |
| 76 - under body | B | 25 | P-6066 |
| 54 - upper body | B | 18 | P-6057 |
| 63 - upper body | B | 19 | P-6058 |
| 65 - upper body | B | 20 | P-6059 |
| 66 - upper body | B | 22 | P-6060 |
| 71 - upper body | B | 24 | P-6061 |
| 76 - upper body | B | 26 | P-6062 |


### F (MUSTANG)


| TITLE | SECTION | PAGE | ILLUS. NO. |
|---|---|---|---|
| 63, 65 - under body | F | 6 | P-5466 |
| 65 - under body | F | 12 | P-7271 |
| 76 - under body | F | 13 | P-7272 |
| 63 - upper body | F | 11 | P-6716 |
| 65 - upper body | F | 14 | P-7273 |
| 76 - upper body | F | 15 | P-7275 |


### S (THUNDERBIRD)


| TITLE | SECTION | PAGE | ILLUS. NO. |
|---|---|---|---|
| 57, 65 - under body | S | 9 | P-6069 |
| 57 - upper body | S | 10 | P-6068 |
| 65 - upper body | S | 11 | P-6067 |


### U (BRONCO)


| TITLE | SECTION | PAGE | ILLUS. NO. |
|---|---|---|---|
| 97, 98 | U | 1 | P-4963 |
| 97 - roof | U | 2 | P-4969 |
| 98 - roof | U | 2 | P-4968 |


### X (FALCON)


| TITLE | SECTION | PAGE | ILLUS. NO. |
|---|---|---|---|
| 54, 62 - under body | X | 18 | P-6073 |
| 71 - under body | X | 21 | P-6074 |
| 54 - upper body | X | 19 | P-6070 |
| 62 - upper body | X | 20 | P-6071 |
| 71 - upper body | X | 22 | P-6072 |


# 1970

### A (FORD)


| TITLE | SECTION | PAGE | ILLUS. NO. |
|---|---|---|---|
| 54 | A | 26 | P-6697 |
| 57 | A | 27 | P-6698 |
| 63 | A | 29 | P-6703 |
| 65 | A | 30 | P-6704 |
| 71 | A | 31 | P-6705 |
| 76 | A | 32 | P-6706 |


### B (FAIRLANE/TORINO)

#### B (FALCON) - FROM 1/2/70


| TITLE | SECTION | PAGE | ILLUS. NO. |
|---|---|---|---|
| 54, 57, 62, 63, 65 - under body | B | 27 | P-7072 |
| 66 - under body | B | 28 | P-7074 |
| 71 - under body | B | 29 | P-7073 |
| 76 - under body | B | 30 | P-7075 |
| 54 - upper body | B | 31 | P-7081 |
| 57 - upper body | B | 32 | P-7082 |
| 62 - upper body | B | 38 | P-7083 |
| 63 - upper body | B | 33 | P-7084 |
| 65 - upper body | B | 34 | P-7085 |
| 66 - upper body | B | 35 | P-7086 |
| 71 - upper body | B | 36 | P-7087 |
| 76 - upper body | B | 37 | P-7088 |


### F (MUSTANG)


| TITLE | SECTION | PAGE | ILLUS. NO. |
|---|---|---|---|
| 63 - under body | F | 6 | P-5466 |
| 65 - under body | F | 12 | P-7271 |
| 76 - under body | F | 13 | P-7272 |
| 63 - upper body | F | 11 | P-6716 |
| 65 - upper body | F | 14 | P-7273 |
| 76 - upper body | F | 15 | P-7275 |


### P (MAVERICK)


| TITLE | SECTION | PAGE | ILLUS. NO. |
|---|---|---|---|
| 62 - under body | P | 1 | P-6874 |
| 62 - upper body | P | 2 | P-6911 |


### S (THUNDERBIRD)


| TITLE | SECTION | PAGE | ILLUS. NO. |
|---|---|---|---|
| 57, 65 - under body | S | 12 | P-7034 |
| 57 - upper body | S | 13 | P-7035 |
| 65 - upper body | S | 14 | P-7036 |


### U (BRONCO)


| TITLE | SECTION | PAGE | ILLUS. NO. |
|---|---|---|---|
| 97, 98 | U | 1 | P-4963 |
| 97 - roof | U | 2 | P-4969 |
| 98 - roof | U | 2 | P-4968 |


### X (FALCON) - BEFORE 1/2/70

FOR UNITS BUILT FROM 1/2/70 REFER TO B (FALCON)


| TITLE | SECTION | PAGE | ILLUS. NO. |
|---|---|---|---|
| 54, 62 - under body | X | 18 | P-6073 |
| 71 - under body | X | 21 | P-6074 |
| 54 - upper body | X | 19 | P-6070 |
| 62 - upper body | X | 20 | P-6071 |
| 71 - upper body | X | 22 | P-6072 |




COPYRIGHT © 1975 — FORD MOTOR COMPANY — DEARBORN, MICHIGAN

FINAL ISSUE

# INDEX

## SHEET METAL - continued

# 1971

### A (FORD)

| TITLE | SECTION | PAGE | ILLUS. NO. |
|---|---|---|---|
| 53,54,57,65,76 - under body | A | 33 | P-7989 |
| 71 - under body | A | 34 | P-7990 |
| 53 - upper body | A | 35 | P-7993 |
| 54 - upper body | A | 36 | P-7994 |
| 57 - upper body | A | 37 | P-7995 |
| 65 - upper body | A | 38 | P-7996 |
| 71 - upper body | A | 39 | P-7991 |
| 76 - upper body | A | 40 | P-7992 |

### B (TORINO)

| TITLE | SECTION | PAGE | ILLUS. NO. |
|---|---|---|---|
| 54,57,63,65 - under body | B | 27 | P-7072 |
| 66 - under body | B | 28 | P-7074 |
| 71 - under body | B | 29 | P-7073 |
| 76 - under body | B | 30 | P-7075 |
| 54 - upper body | B | 31 | P-7081 |
| 57 - upper body | B | 32 | P-7082 |
| 63 - upper body | B | 33 | P-7084 |
| 65 - upper body | B | 34 | P-7085 |
| 66 - upper body | B | 35 | P-7086 |
| 71 - upper body | B | 36 | P-7087 |
| 76 - upper body | B | 37 | P-7088 |

### F (MUSTANG)

| TITLE | SECTION | PAGE | ILLUS. NO. |
|---|---|---|---|
| 63,65 - under body | F | 16 | P-7877 |
| 76 - under body | F | 17 | P-7878 |
| 63 - upper body | F | 18 | P-7879 |
| 65 - upper body | F | 19 | P-7880 |
| 76 - upper body | F | 20 | P-7882 |

### L (PINTO)

| TITLE | SECTION | PAGE | ILLUS. NO. |
|---|---|---|---|
| 62 - under body | L | 1 | P-7955 |
| 62 - upper body | L | 2 | P-7956 |
| 64 - upper body | L | 3 | P-8274 |

### P (MAVERICK)

| TITLE | SECTION | PAGE | ILLUS. NO. |
|---|---|---|---|
| 54,62 - under body | P | 1 | P-6874 |
| 54 - upper body | P | 3 | P-7958 |
| 62 - upper body | P | 2 | P-6911 |

### S (THUNDERBIRD)

| TITLE | SECTION | PAGE | ILLUS. NO. |
|---|---|---|---|
| 57,65 - under body | S | 12 | P-7034 |
| 57 - upper body | S | 13 | P-7035 |
| 65 - upper body | S | 14 | P-7036 |

### U (BRONCO)

| TITLE | SECTION | PAGE | ILLUS. NO. |
|---|---|---|---|
| 97,98 | U | 1 | P-4963 |
| 97 - roof | U | 2 | P-4969 |
| 98 - roof | U | 2 | P-4968 |

# 1972

### A (FORD)

| TITLE | SECTION | PAGE | ILLUS. NO. |
|---|---|---|---|
| 53,54,57,65,76 - under body | A | 33 | P-7989 |
| 71 - under body | A | 34 | P-7990 |
| 53 - upper body | A | 35 | P-7993 |
| 54 - upper body | A | 36 | P-7994 |
| 57 - upper body | A | 37 | P-7995 |
| 65 - upper body | A | 38 | P-7996 |
| 71 - upper body | A | 39 | P-7991 |
| 76 - upper body | A | 40 | P-7992 |

### B (TORINO)

| TITLE | SECTION | PAGE | ILLUS. NO. |
|---|---|---|---|
| 53,63,65 - under body | B | 39 | P-8642 |
| 71 - under body | B | 40 | P-8643 |
| 97 - under body | B | 41 | P-8644 |
| 53 - upper body | B | 42 | P-8645 |
| 63 - upper body | B | 43 | P-8646 |
| 65 - upper body | B | 44 | P-8647 |
| 71 - upper body | B | 45 | P-8648 |
| 97 - upper body | B | 46 | P-8649 |

### F (MUSTANG)

| TITLE | SECTION | PAGE | ILLUS. NO. |
|---|---|---|---|
| 63,65 - under body | F | 16 | P-7877 |
| 76 - under body | F | 17 | P-7878 |
| 63 - upper body | F | 18 | P-7879 |
| 65 - upper body | F | 19 | P-7880 |
| 76 - upper body | F | 20 | P-7882 |

### L (PINTO)

| TITLE | SECTION | PAGE | ILLUS. NO. |
|---|---|---|---|
| 62,64 - under body | L | 1 | P-7955 |
| 73 - underbody | L | 5 | P-10385 |
| 62 - upper body | L | 2 | P-7956 |
| 64 - upper body | L | 3 | P-8274 |
| 73 - upper body | L | 4 | P-8933 |

### P (MAVERICK)

| TITLE | SECTION | PAGE | ILLUS. NO. |
|---|---|---|---|
| 54,62 - under body | P | 1 | P-6874 |
| 54 - upper body | P | 3 | P-7958 |
| 62 - upper body | P | 2 | P-6911 |

### S (THUNDERBIRD)

| TITLE | SECTION | PAGE | ILLUS. NO. |
|---|---|---|---|
| 65 - under body | S | 15 | P-8828 |
| 65 - upper body | S | 16 | P-8830 |

### U (BRONCO)

| TITLE | SECTION | PAGE | ILLUS. NO. |
|---|---|---|---|
| 97,98 | U | 1 | P-4963 |
| 97 - roof | U | 2 | P-4969 |
| 98 - roof | U | 2 | P-4968 |

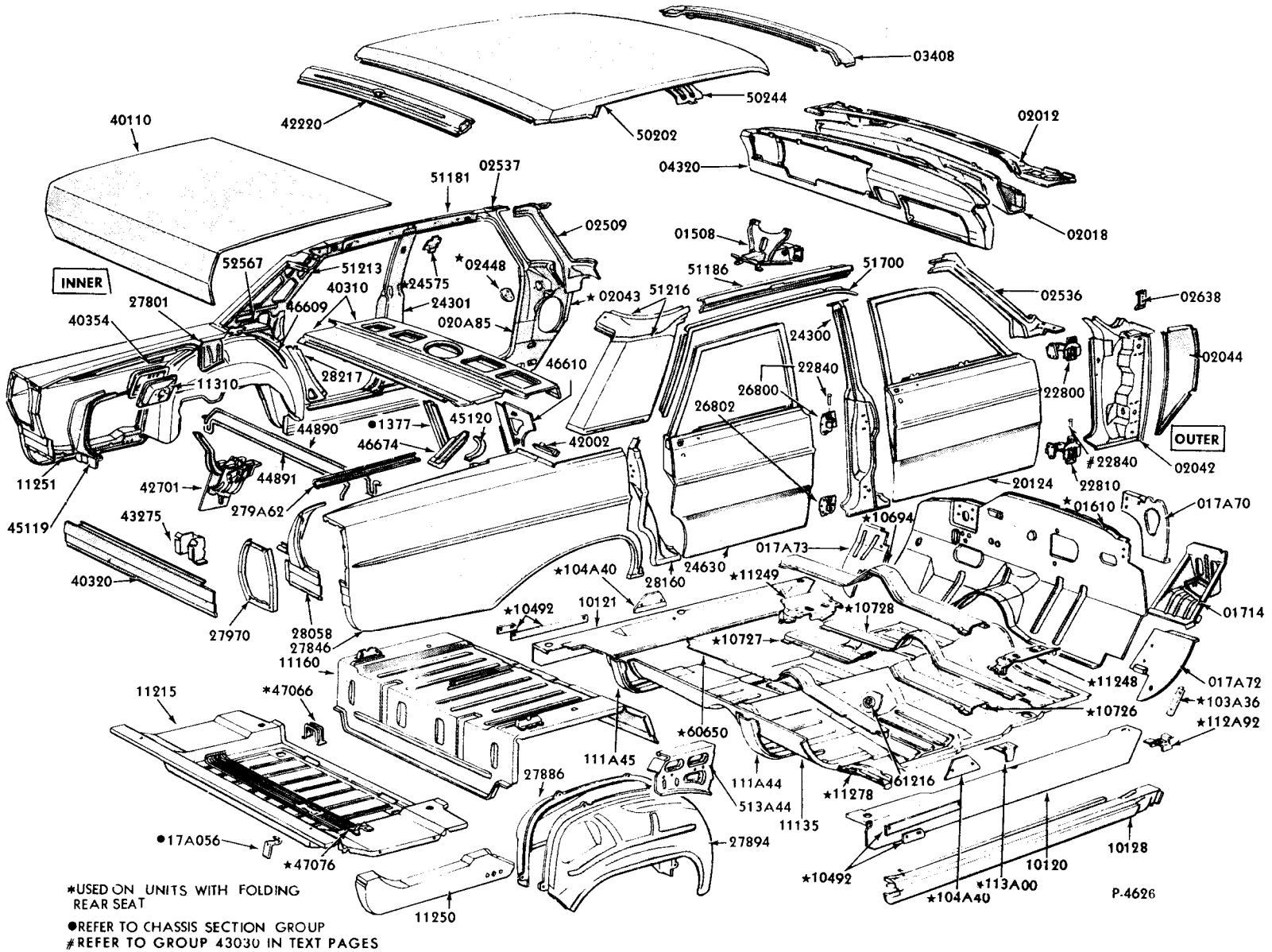


1965 FORD - BODY TYPE 54



COPYRIGHT © 1975 — FORD MOTOR COMPANY — DEARBORN, MICHIGAN

# FORD CAR PARTS

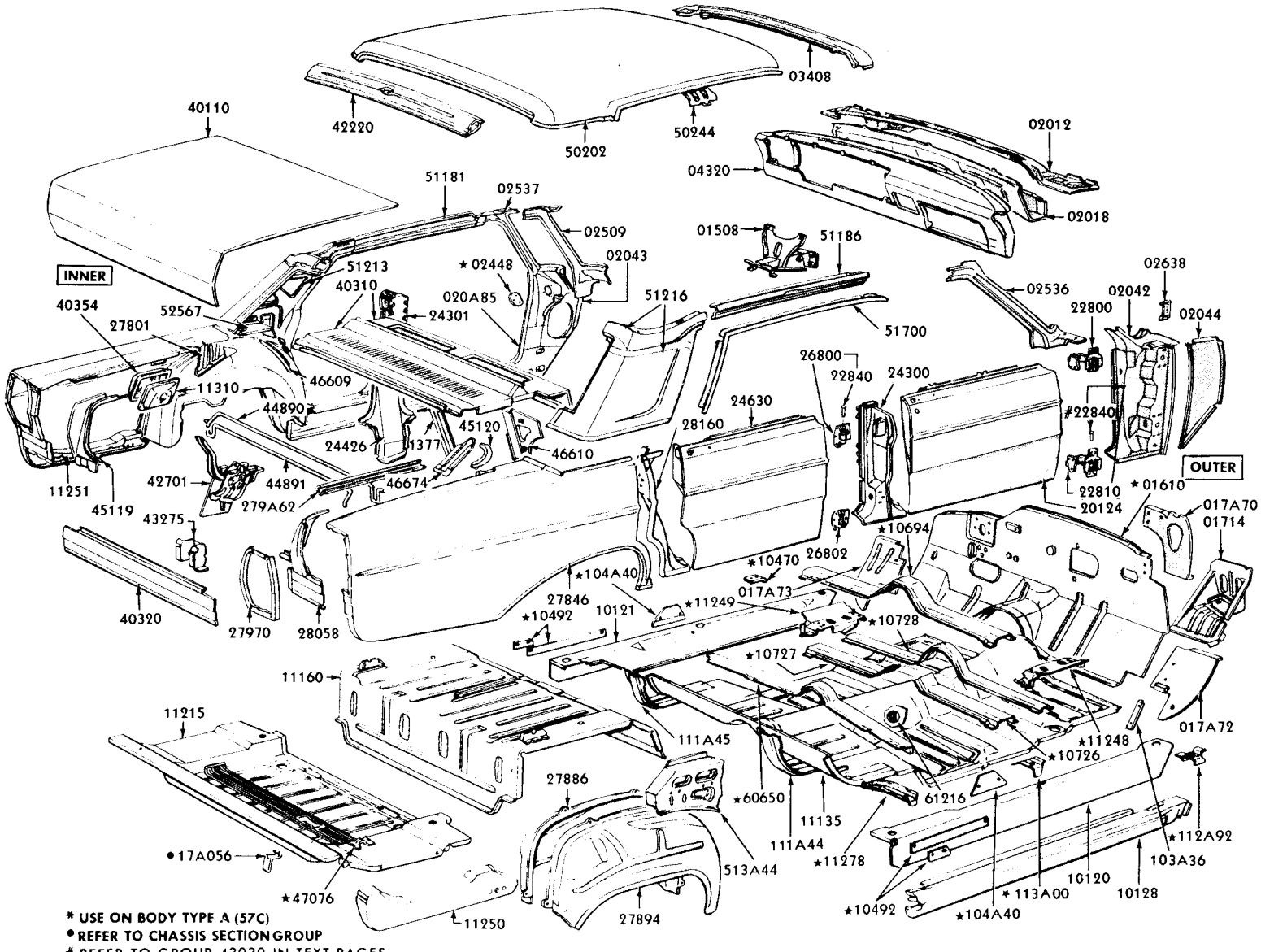

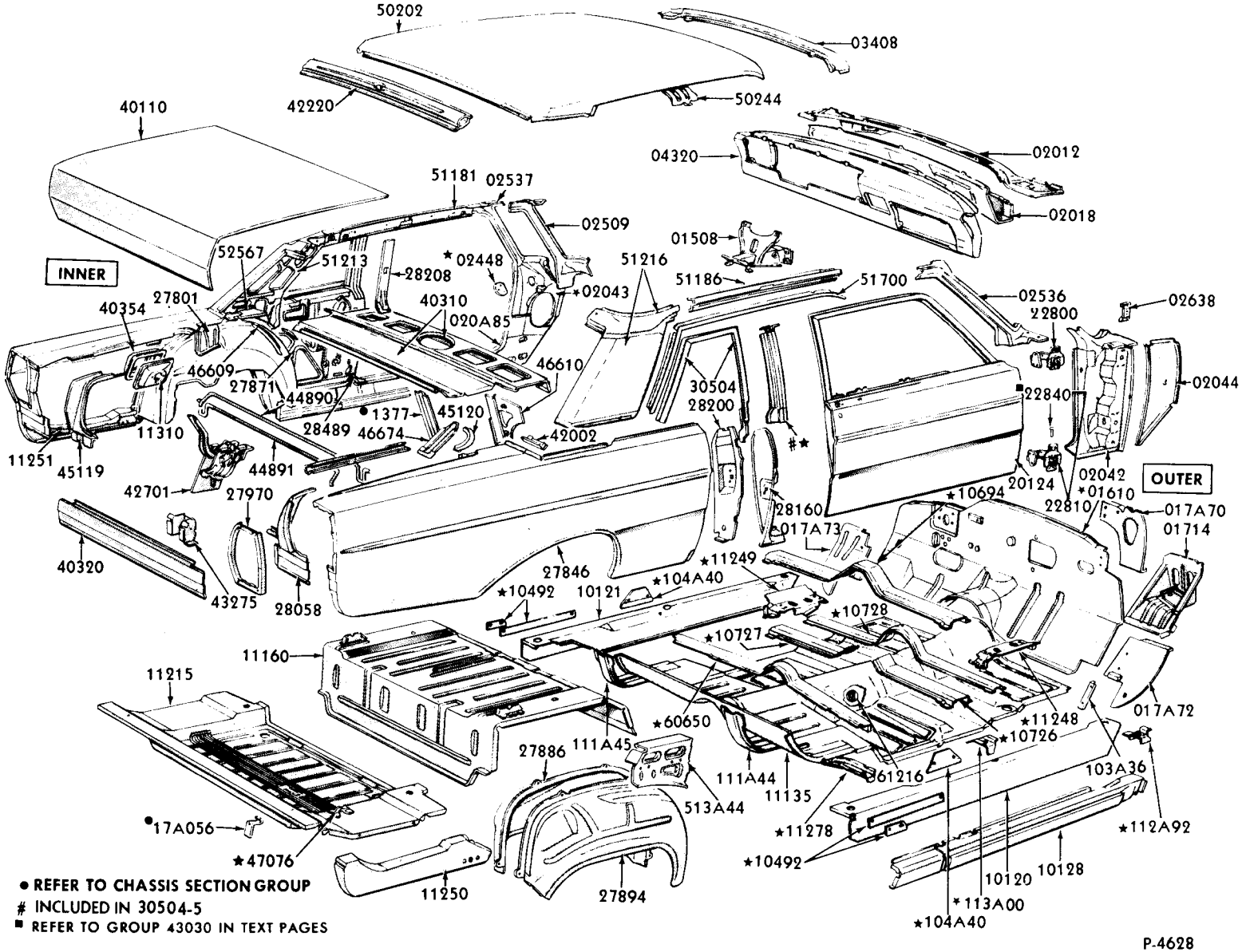



COPYRIGHT © 1975 — FORD MOTOR COMPANY — DEARBORN, MICHIGAN

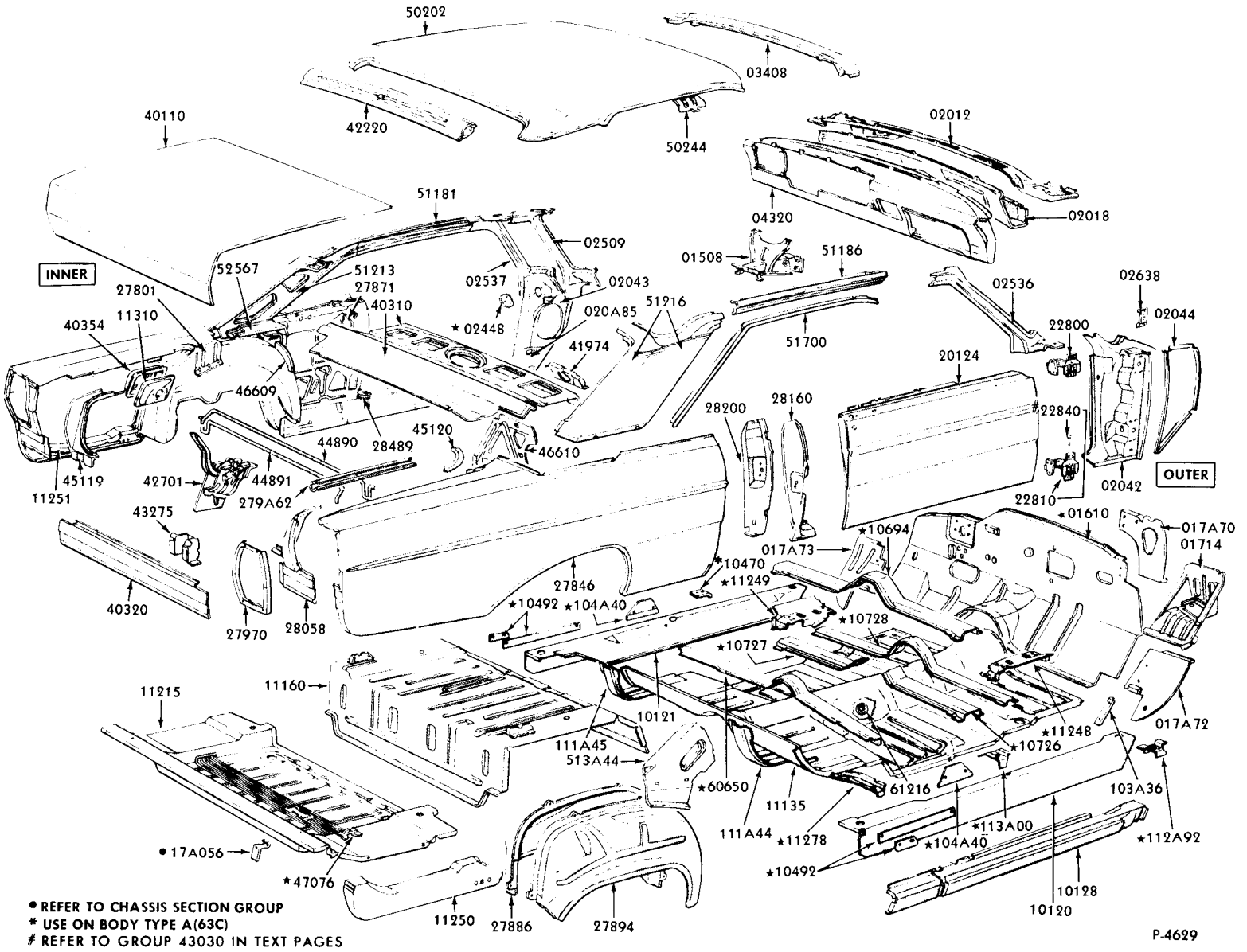


● REFER TO CHASSIS SECTION GROUP
* USE ON BODY TYPE A(63C)
# REFER TO GROUP 43030 IN TEXT PAGES

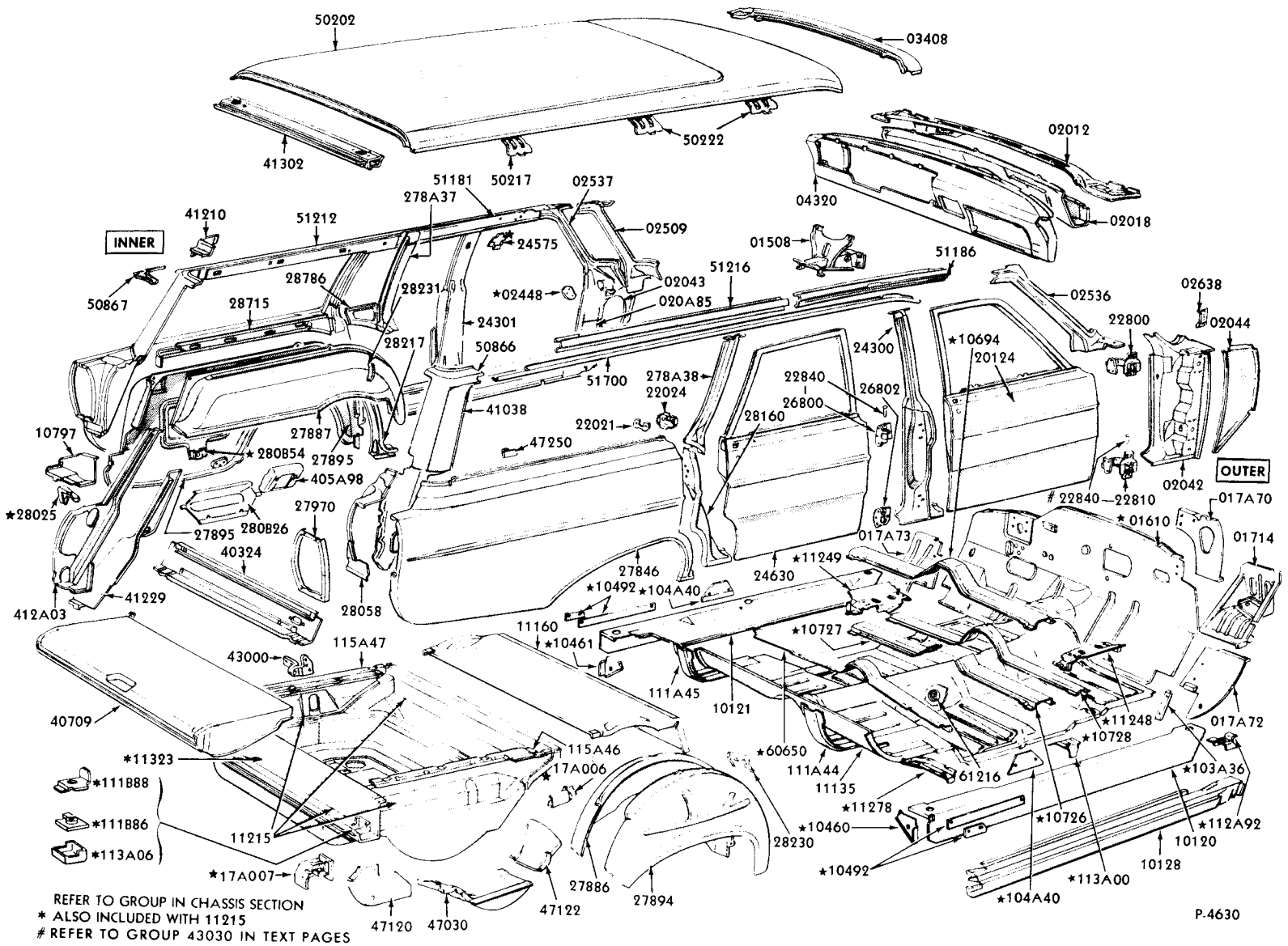


REFER TO GROUP IN CHASSIS SECTION
* ALSO INCLUDED WITH 11215
# REFER TO GROUP 43030 IN TEXT PAGES


COPYRIGHT © 1975— FORD MOTOR COMPANY —DEARBORN, MICHIGAN

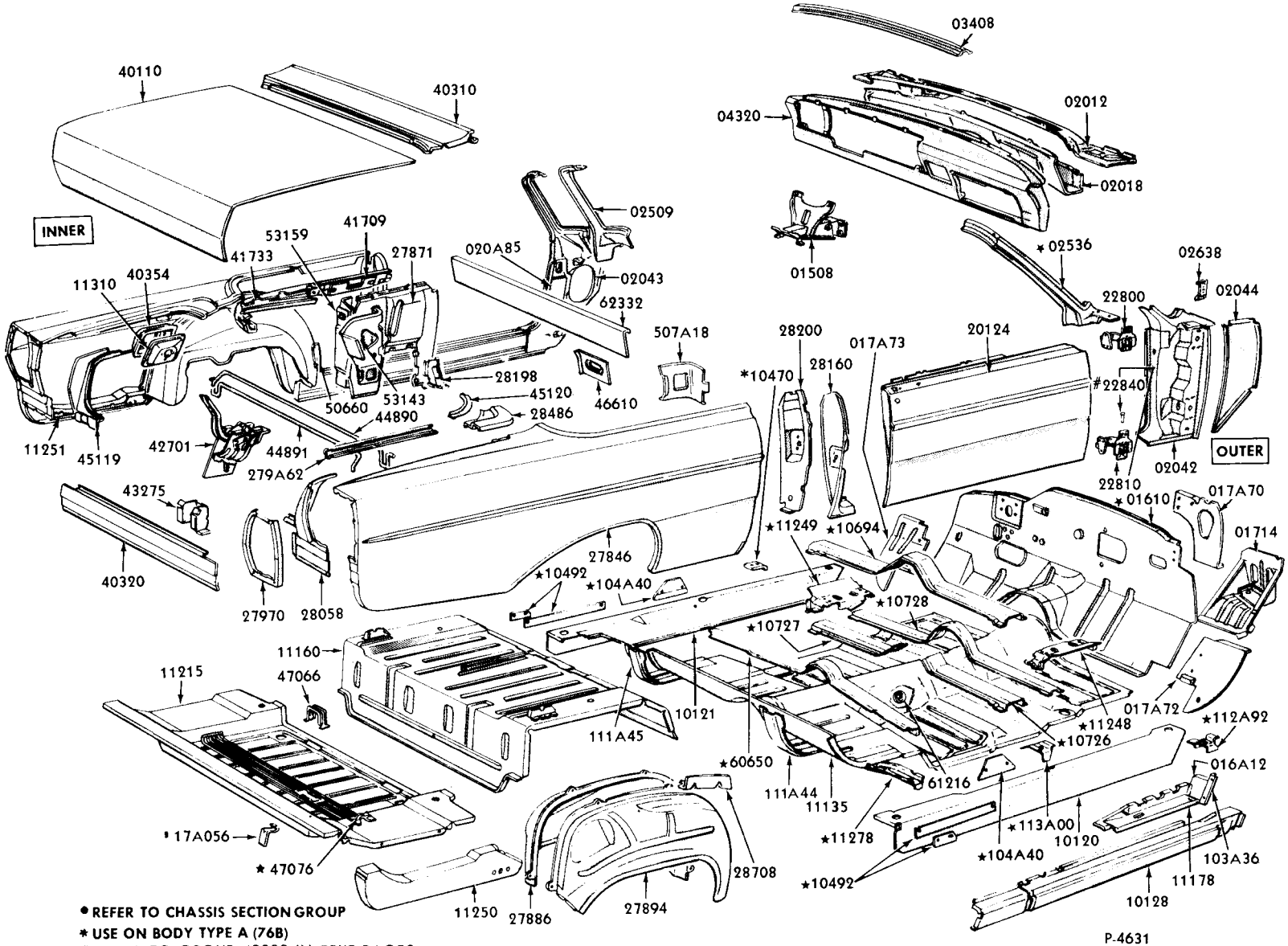


• REFER TO CHASSIS SECTION GROUP
* USE ON BODY TYPE A (76B)
# REFER TO GROUP 43030 IN TEXT PAGES

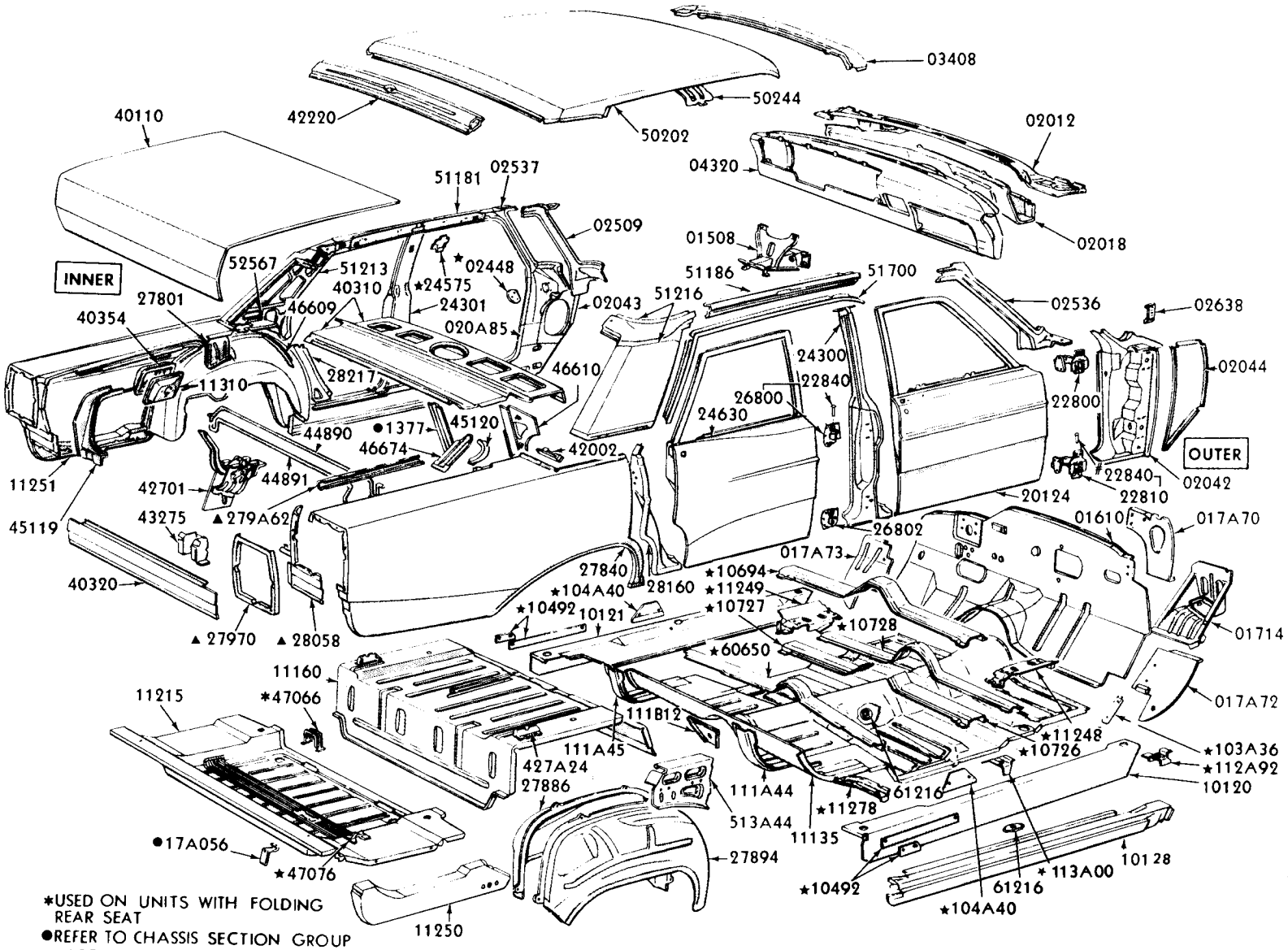



COPYRIGHT © 1975 — FORD MOTOR COMPANY — DEARBORN, MICHIGAN

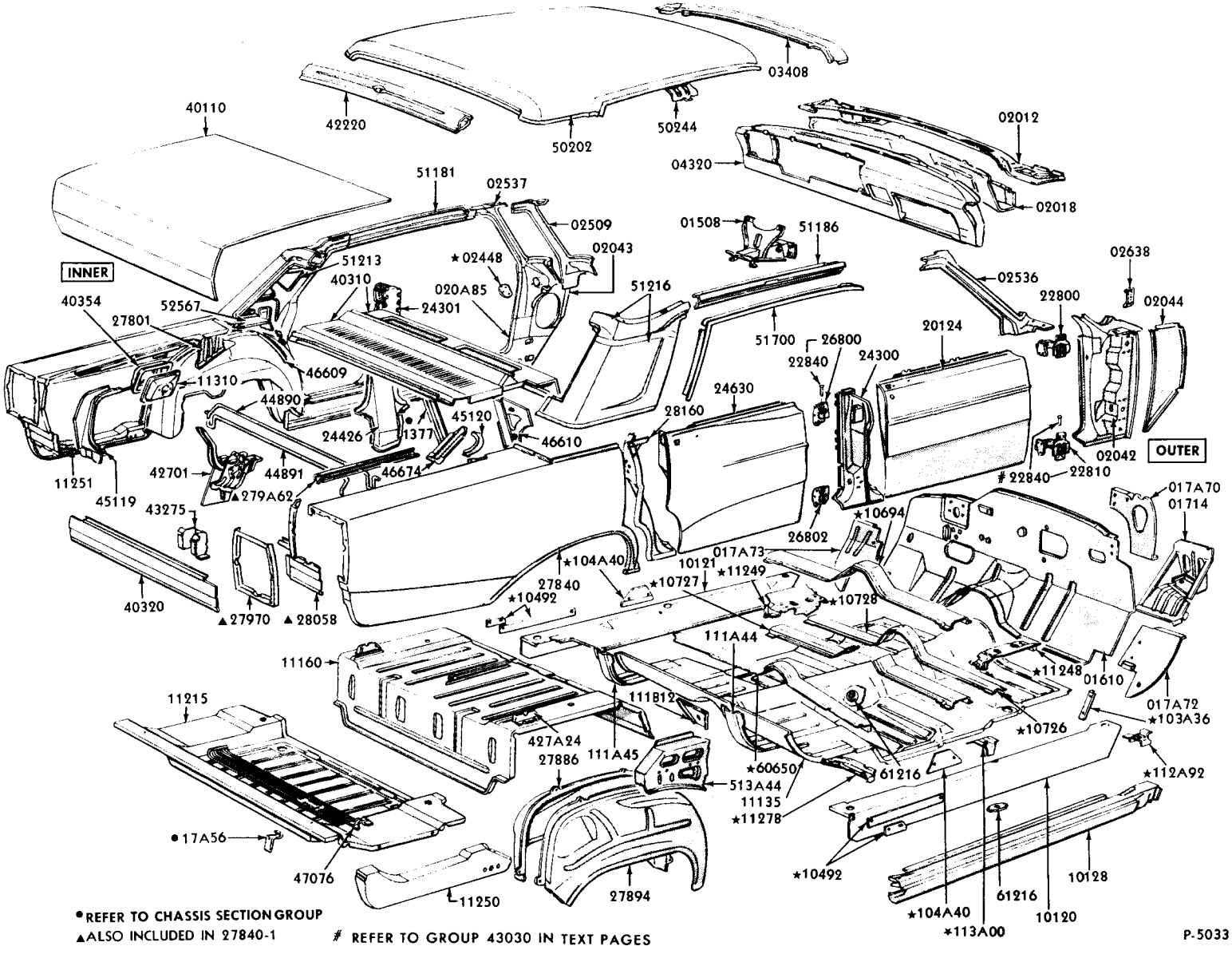


● REFER TO CHASSIS SECTION GROUP

▲ALSO INCLUDED IN 27840-1

# REFER TO GROUP 43030 IN TEXT PAGES

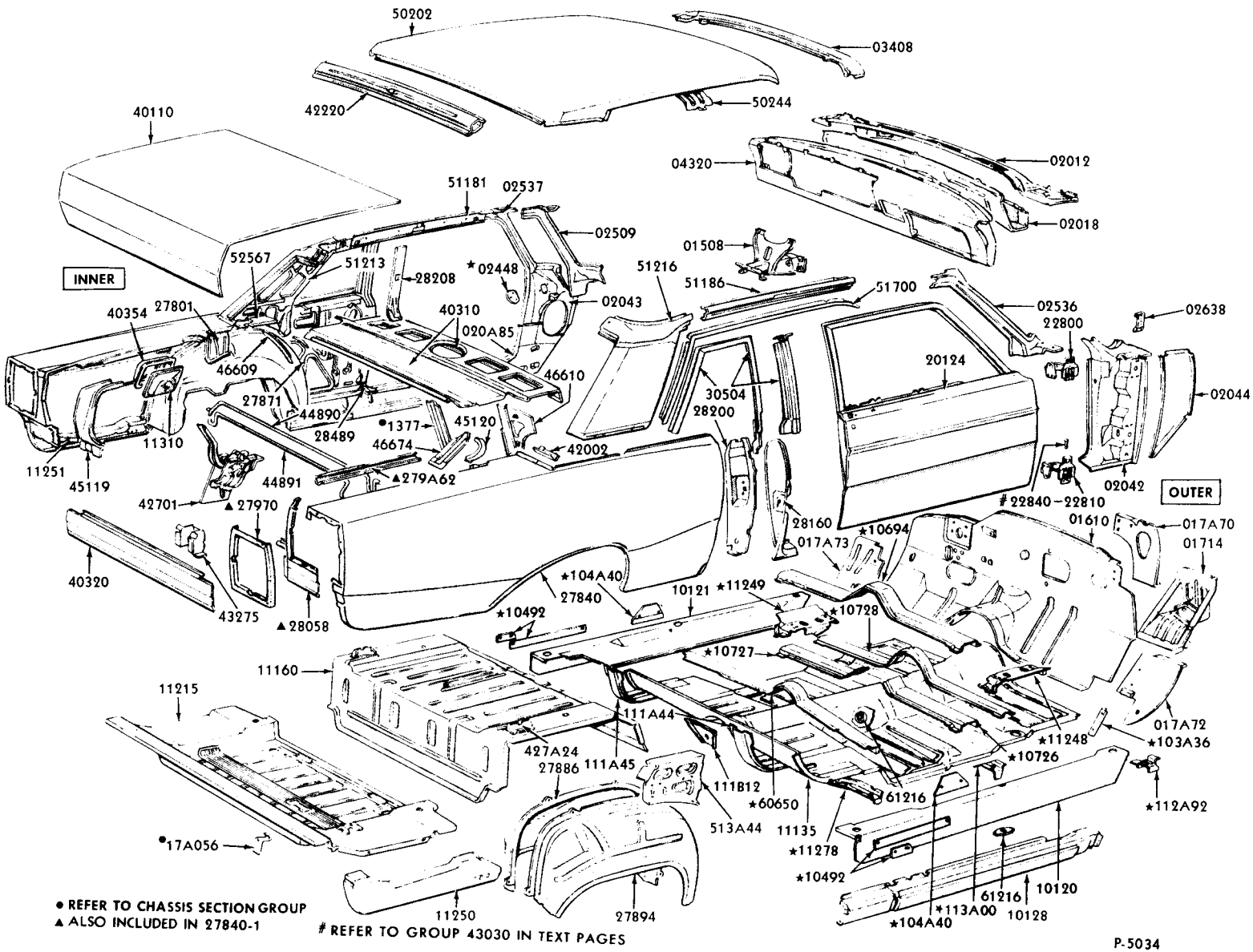



COPYRIGHT © 1975 — FORD MOTOR COMPANY — DEARBORN, MICHIGAN

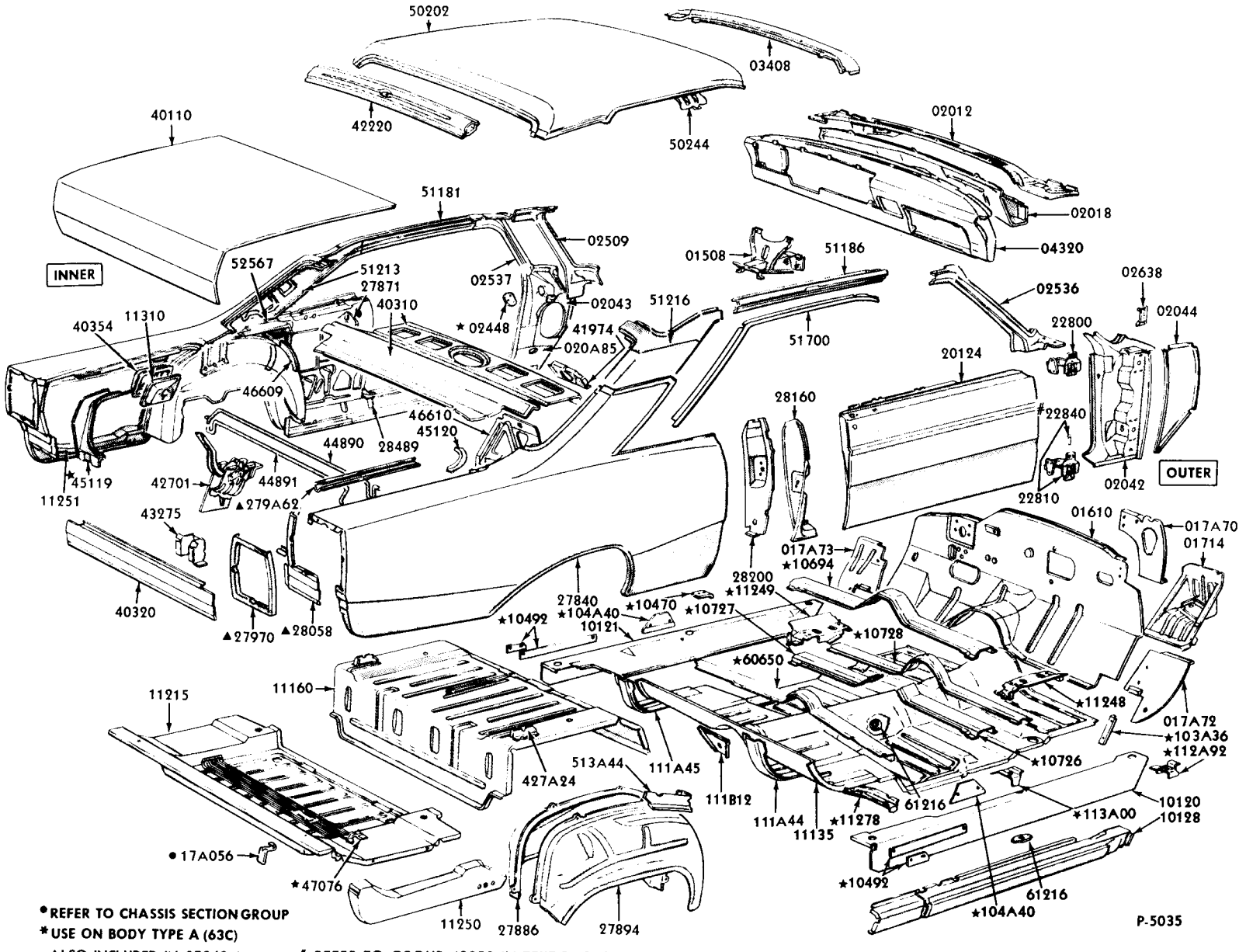


● REFER TO CHASSIS SECTION GROUP
* USE ON BODY TYPE A (63C)
▲ALSO INCLUDED IN 27840-1
# REFER TO GROUP 43030 IN TEXT PAGES

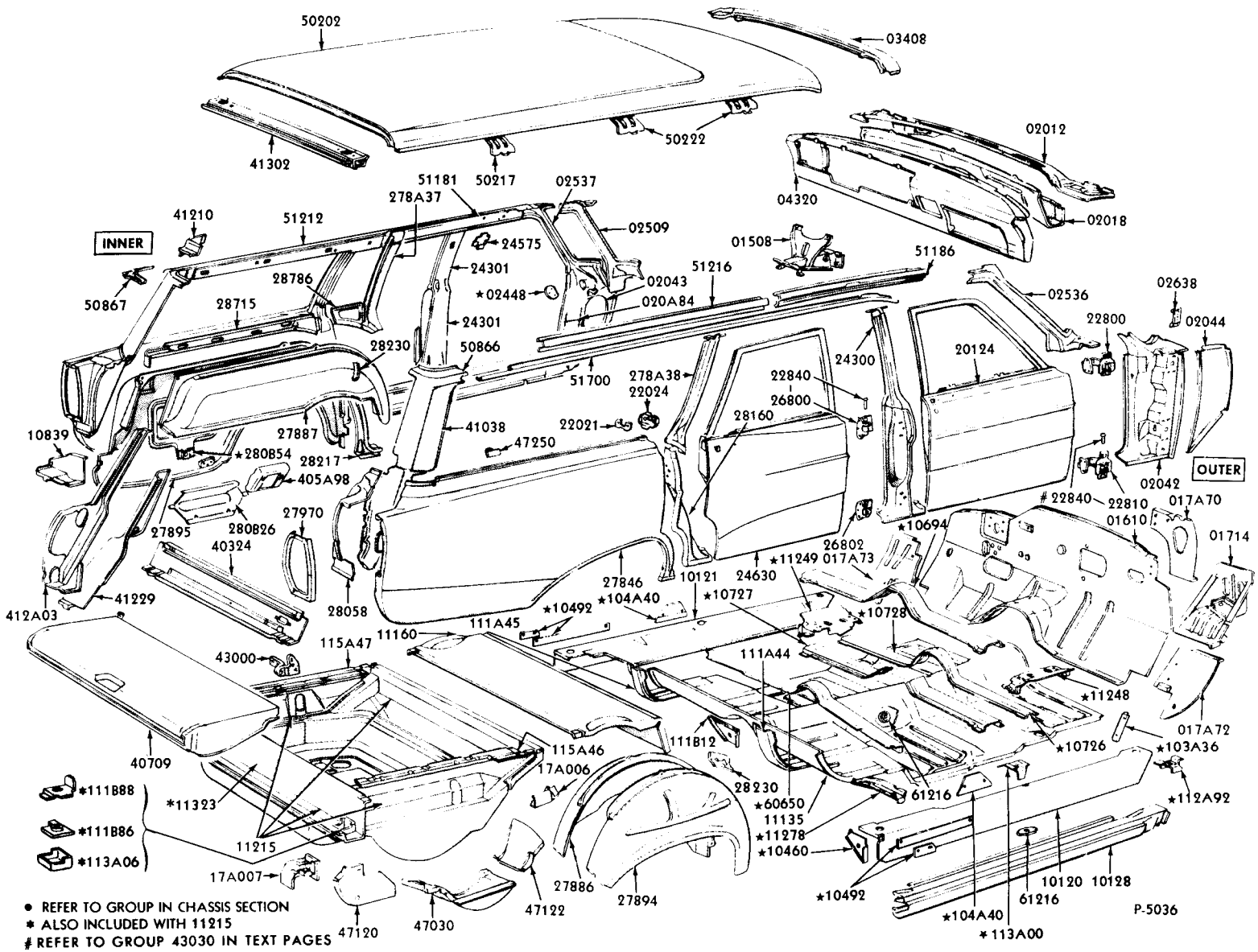


• REFER TO GROUP IN CHASSIS SECTION
* ALSO INCLUDED WITH 11215
# REFER TO GROUP 43030 IN TEXT PAGES


COPYRIGHT © 1975 — FORD MOTOR COMPANY — DEARBORN, MICHIGAN

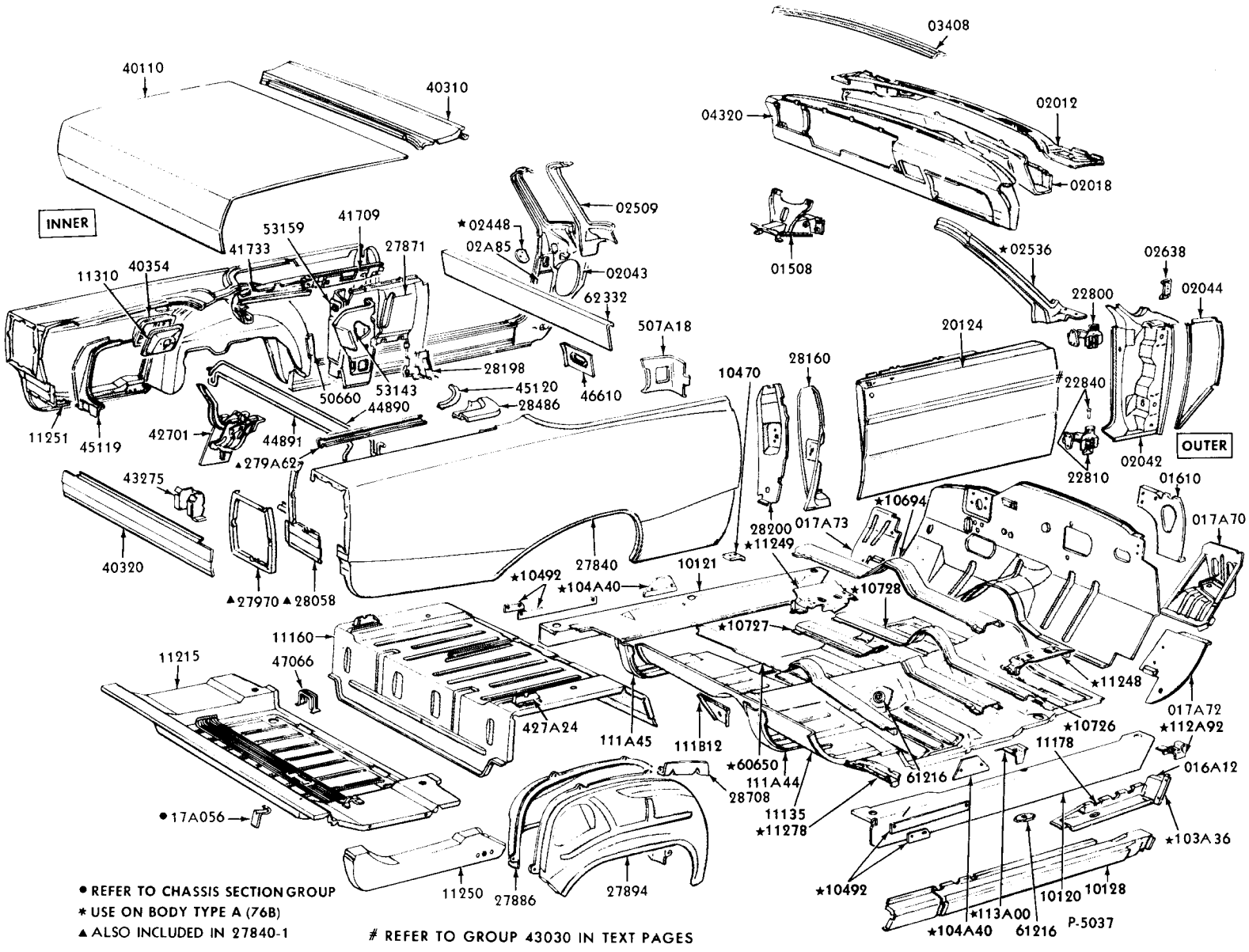


● REFER TO CHASSIS SECTION GROUP
★ USE ON BODY TYPE A (76B)
▲ ALSO INCLUDED IN 27840-1

# REFER TO GROUP 43030 IN TEXT PAGES

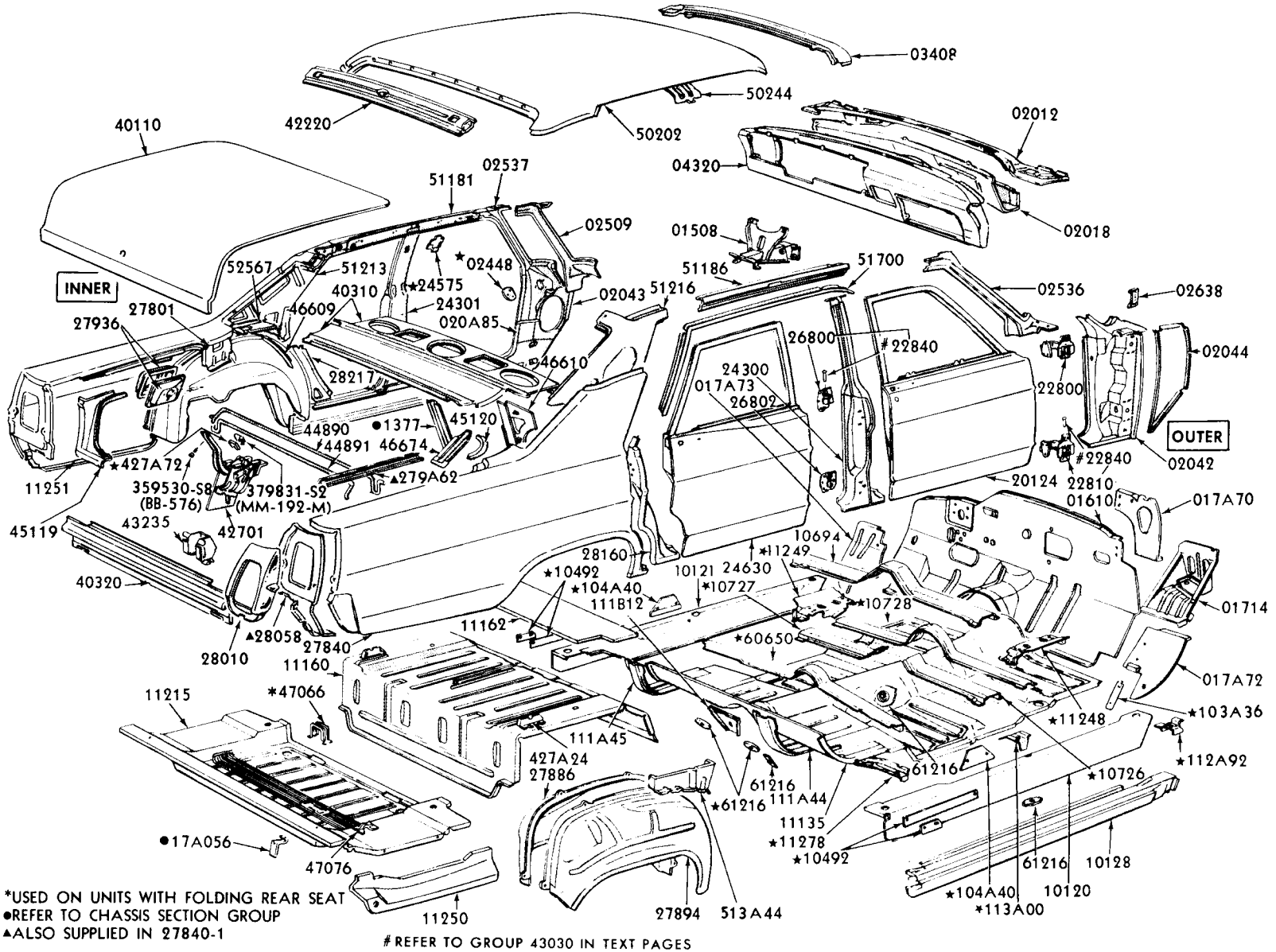



COPYRIGHT © 1975 — FORD MOTOR COMPANY — DEARBORN, MICHIGAN

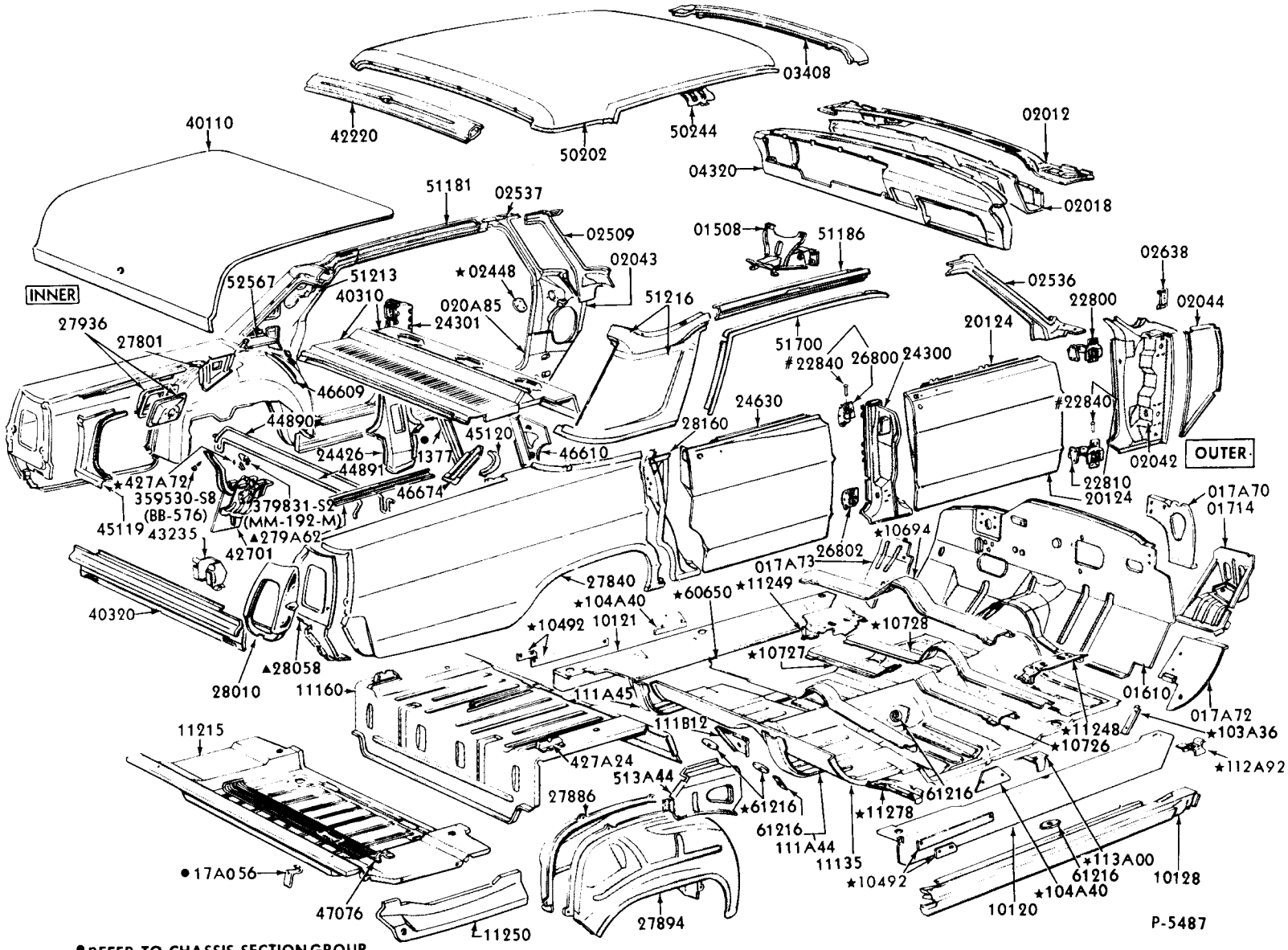


● REFER TO CHASSIS SECTION GROUP

▲ALSO SUPPLIED IN 27840-1

# REFER TO GROUP 43030 IN TEXT PAGES

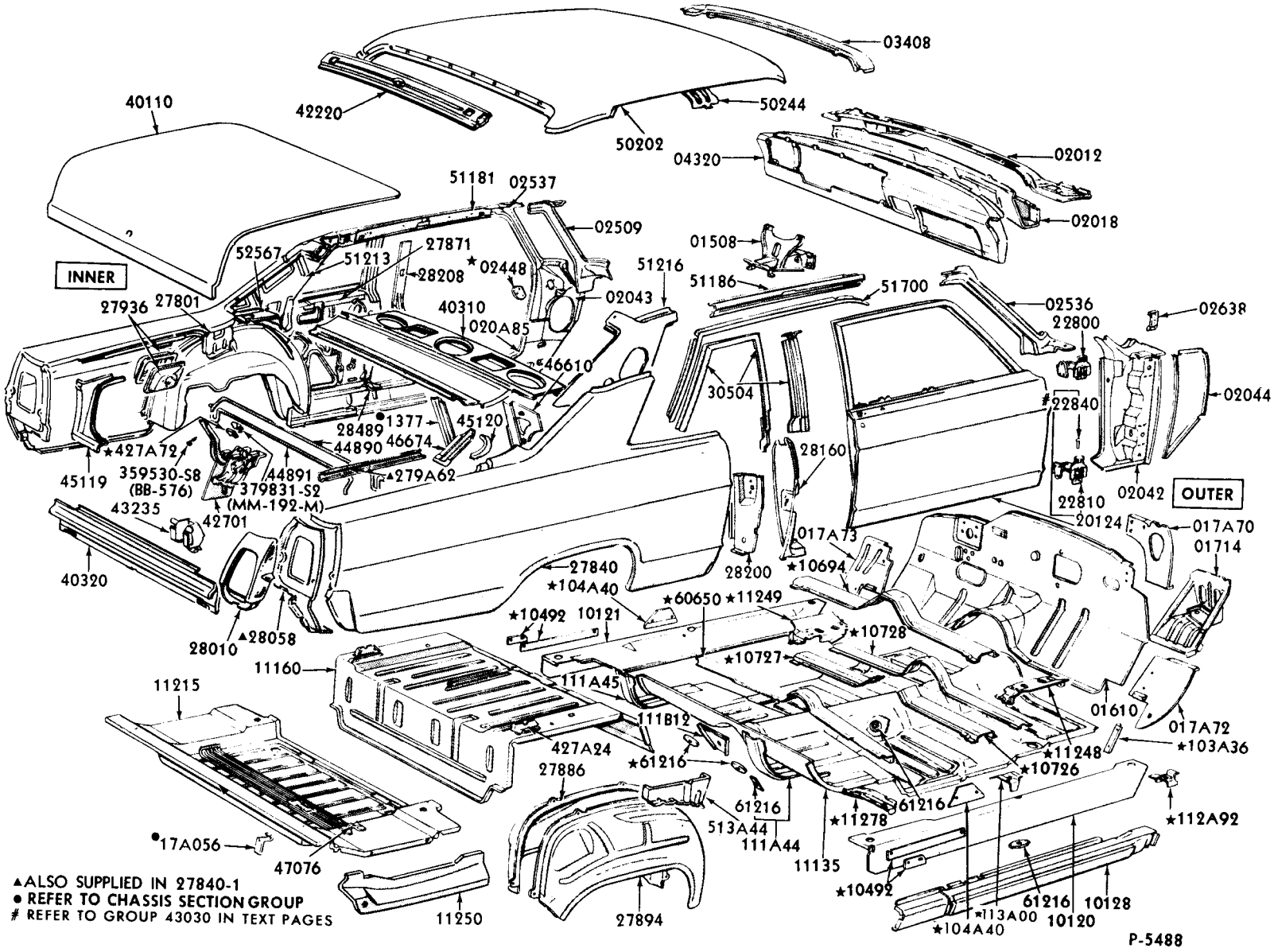


▲ALSO SUPPLIED IN 27840-1
● REFER TO CHASSIS SECTION GROUP
# REFER TO GROUP 43030 IN TEXT PAGES


COPYRIGHT © 1975 — FORD MOTOR COMPANY — DEARBORN, MICHIGAN

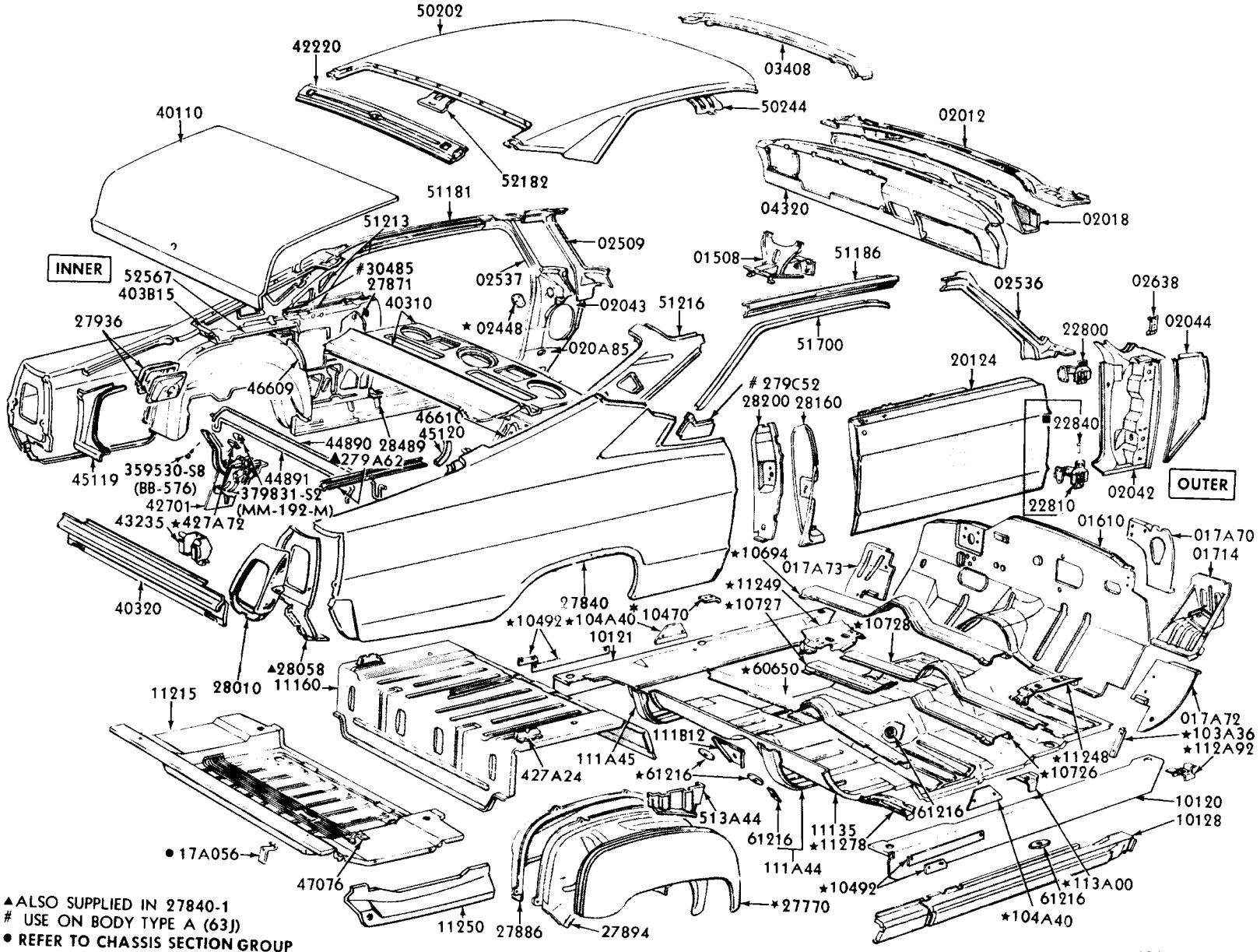


▲ALSO SUPPLIED IN 27840-1
# USE ON BODY TYPE A (63J)
● REFER TO CHASSIS SECTION GROUP
* USE ON BODY TYPE A(63C)

■REFER TO GROUP 43030 IN TEXT PAGES

P-5489

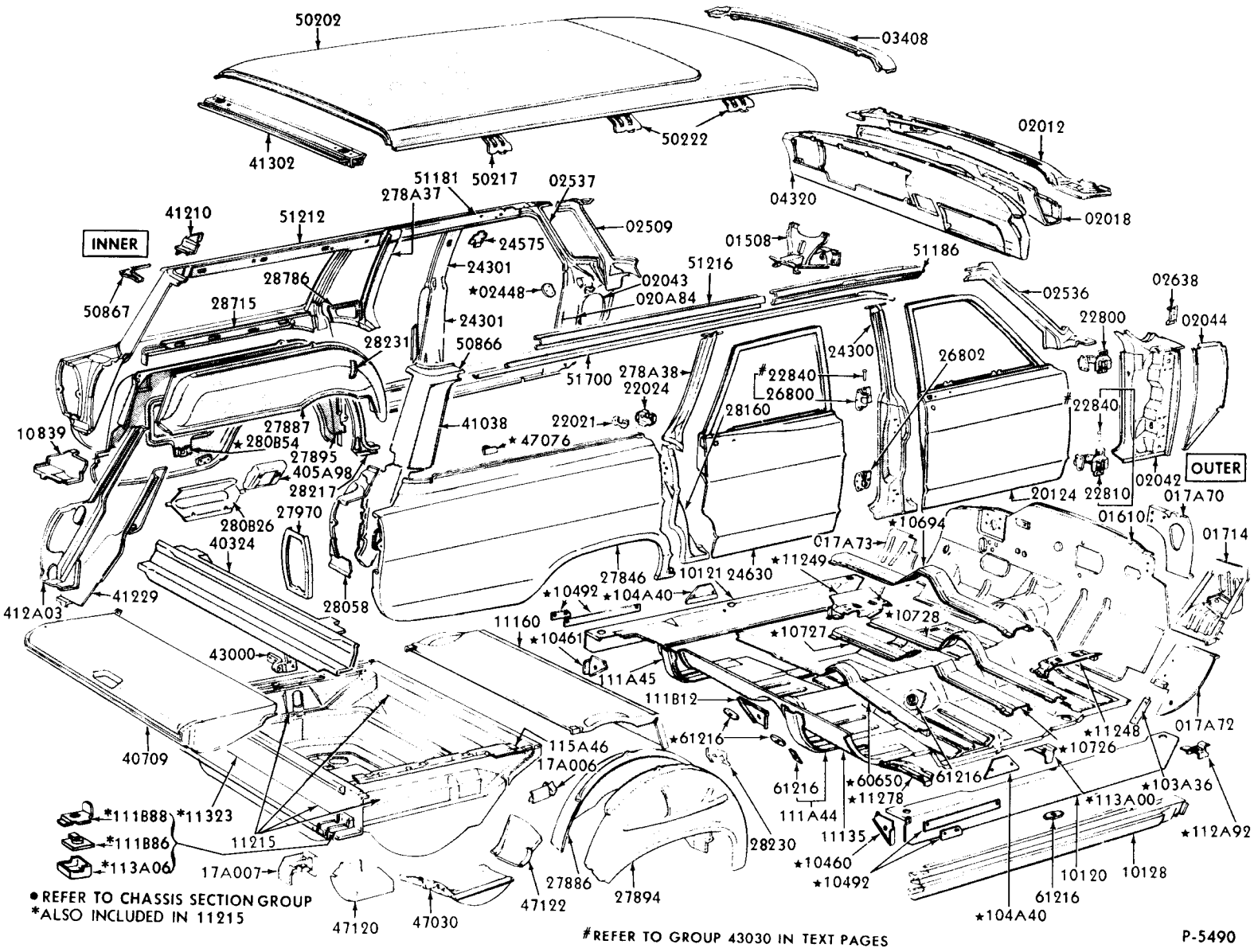



COPYRIGHT © 1975 — FORD MOTOR COMPANY — DEARBORN, MICHIGAN

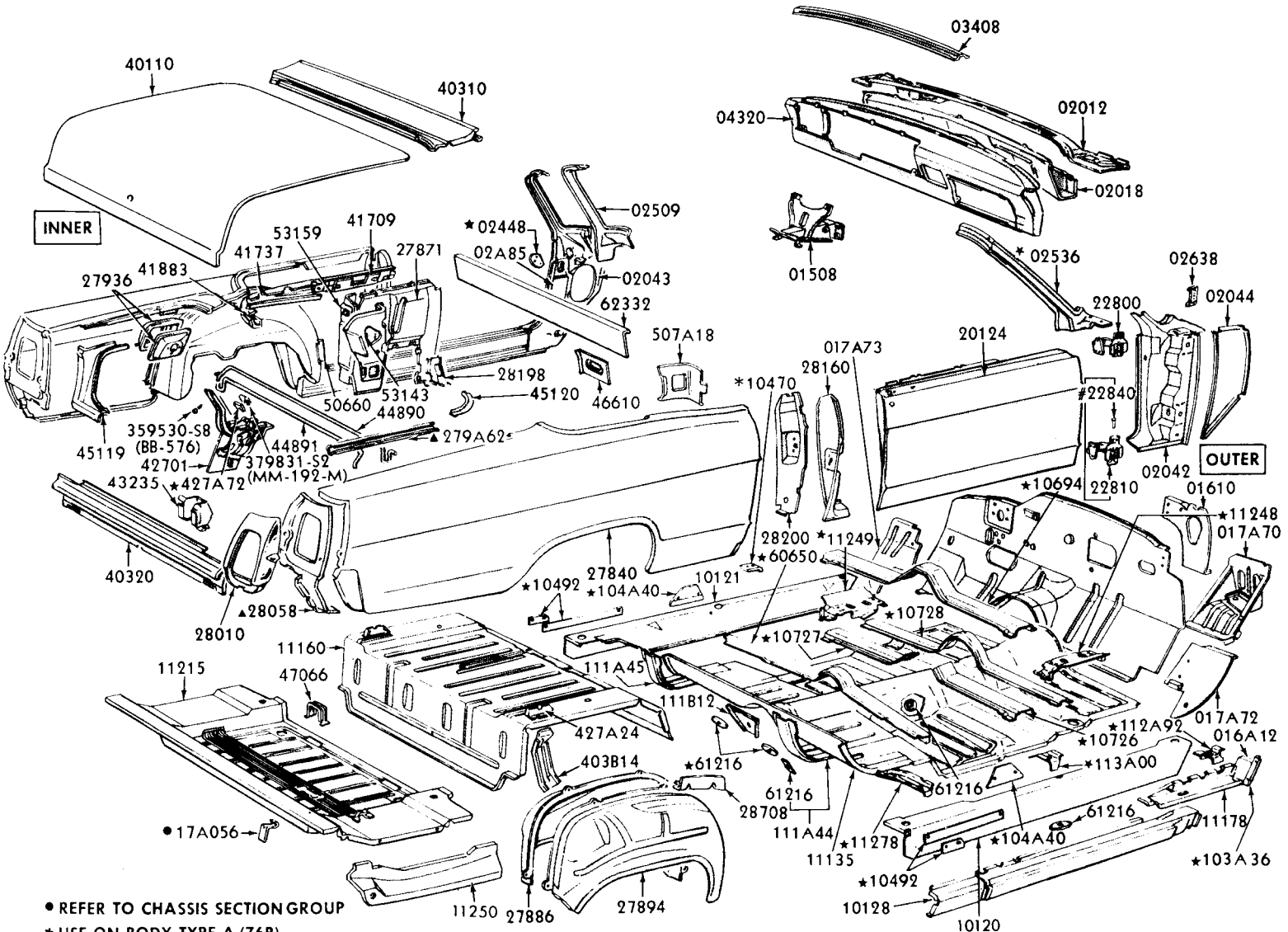


● REFER TO CHASSIS SECTION GROUP

* USE ON BODY TYPE A (76B)

▲ALSO INCLUDED IN 27840-1

# REFER TO GROUP 43030 IN TEXT PAGES

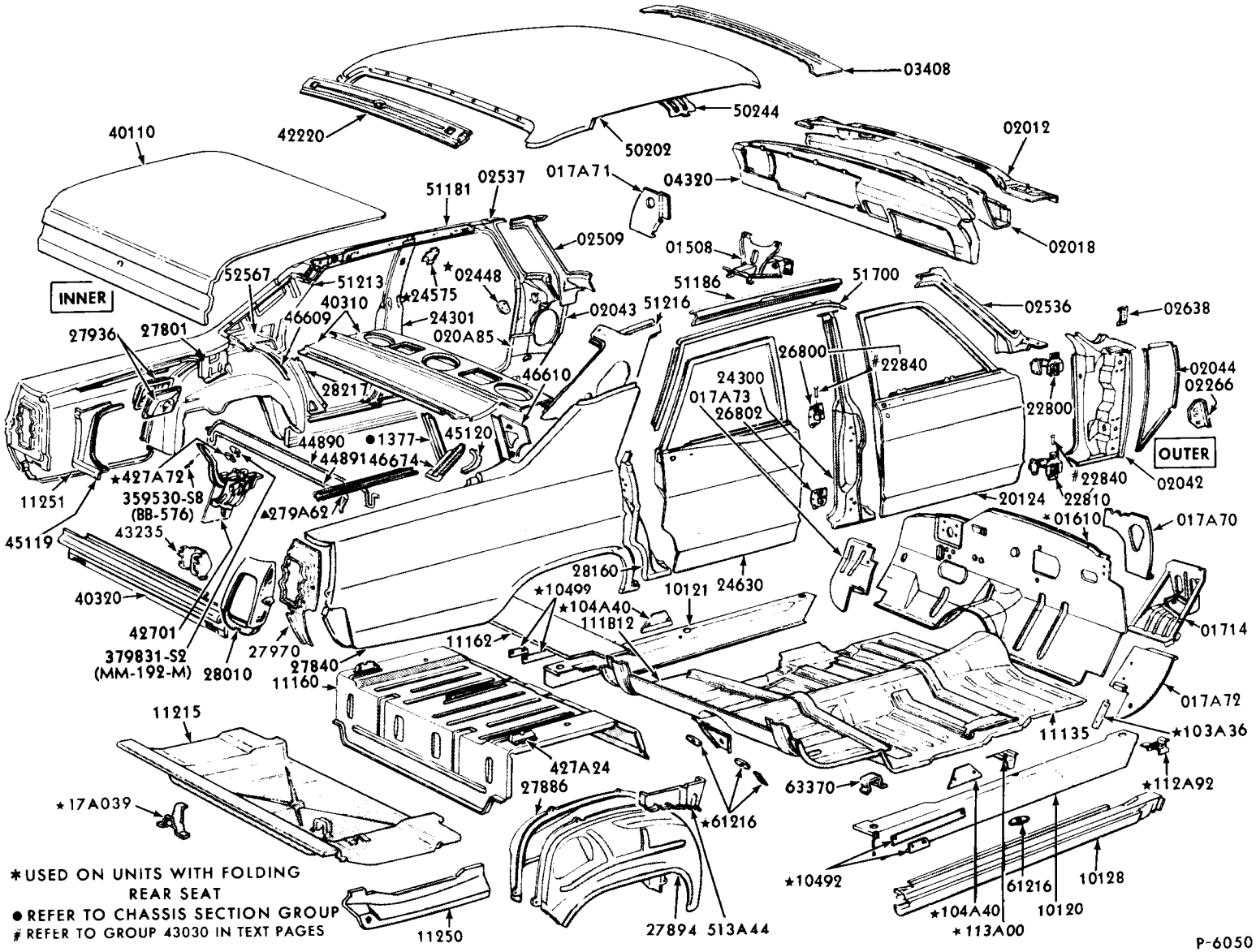



COPYRIGHT © 1975 — FORD MOTOR COMPANY — DEARBORN, MICHIGAN

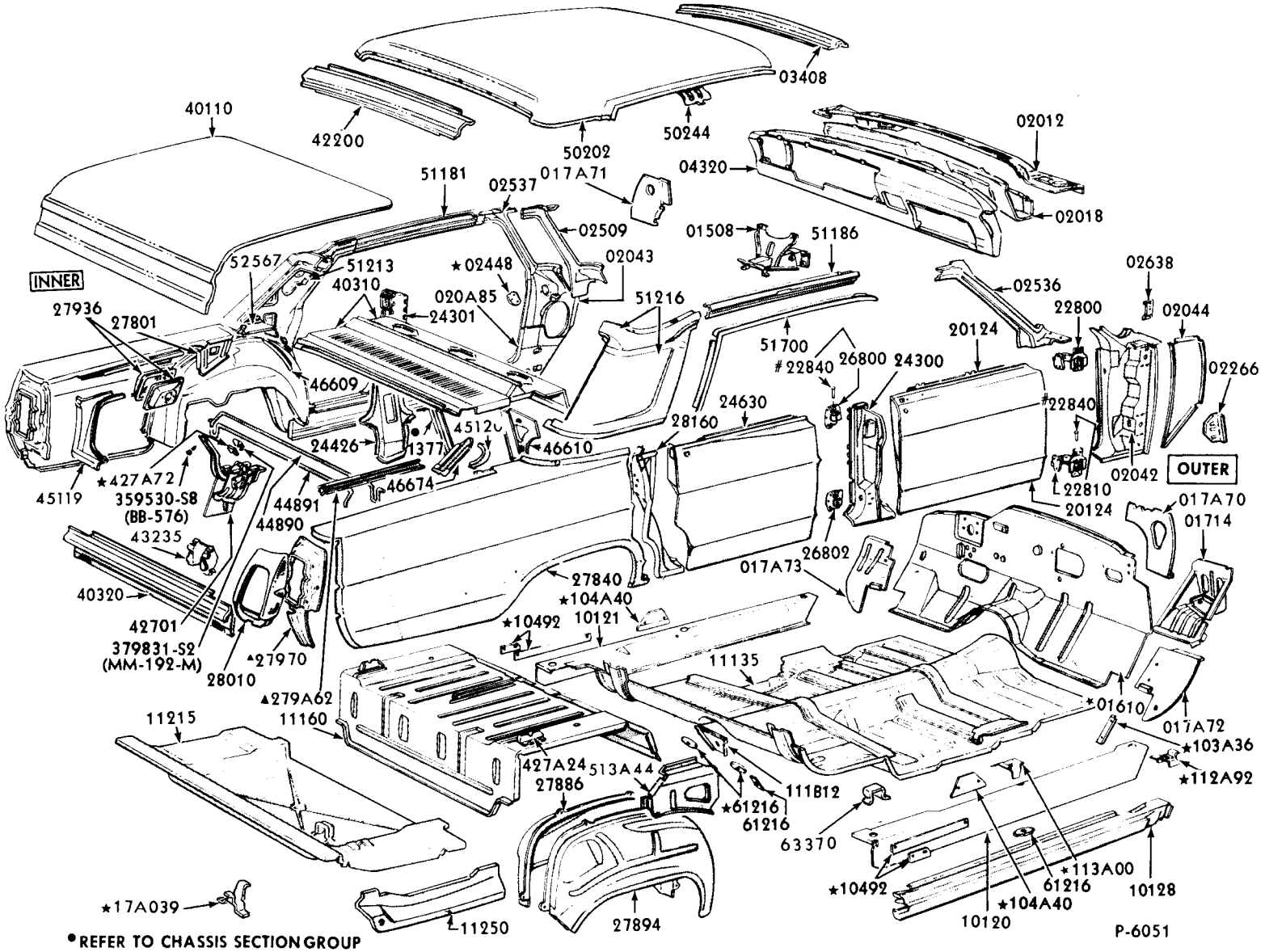


●REFER TO CHASSIS SECTION GROUP

▲ALSO SUPPLIED IN 27840-1

#REFER TO GROUP 43030 IN TEXT PAGES

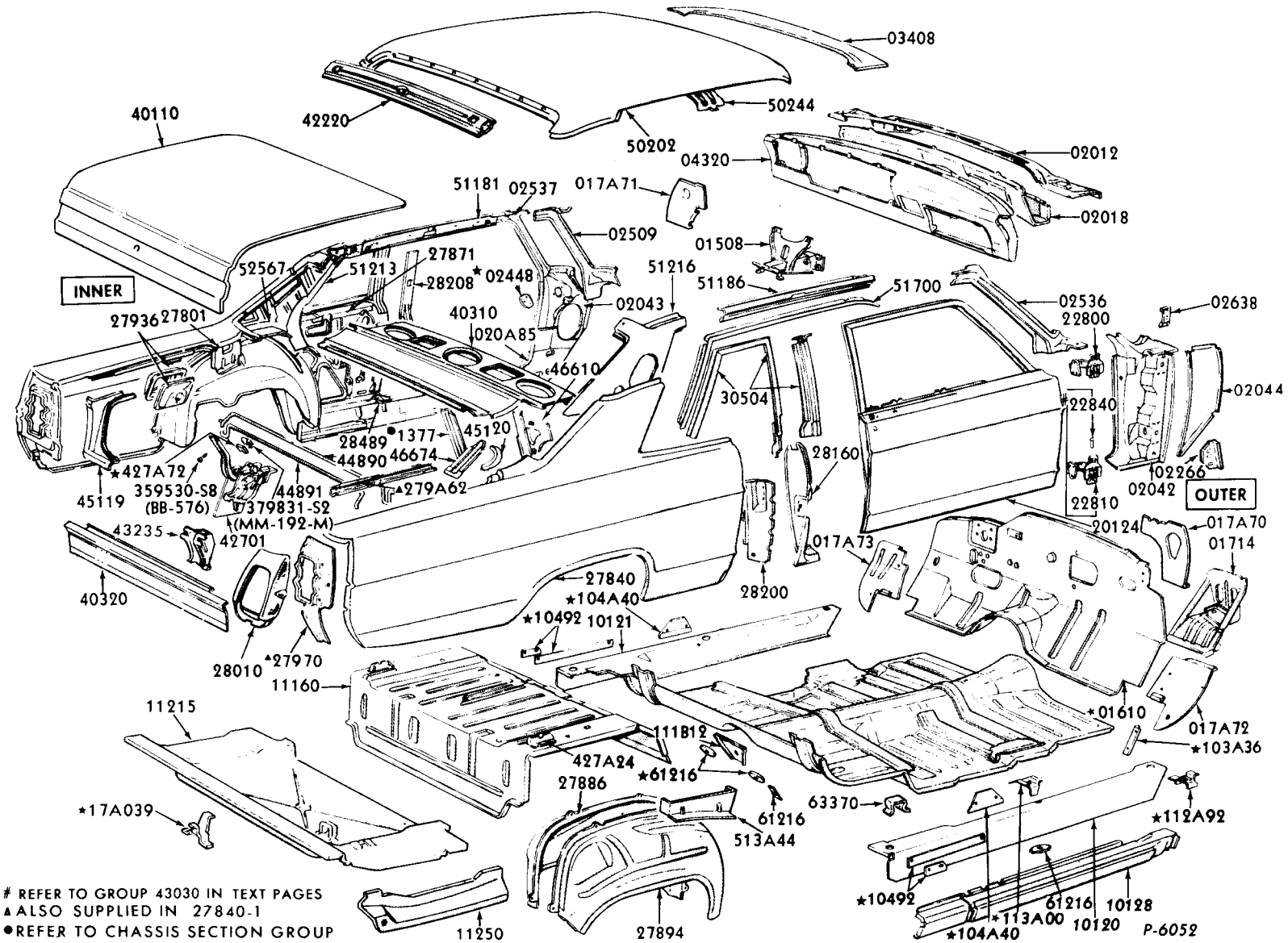


# REFER TO GROUP 43030 IN TEXT PAGES
▲ALSO SUPPLIED IN 27840-1
●REFER TO CHASSIS SECTION GROUP


COPYRIGHT © 1975 — FORD MOTOR COMPANY — DEARBORN, MICHIGAN

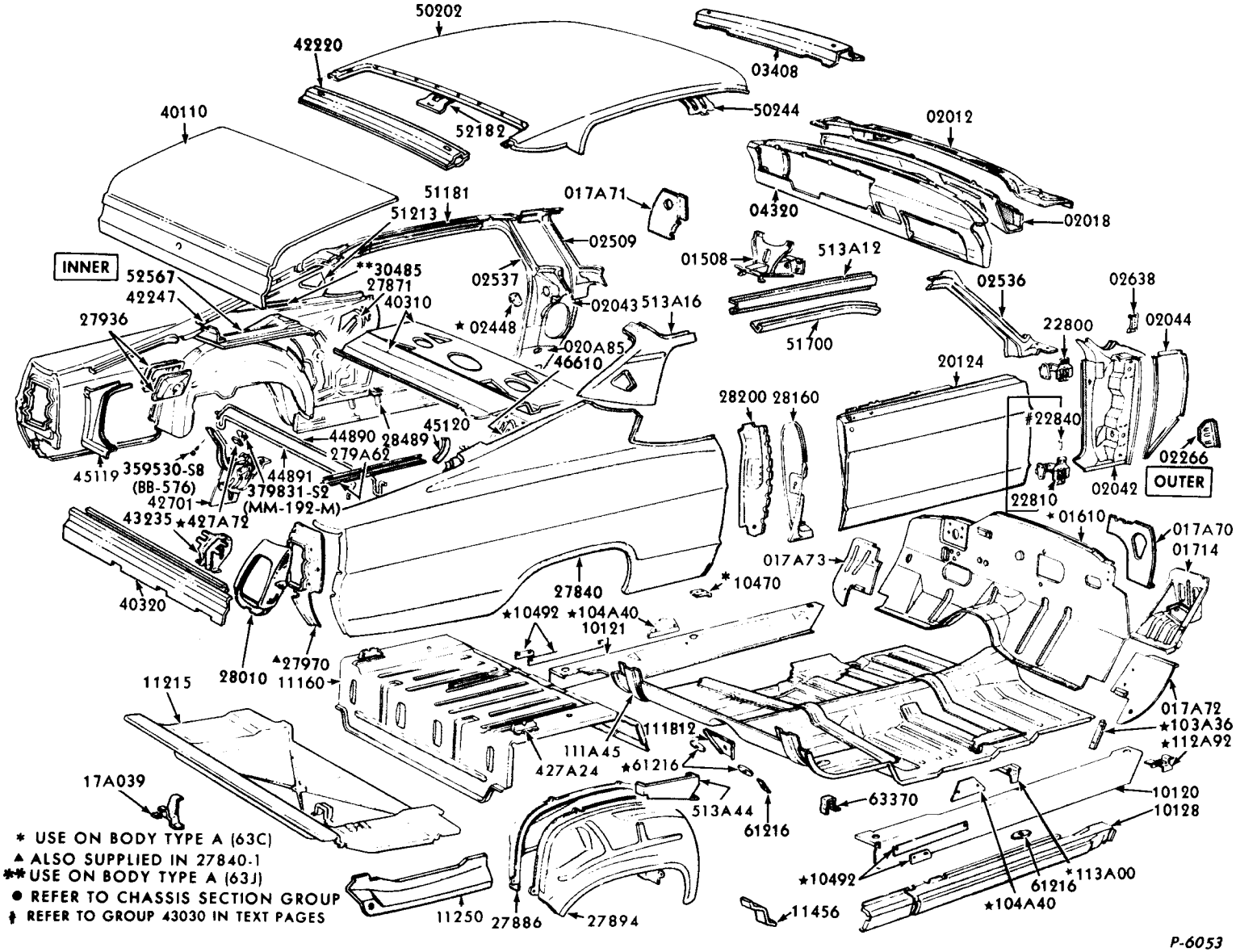
50202
42220
03408
50244
52182
02012
40110
51181
017A71
04320
02018
51213
02509
513A12
01508
INNER
**30485
52567
27871
02537
02536
02638
42247
40310
02043
513A16
27936
* 02448
22800
02044
020A85
51700
46610
20124
28200 28160
‡22840
45120
44890
28489
279A62
02266
45119
359530-S8
(BB-576)
44891
379831-S2
(MM-192-M)
42701
02042
OUTER
22810
43235
*427A72
*01610
017A70
01714
017A73
27840
*10470
40320
*10492
*104A40
10121
▲27970
28010
11160
11215
017A72
*103A36
*112A92
111B12
111A45
427A24
*61216
17A039
513A44
63370
10120
10128
61216
* USE ON BODY TYPE A (63C)
▲ ALSO SUPPLIED IN 27840-1
** USE ON BODY TYPE A (63J)
● REFER TO CHASSIS SECTION GROUP
‡ REFER TO GROUP 43030 IN TEXT PAGES
*10492
*113A00
61216
*104A40
11250
27886
27894
11456
P-6053

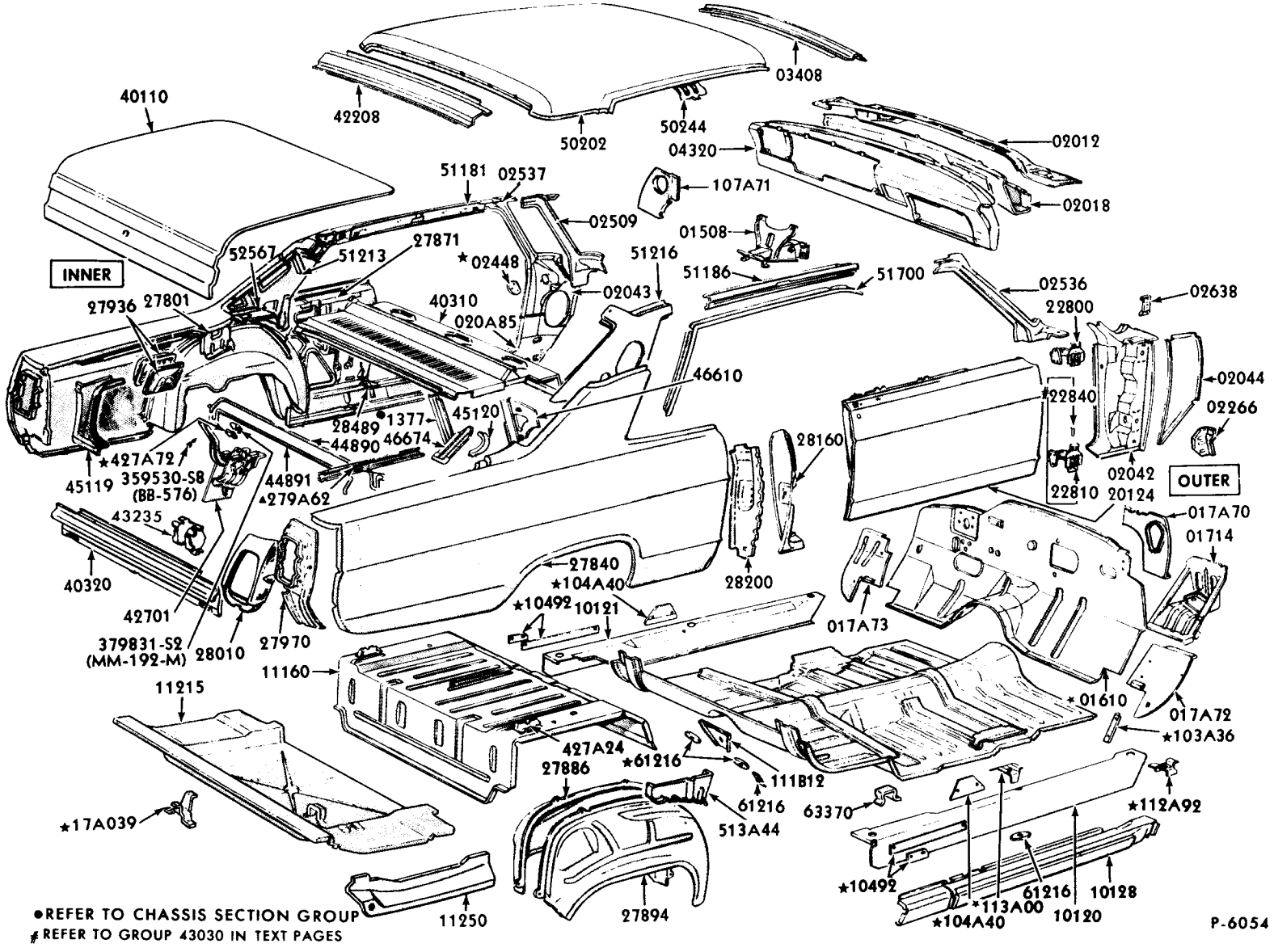


●REFER TO CHASSIS SECTION GROUP
# REFER TO GROUP 43030 IN TEXT PAGES


COPYRIGHT © 1975 — FORD MOTOR COMPANY — DEARBORN, MICHIGAN

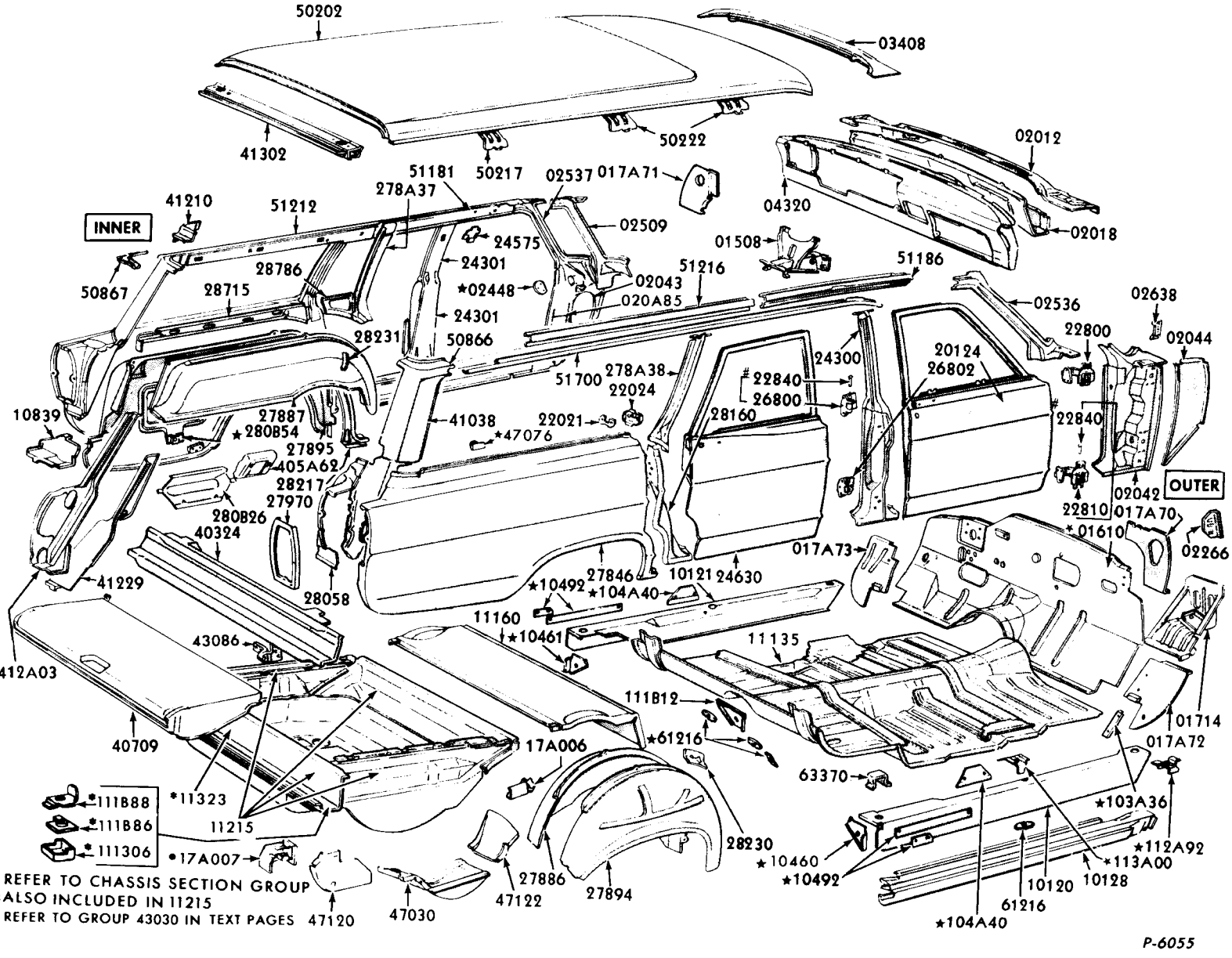


● REFER TO CHASSIS SECTION GROUP
*ALSO INCLUDED IN 11215
# REFER TO GROUP 43030 IN TEXT PAGES

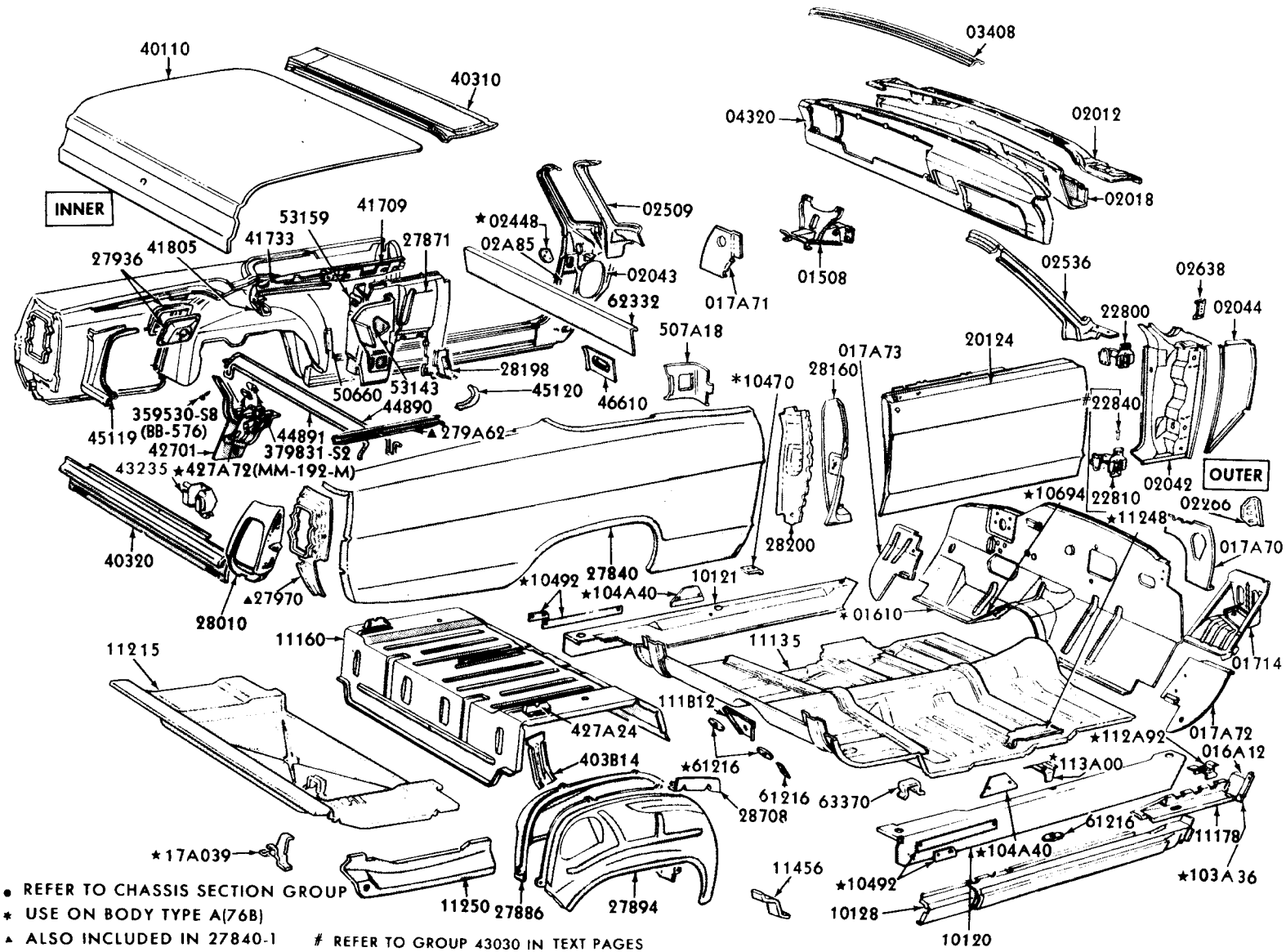


• REFER TO CHASSIS SECTION GROUP
* USE ON BODY TYPE A(76B)
▲ ALSO INCLUDED IN 27840-1
# REFER TO GROUP 43030 IN TEXT PAGES


COPYRIGHT © 1975 — FORD MOTOR COMPANY — DEARBORN, MICHIGAN

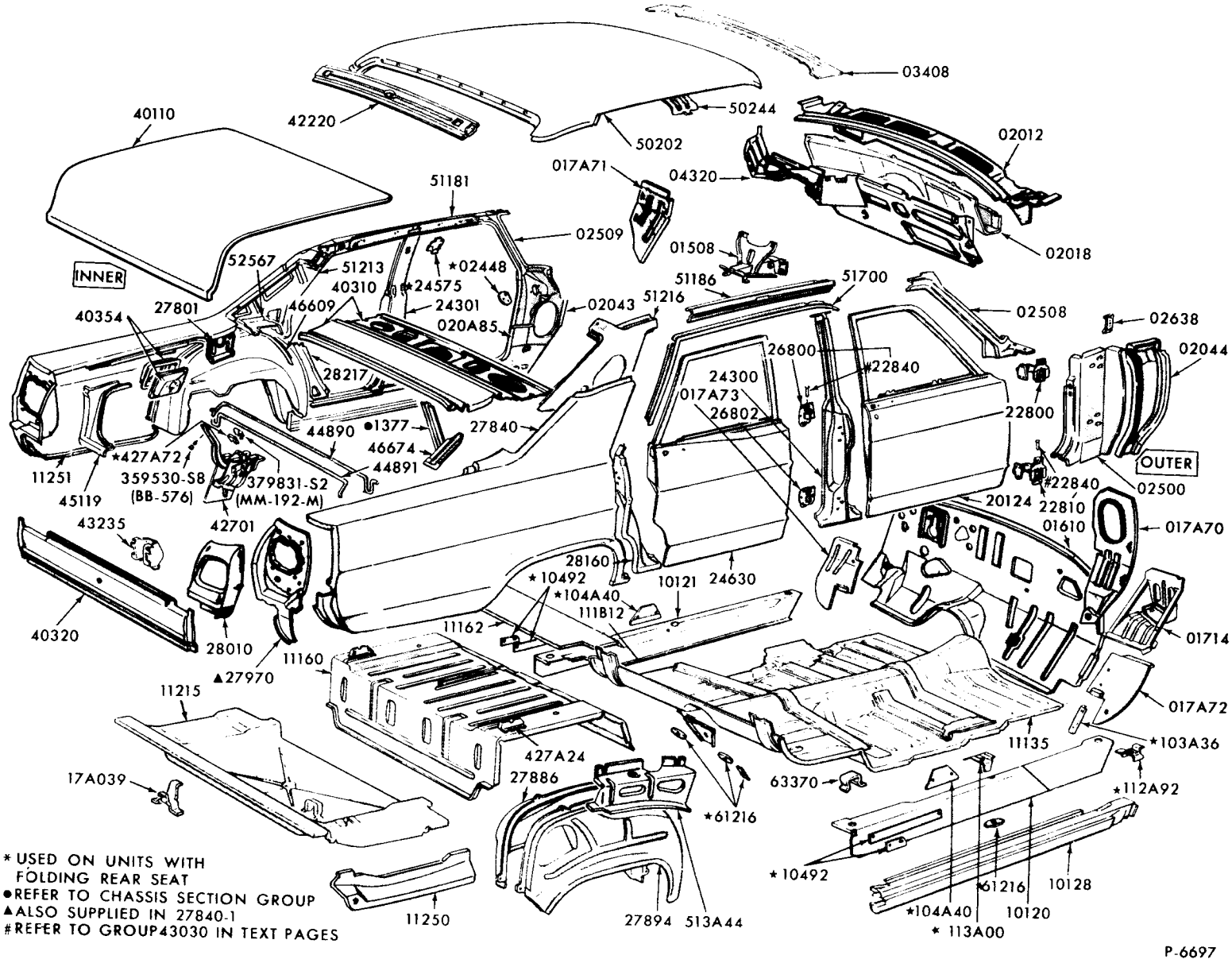
03408
50244
50202
42220
40110
02012
017A71
04320
51181
02509
01508
02018
INNER
52567
51213
*02448
40310
*24575
51186
51700
27801
46609
24301
02043
51216
02508
02638
40354
020A85
26800
02044
28217
#22840
24300
017A73
26802
22800
44890
●1377
27840
46674
*427A72
44891
OUTER
11251
359530-S8
(BB-576)
379831-S2
(MM-192-M)
#22840
22810
02500
45119
20124
01610
017A70
43235
42701
28160
*10492
10121
24630
*104A40
111B12
11162
01714
40320
28010
11160
▲27970
11215
017A72
11135
*103A36
427A24
27886
63370
*112A92
17A039
*61216
*10492
*61216
10128
*104A40
10120
11250
27894
513A44
* 113A00
* USED ON UNITS WITH FOLDING REAR SEAT
●REFER TO CHASSIS SECTION GROUP
▲ALSO SUPPLIED IN 27840-1
#REFER TO GROUP43030 IN TEXT PAGES
P-6697

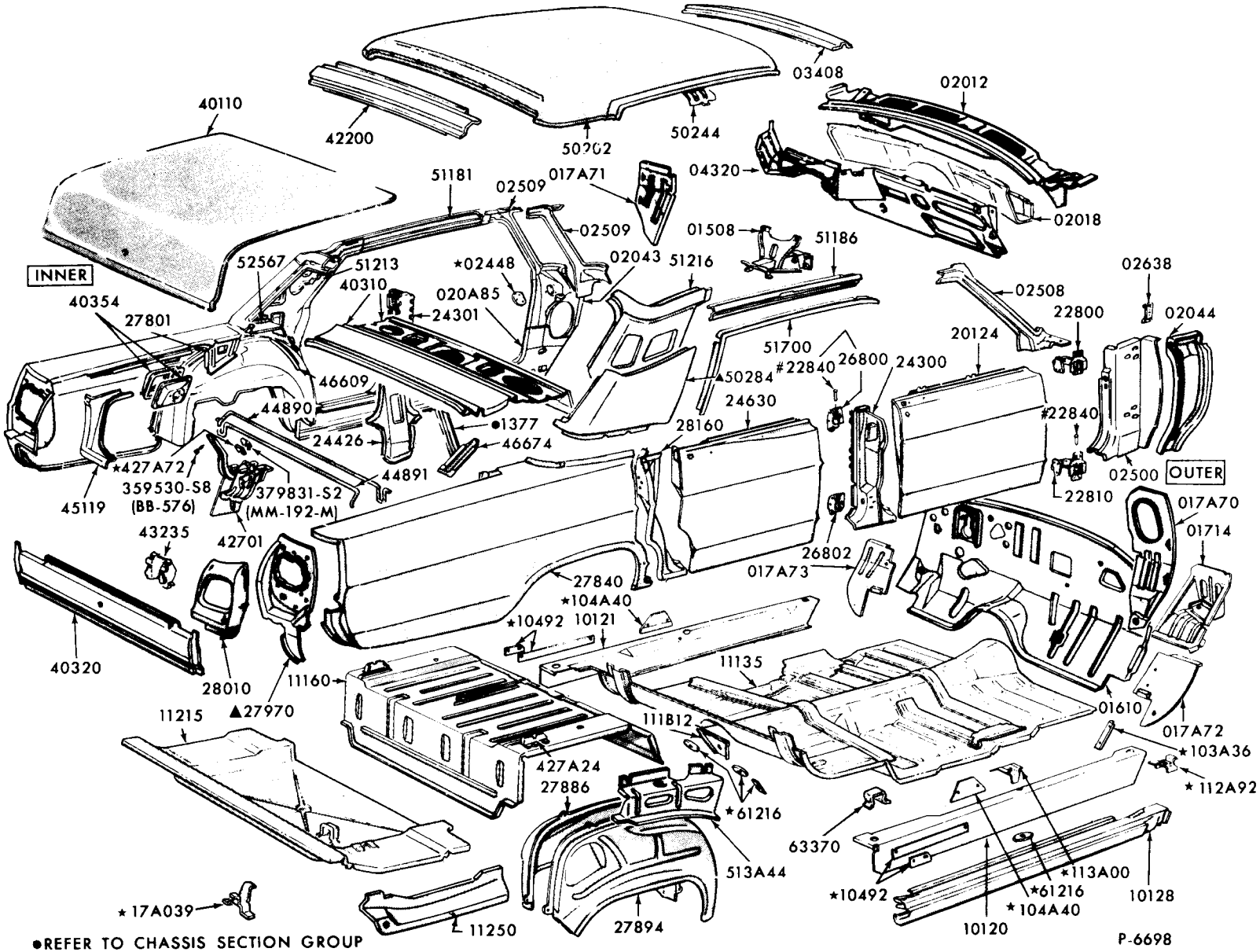


•REFER TO CHASSIS SECTION GROUP
▲ALSO SUPPLIED IN 27840-1
#REFER TO GROUP 43030 IN TEXT PAGES


COPYRIGHT © 1975— FORD MOTOR COMPANY — DEARBORN, MICHIGAN

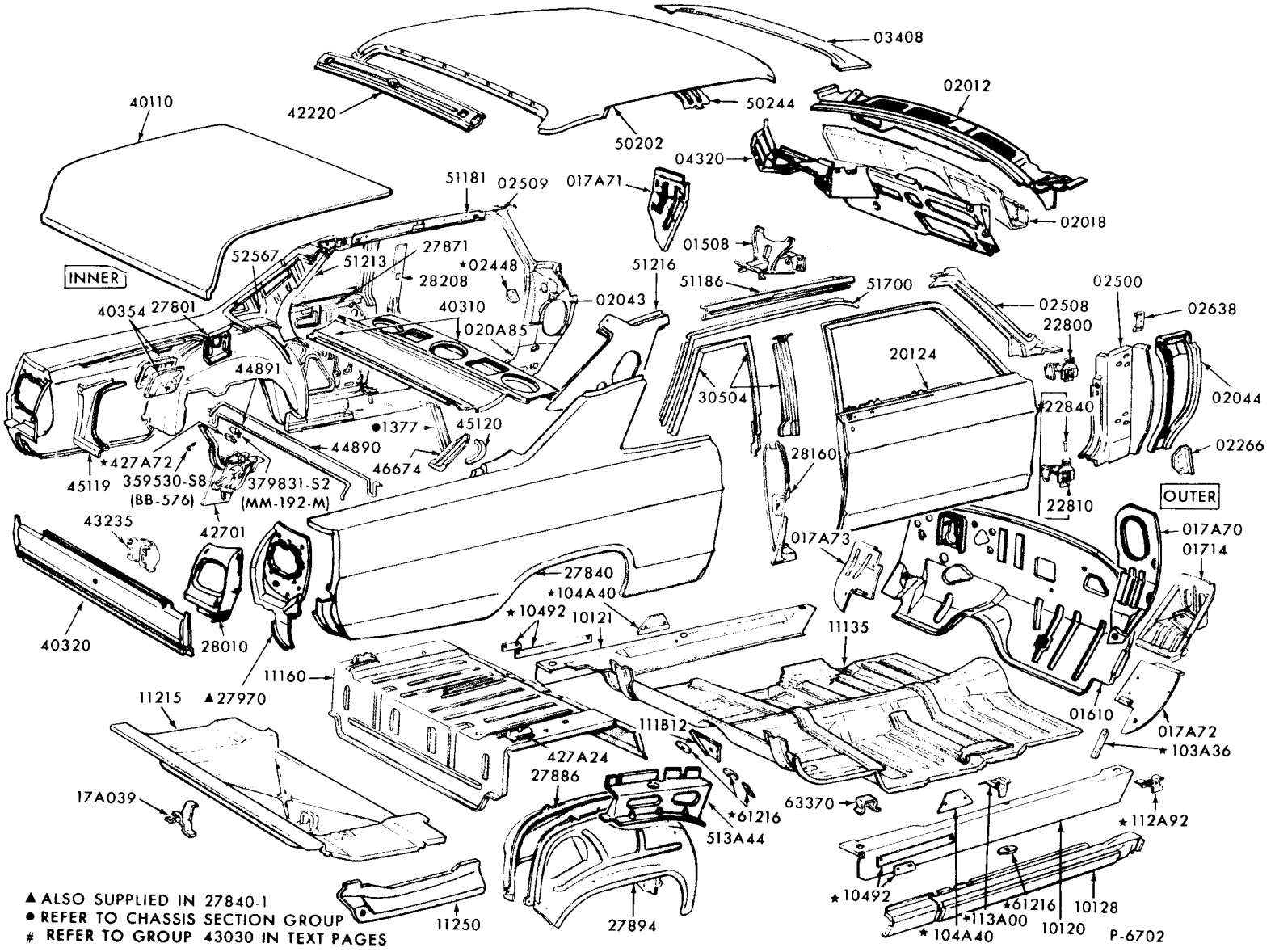


▲ ALSO SUPPLIED IN 27840-1
• REFER TO CHASSIS SECTION GROUP
# REFER TO GROUP 43030 IN TEXT PAGES

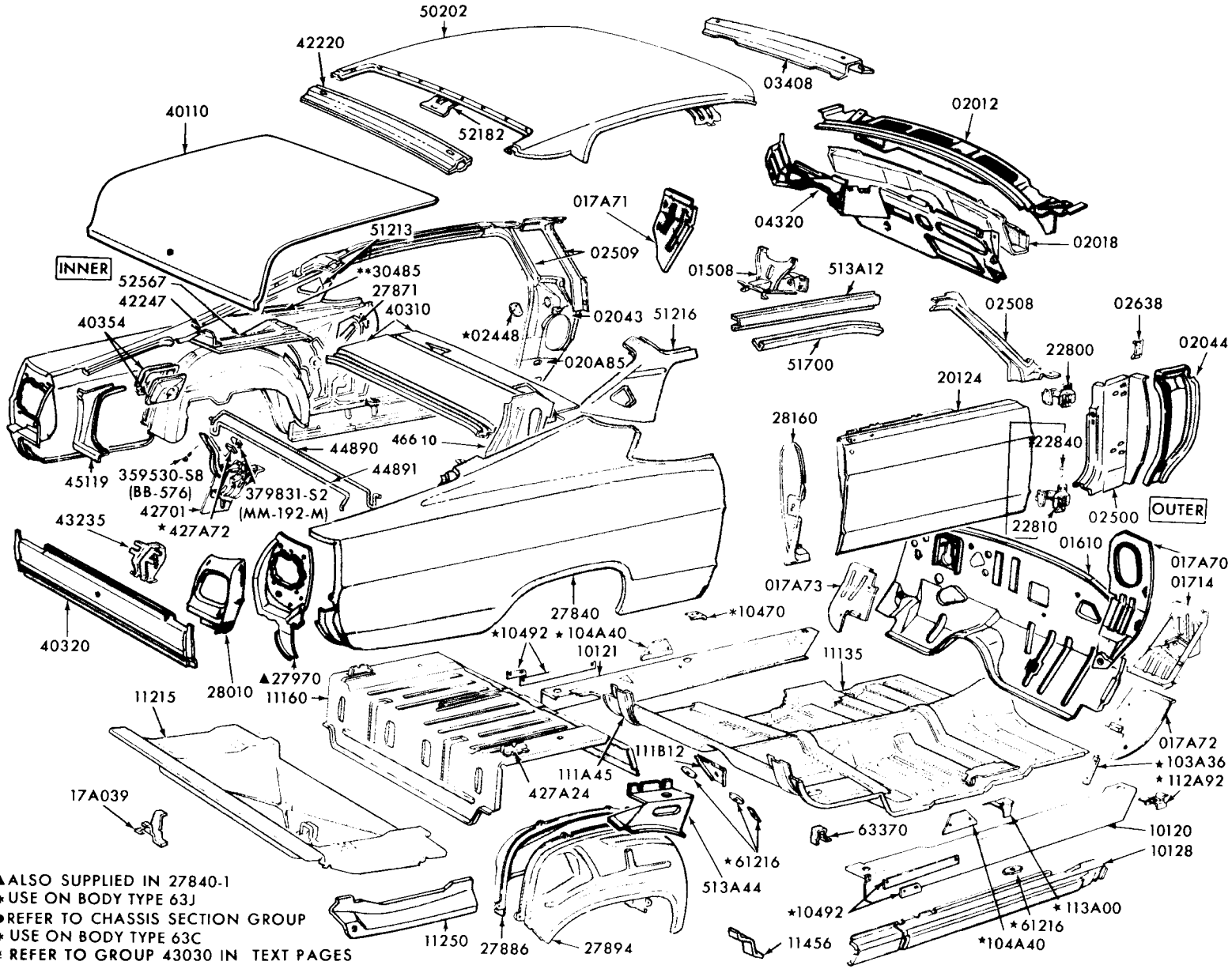


▲ALSO SUPPLIED IN 27840-1
** USE ON BODY TYPE 63J
● REFER TO CHASSIS SECTION GROUP
* USE ON BODY TYPE 63C
# REFER TO GROUP 43030 IN TEXT PAGES

P-6703


COPYRIGHT © 1975 — FORD MOTOR COMPANY — DEARBORN, MICHIGAN

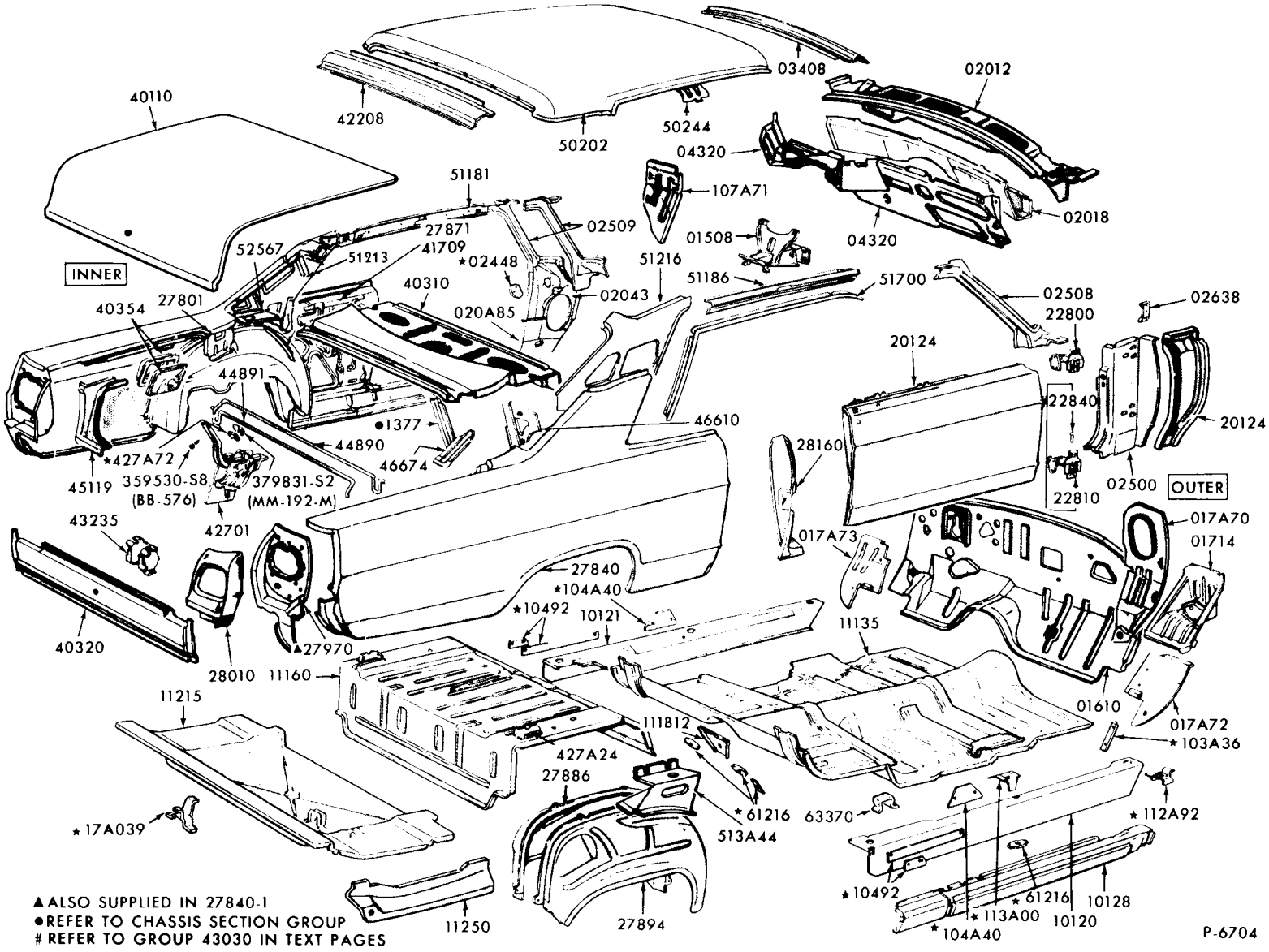


▲ALSO SUPPLIED IN 27840-1
•REFER TO CHASSIS SECTION GROUP
# REFER TO GROUP 43030 IN TEXT PAGES

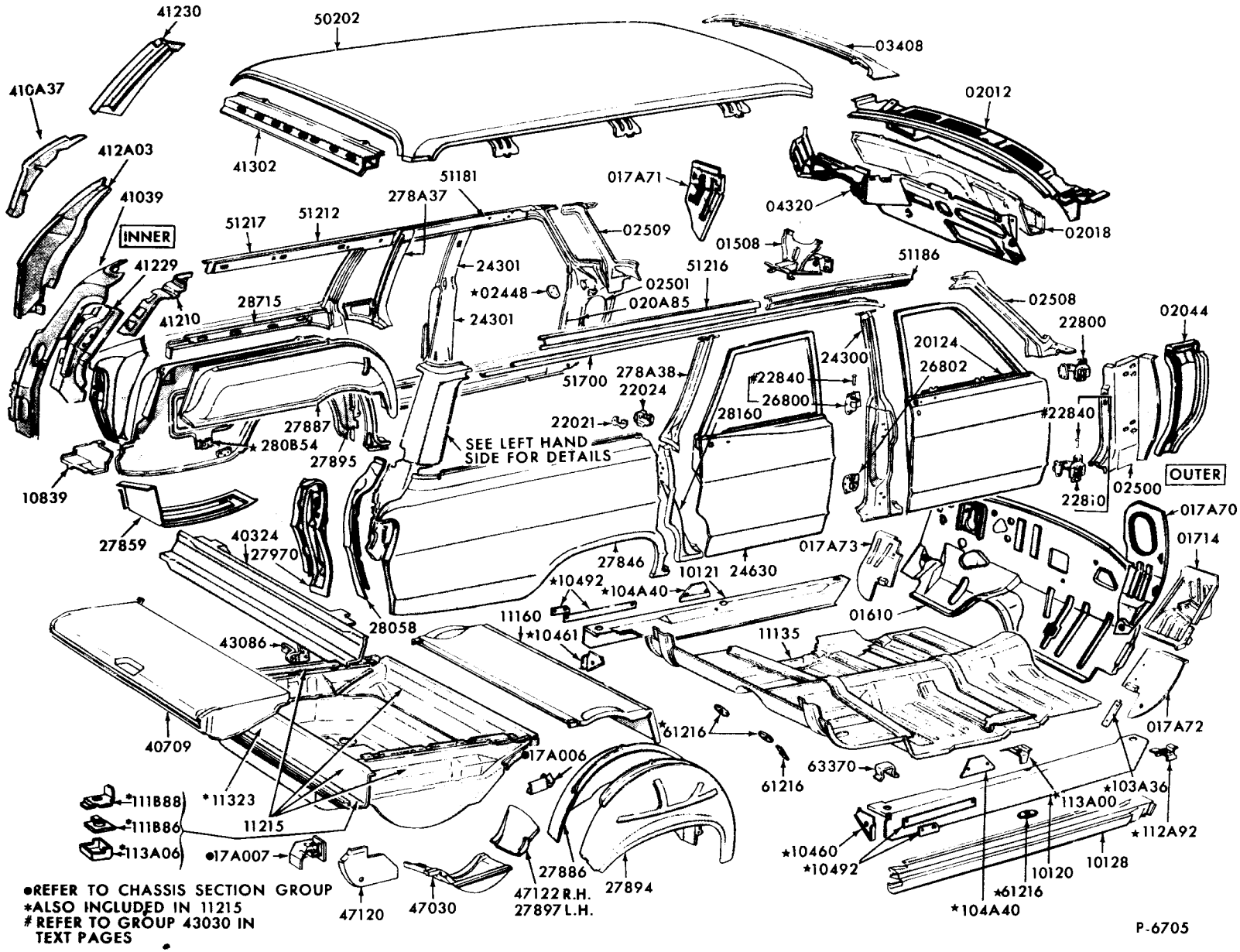


●REFER TO CHASSIS SECTION GROUP
*ALSO INCLUDED IN 11215
# REFER TO GROUP 43030 IN TEXT PAGES


COPYRIGHT © 1975 — FORD MOTOR COMPANY — DEARBORN, MICHIGAN

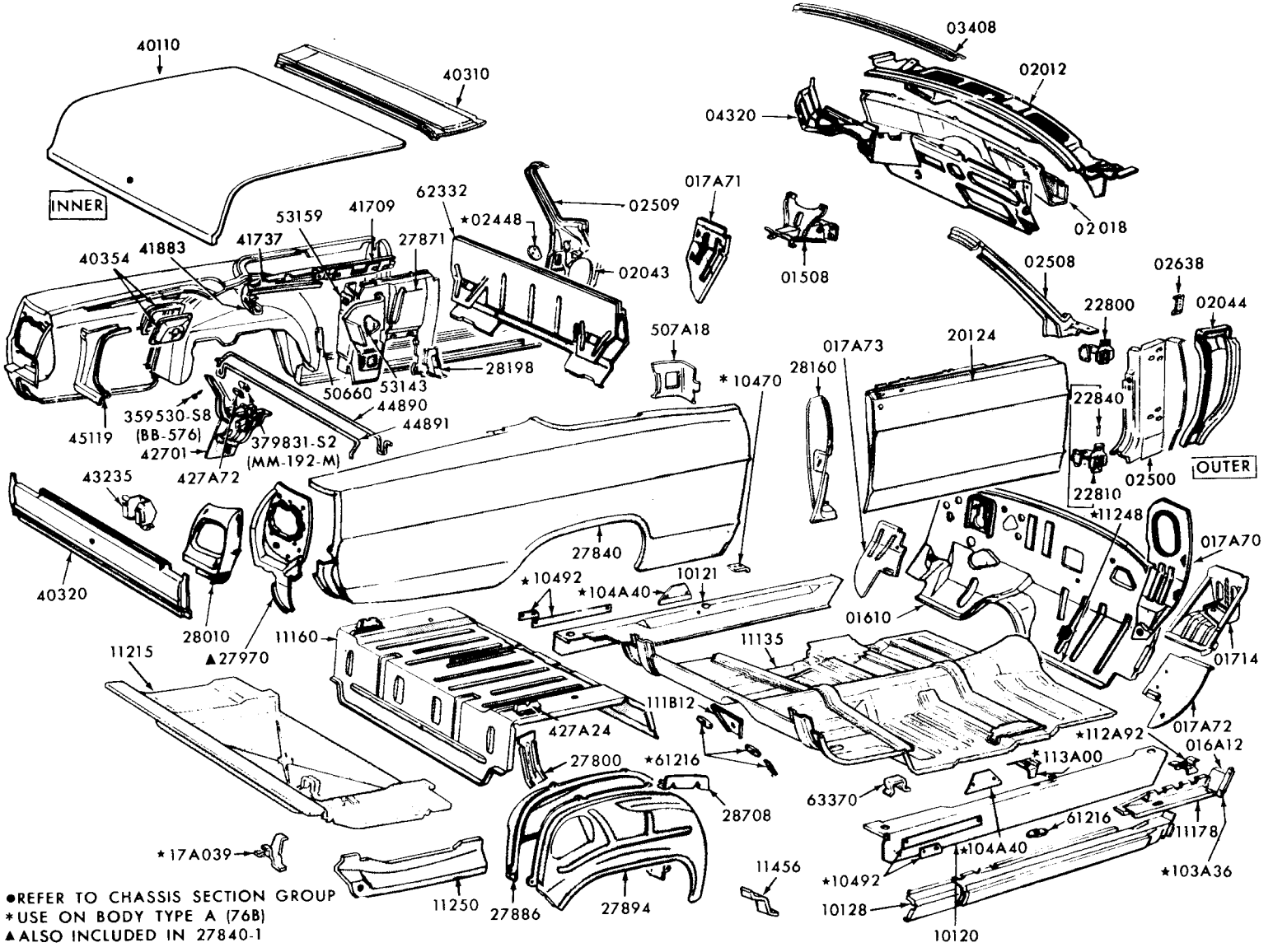


●REFER TO CHASSIS SECTION GROUP
*USE ON BODY TYPE A (76B)
▲ALSO INCLUDED IN 27840-1

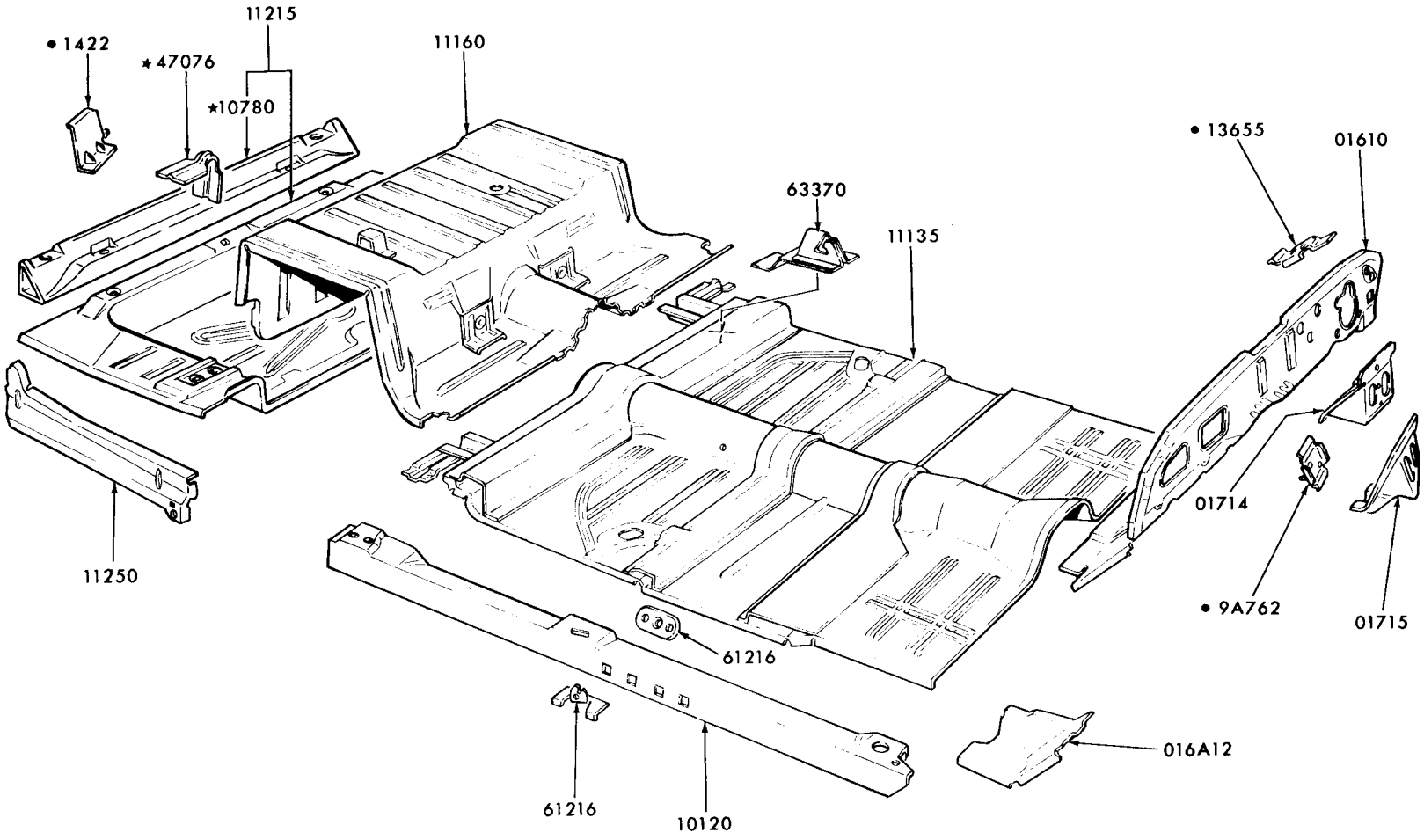


•REFER TO CHASSIS SECTION

P-7989



COPYRIGHT © 1975 — FORD MOTOR COMPANY — DEARBORN, MICHIGAN

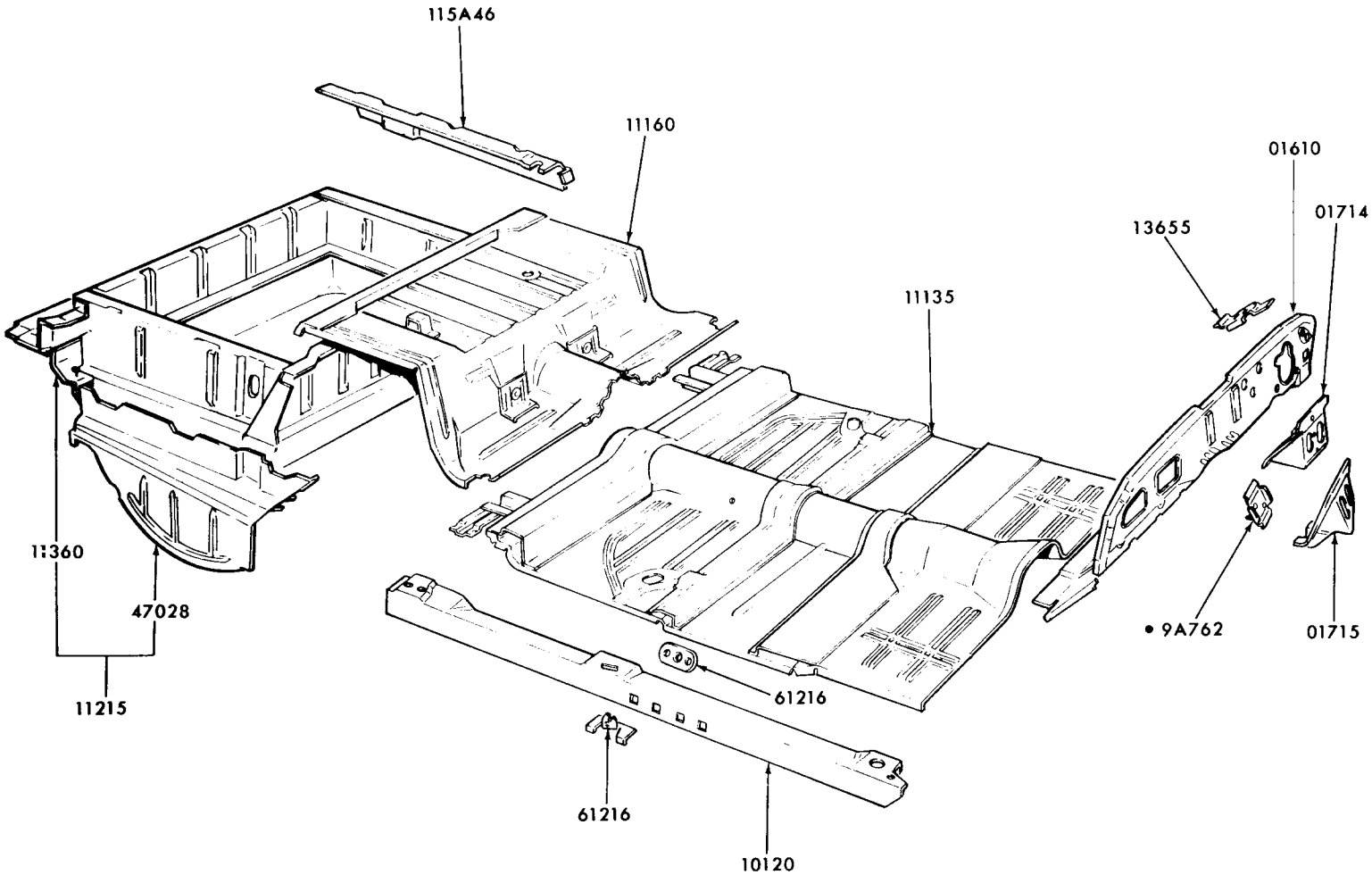


• REFER TO CHASSIS SECTION

P-7990

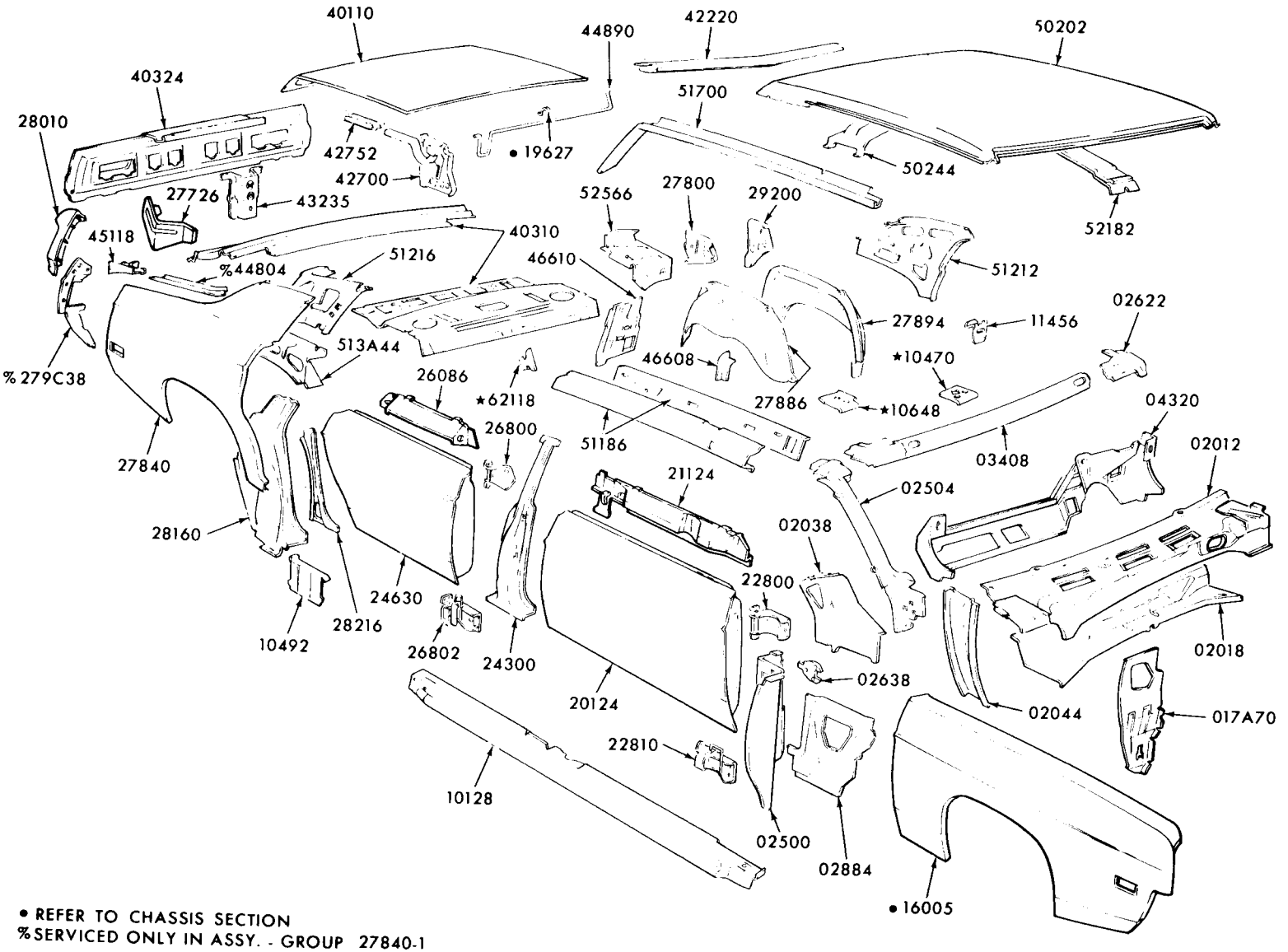


• REFER TO CHASSIS SECTION
%SERVICED ONLY IN ASSY. - GROUP 27840-1

P-7993


COPYRIGHT © 1975 — FORD MOTOR COMPANY — DEARBORN, MICHIGAN

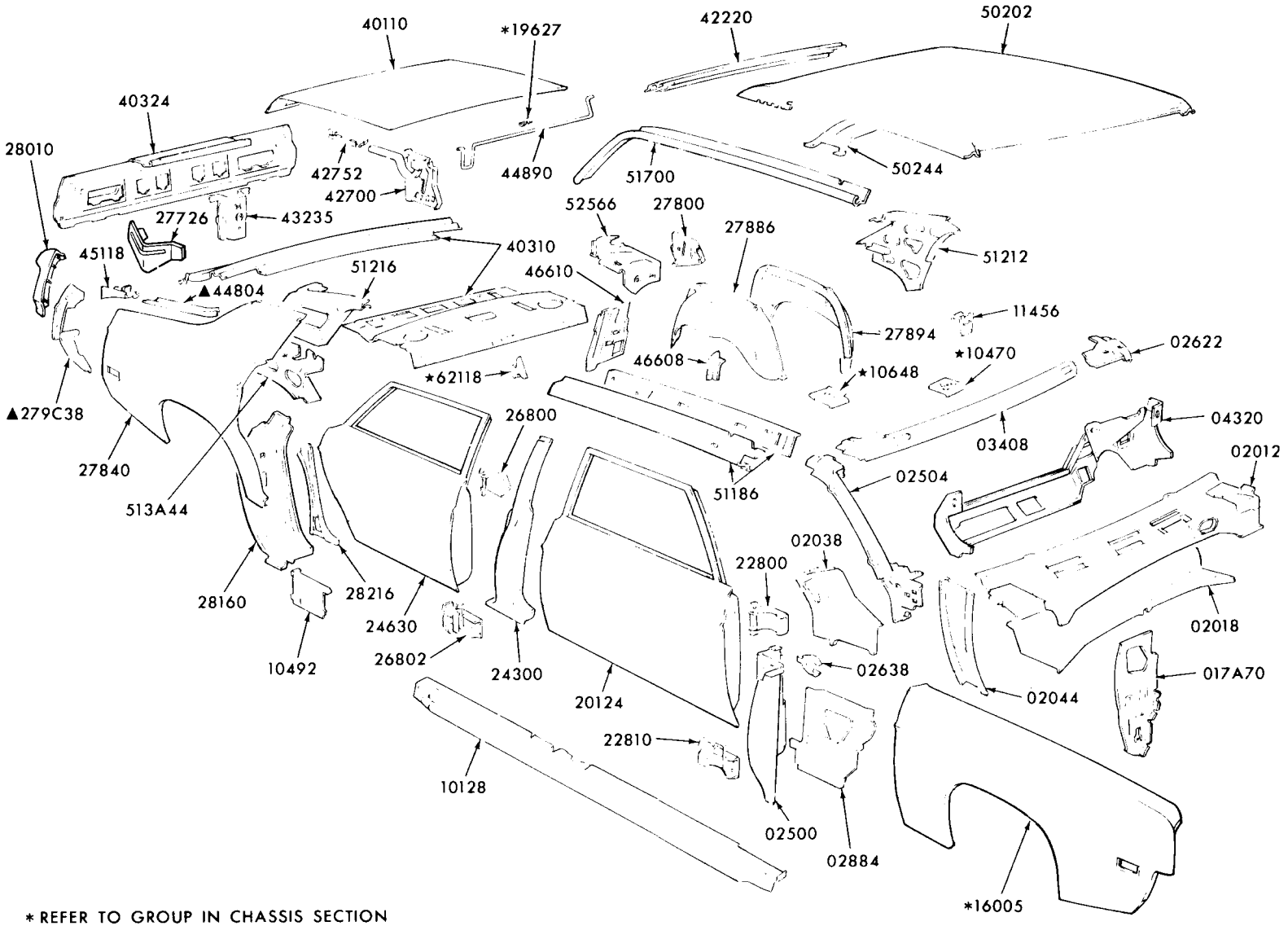


* REFER TO GROUP IN CHASSIS SECTION
▲SUPPLIED ONLY IN ASSEMBLY-GROUP 27840-1

P-7994

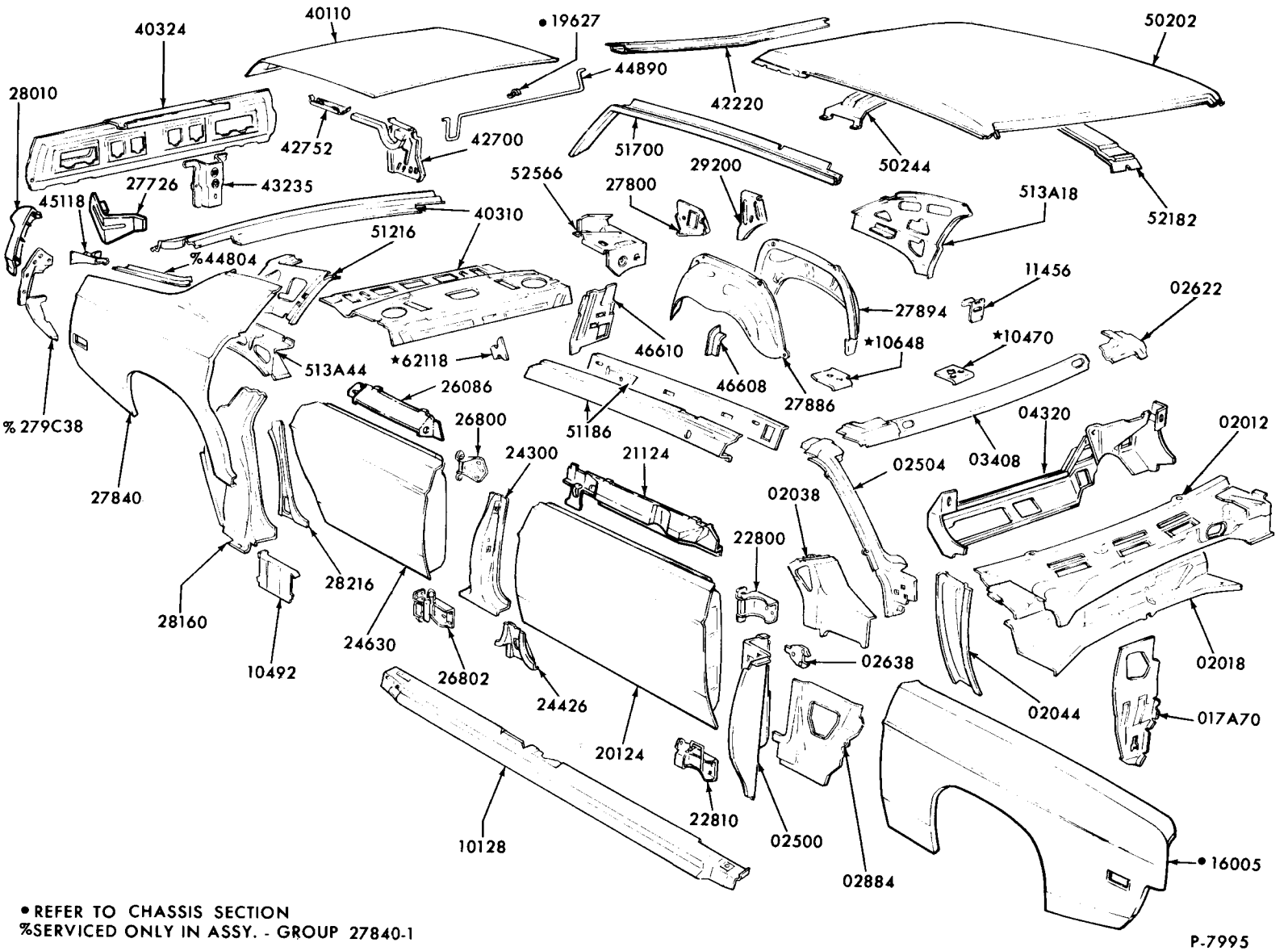


• REFER TO CHASSIS SECTION
%SERVICED ONLY IN ASSY. - GROUP 27840-1


COPYRIGHT © 1975 — FORD MOTOR COMPANY — DEARBORN, MICHIGAN

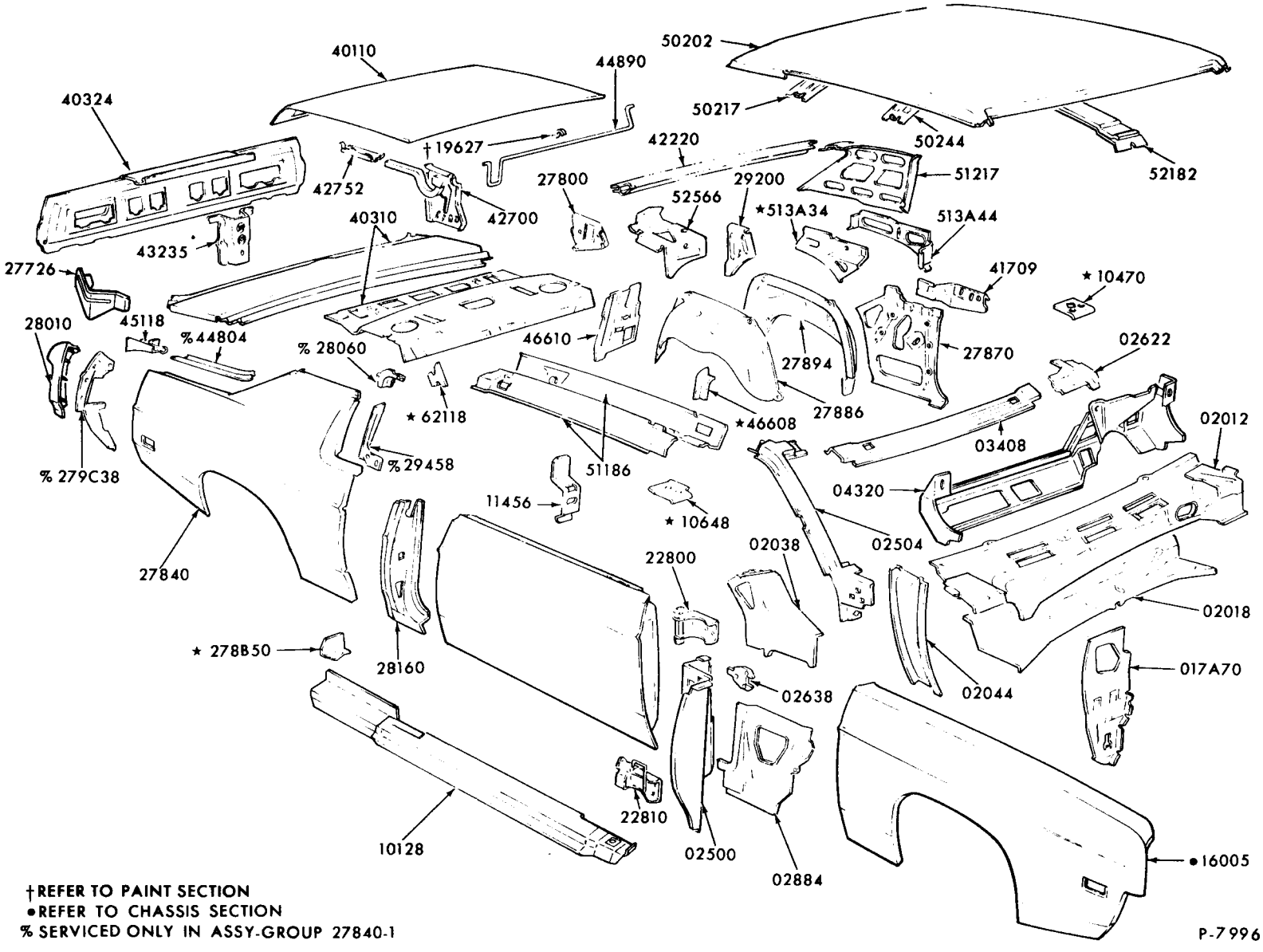


†REFER TO PAINT SECTION
•REFER TO CHASSIS SECTION
% SERVICED ONLY IN ASSY-GROUP 27840-1

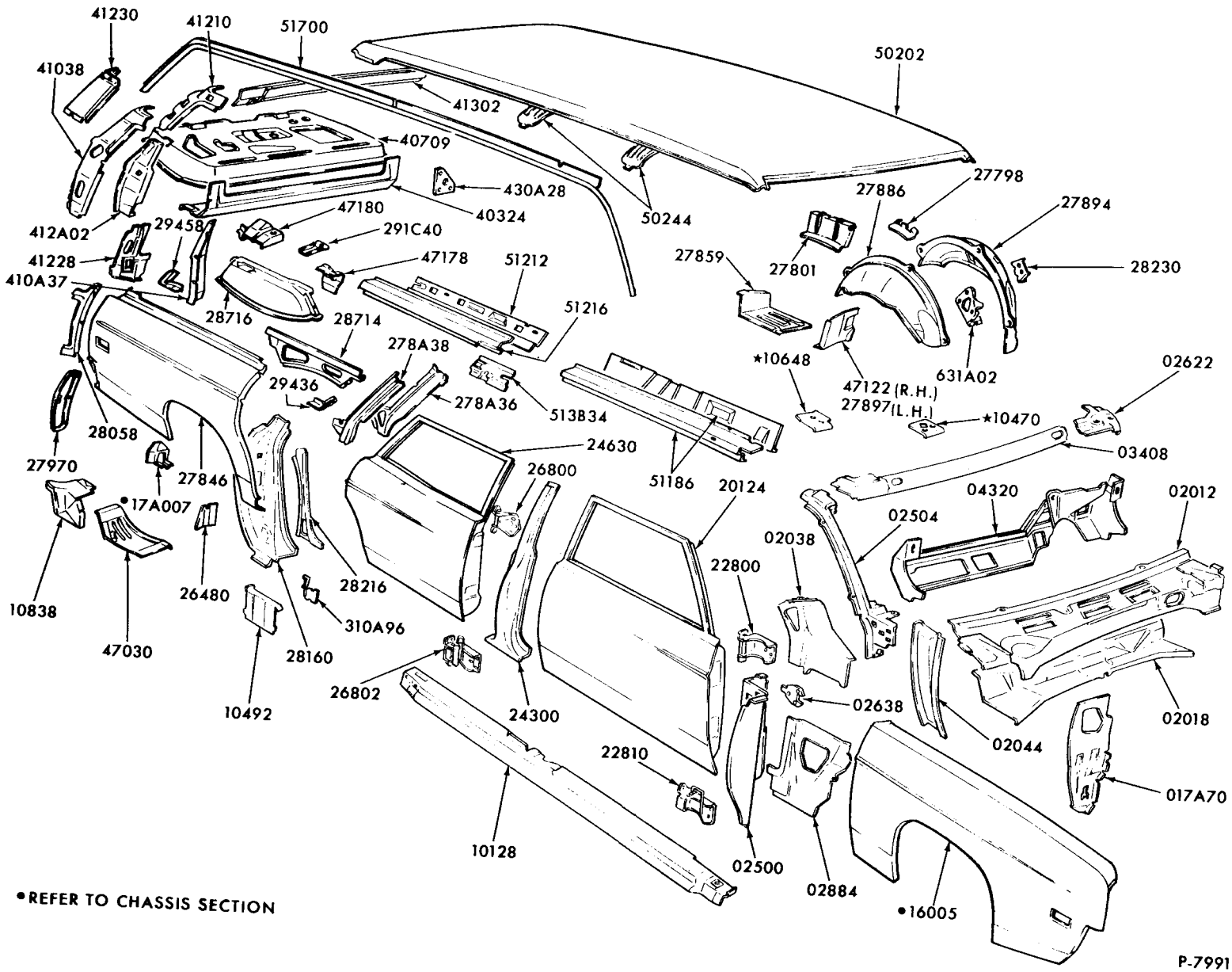


•REFER TO CHASSIS SECTION


COPYRIGHT © 1975 — FORD MOTOR COMPANY — DEARBORN, MICHIGAN

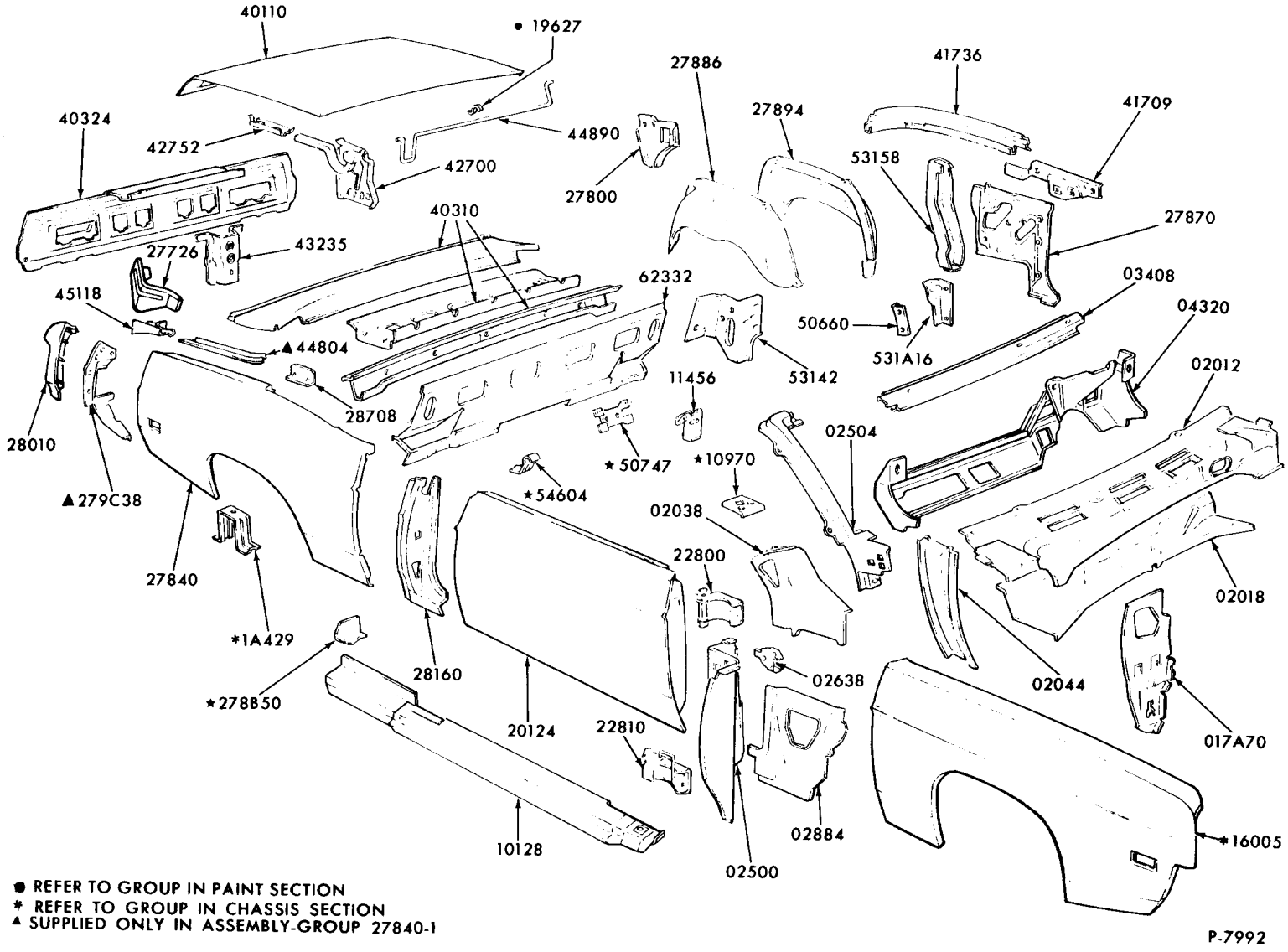


● REFER TO GROUP IN PAINT SECTION
* REFER TO GROUP IN CHASSIS SECTION
▲ SUPPLIED ONLY IN ASSEMBLY-GROUP 27840-1

P-7992

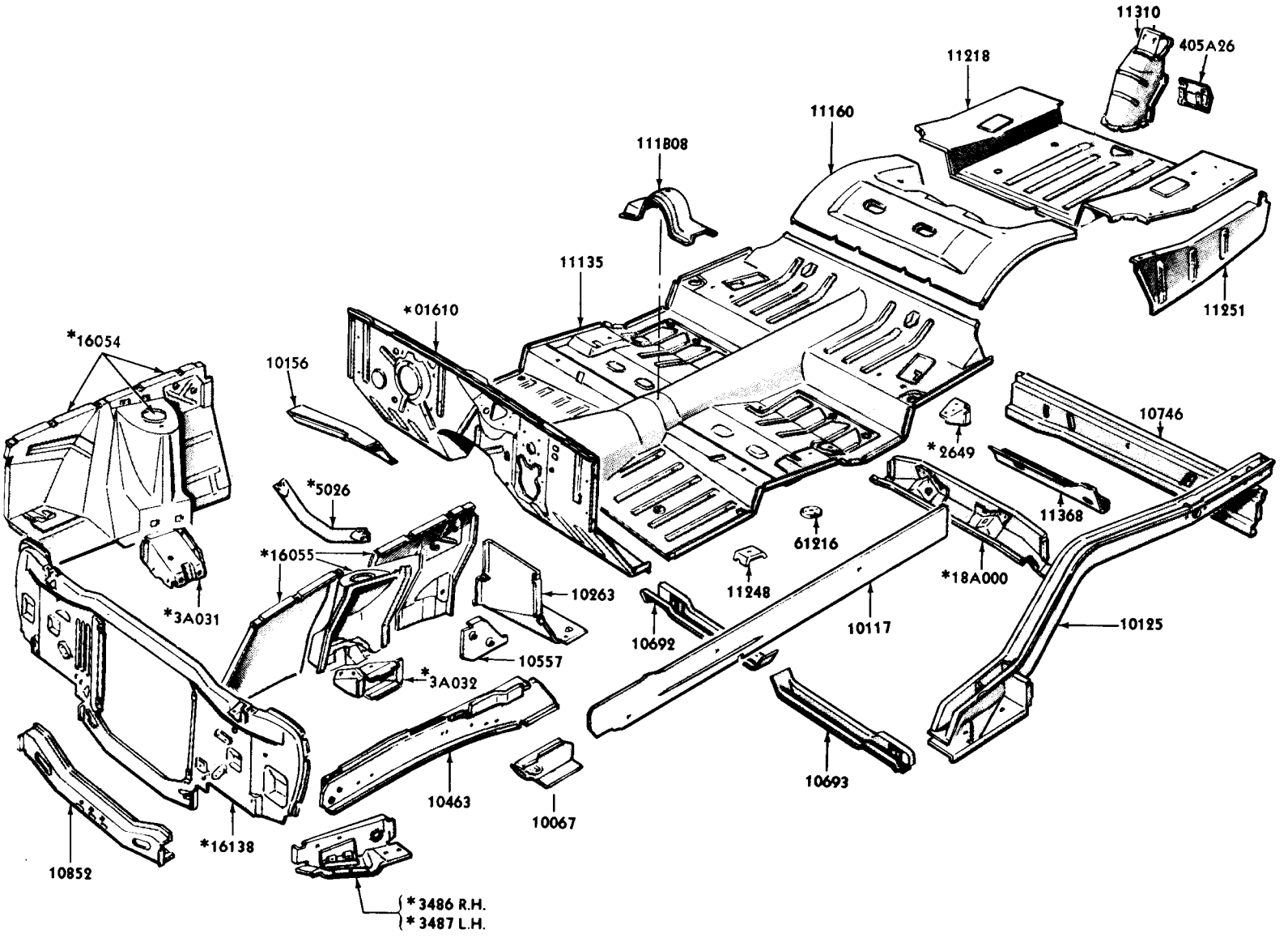


*REFER TO GROUP IN CHASSIS SECTION

P-4638

1965 FAIRLANE - BODY TYPES 54, 62, 65 - UNDER BODY



COPYRIGHT © 1975 — FORD MOTOR COMPANY — DEARBORN, MICHIGAN

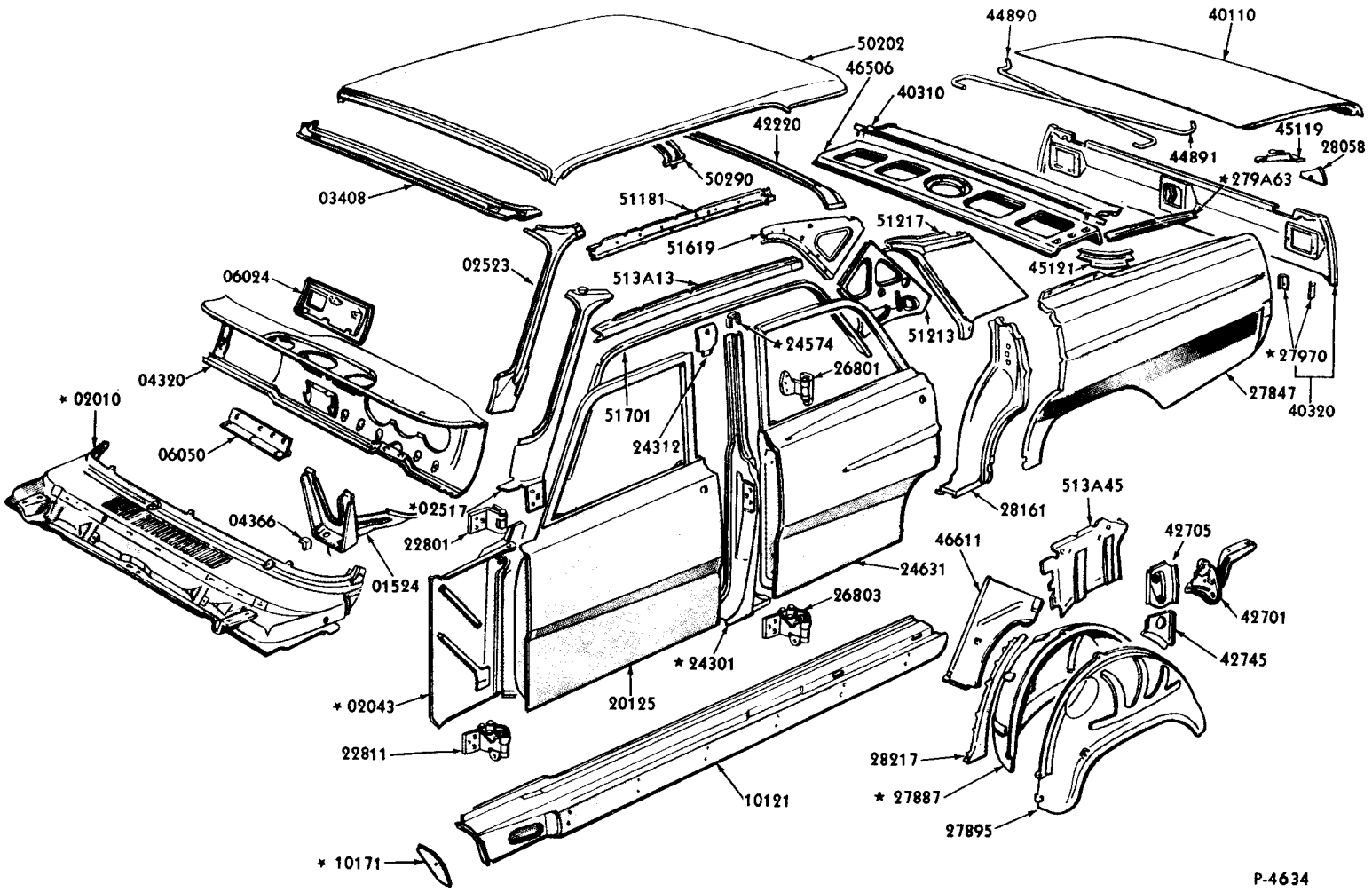
50202
46506
40310
44890
40110
42220
45119
28058
44891
*279A63
50290
03408
51181
51217
51619
45121
02523
513A13
06024
51213
*24574
*27970
26801
04320
27847
40320
* 02010
51701
24312
06050
513A45
28161
*02517
04366
22801
42705
46611
01524
24631
26803
42701
42745
* 24301
20125
* 02043
22811
28217
10121
* 27887
27895
* 10171
P-4634

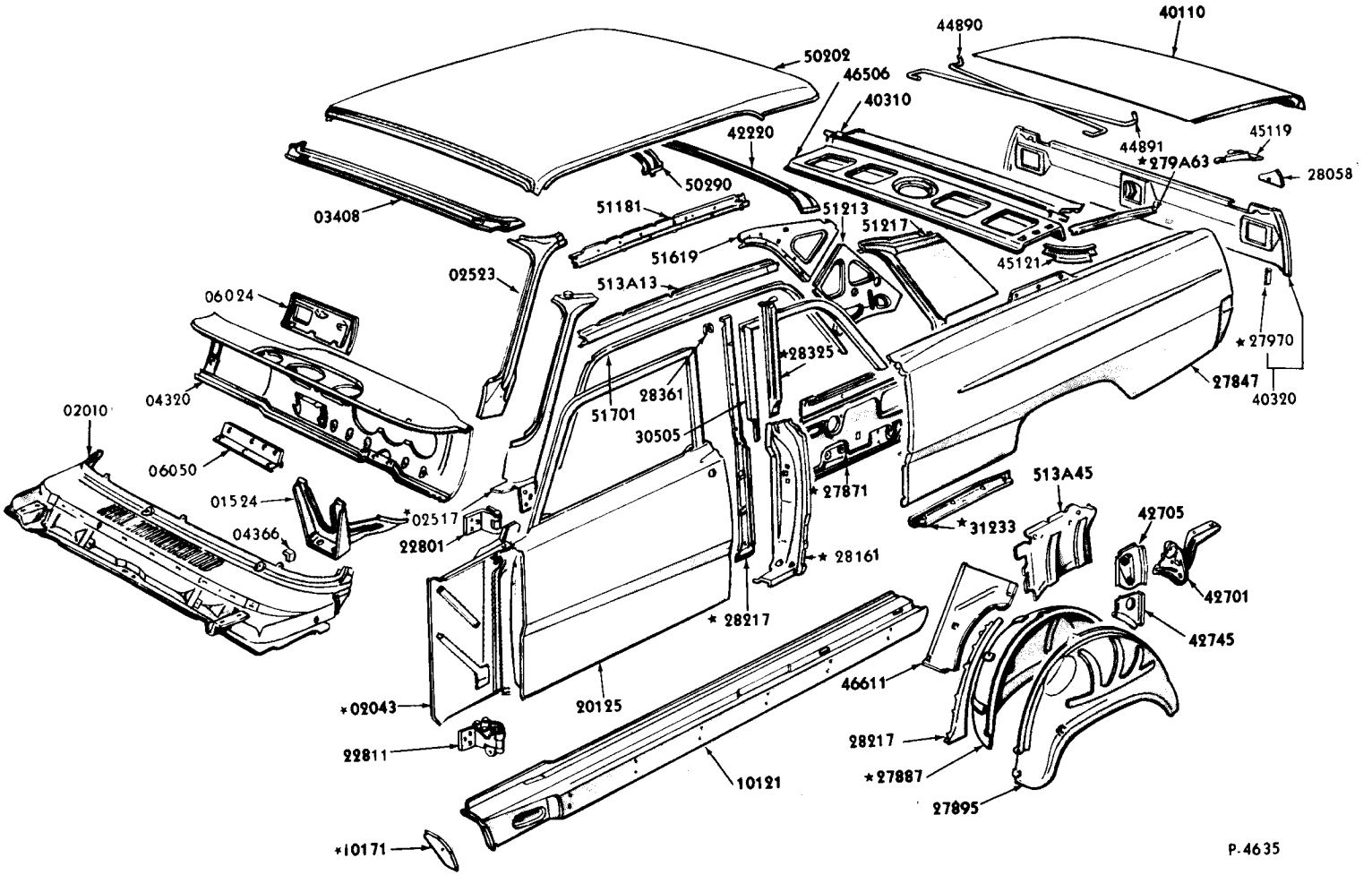


1965 FAIRLANE - BODY TYPE 62 - UPPER BODY



COPYRIGHT © 1975 — FORD MOTOR COMPANY — DEARBORN, MICHIGAN

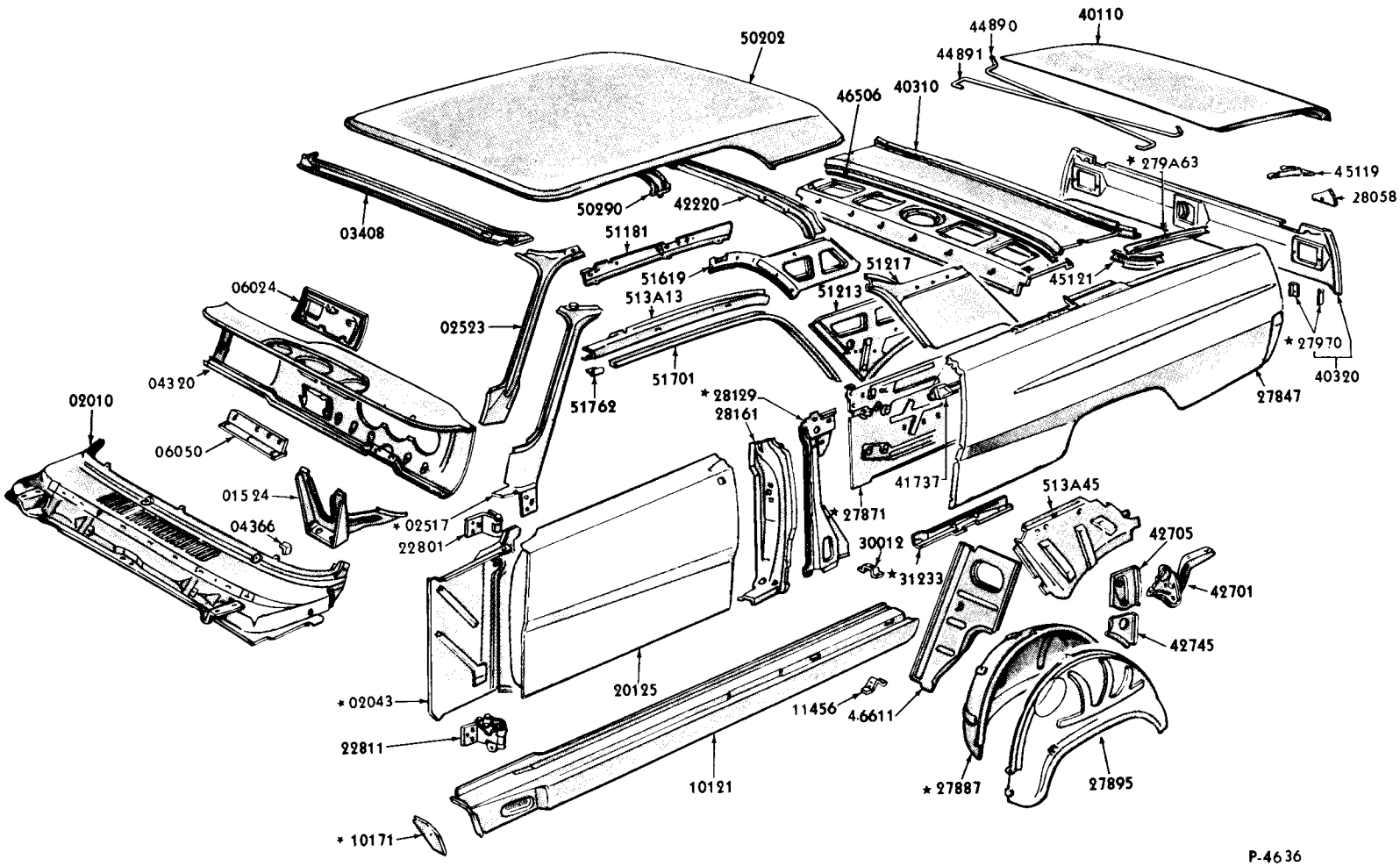
50202
44890
40110
44891
46506
40310
* 279A63
45119
28058
50290
42220
03408
51181
51619
51217
45121
06024
513A13
51213
02523
* 27970
40320
04320
51701
51762
* 28129
28161
27847
02010
06050
41737
513A45
01524
* 02517
04366
22801
* 27871
30012
42705
* 31233
42701
42745
20125
* 02043
11456
4.6611
22811
10121
* 27887
27895
* 10171
P-4636

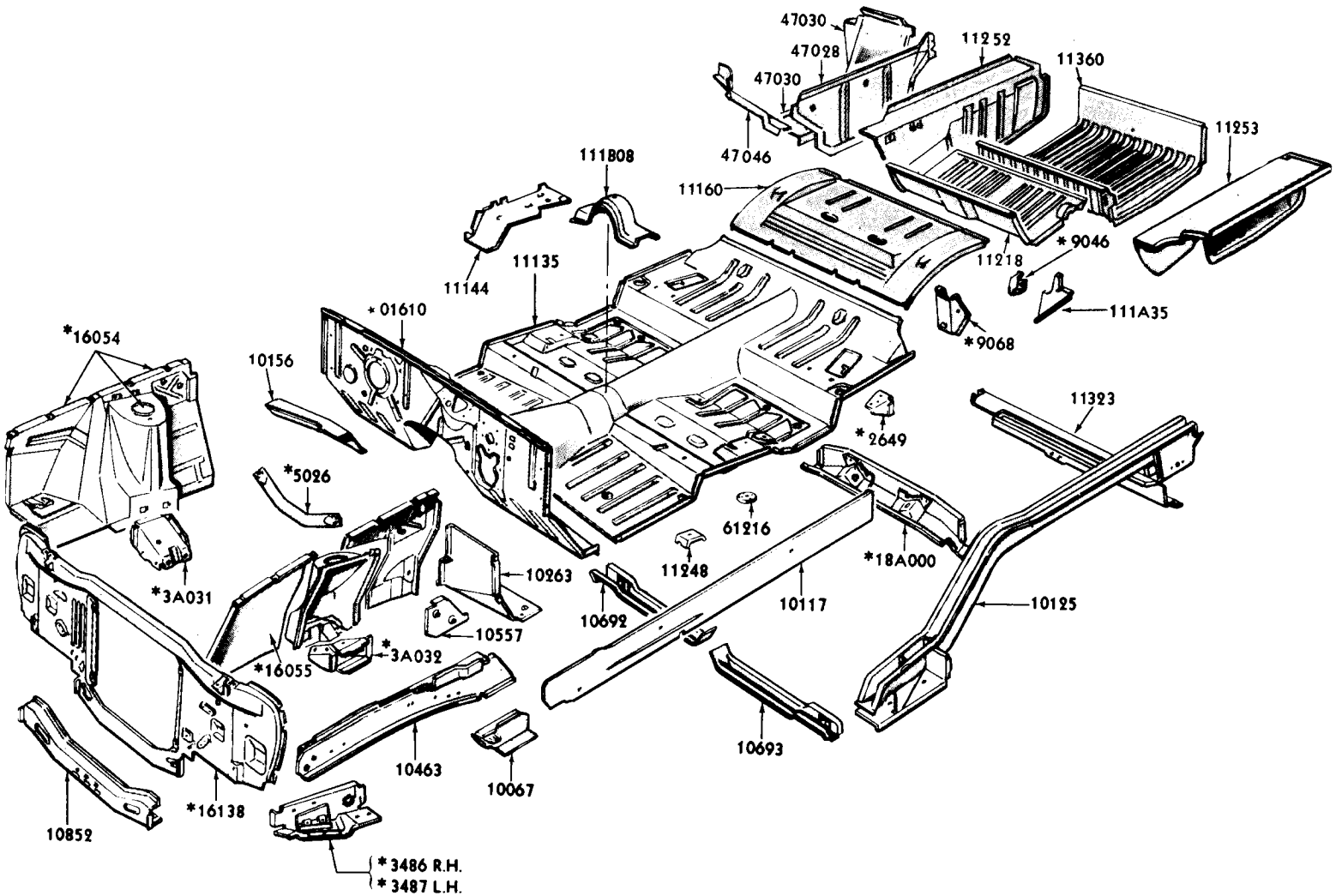


*REFER TO GROUP IN CHASSIS SECTION

P-4639


COPYRIGHT © 1975 — FORD MOTOR COMPANY — DEARBORN, MICHIGAN

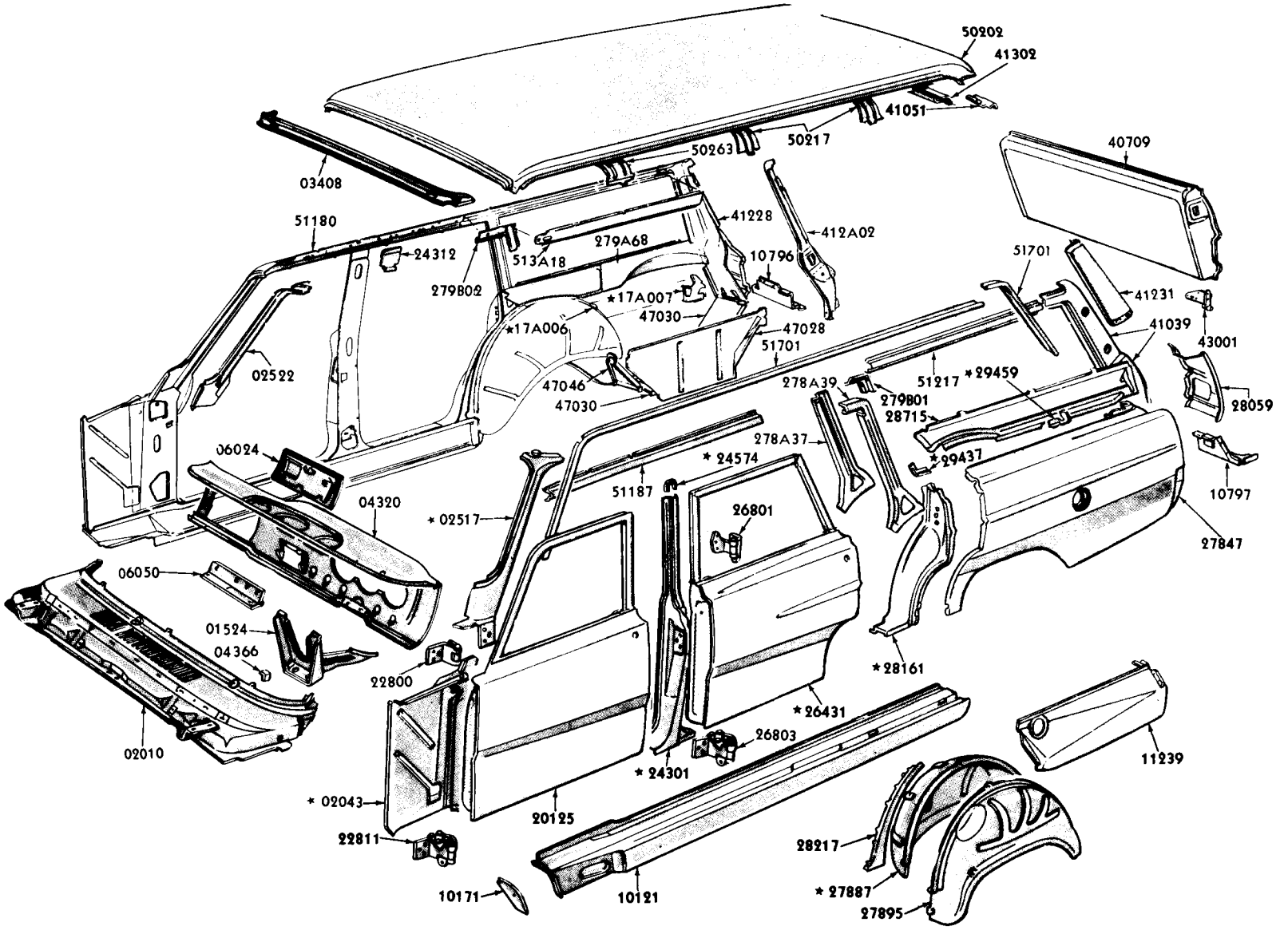
50202
41302
41051
50217
50263
40709
03408
51180
41228
412A02
279A68
24312
513A18
10796
51701
279802
*17A007
41231
47030
41039
*17A006
47028
43001
51701
02522
47046
278A39
51217
*29459
47030
279B01
28059
28715
06024
278A37
*24574
*29437
51187
10797
04320
*02517
26801
27847
06050
01524
04366
22800
*28161
*26431
26803
02010
*24301
11239
*02043
20125
22811
28217
10171
10121
*27887
27895

P-4637

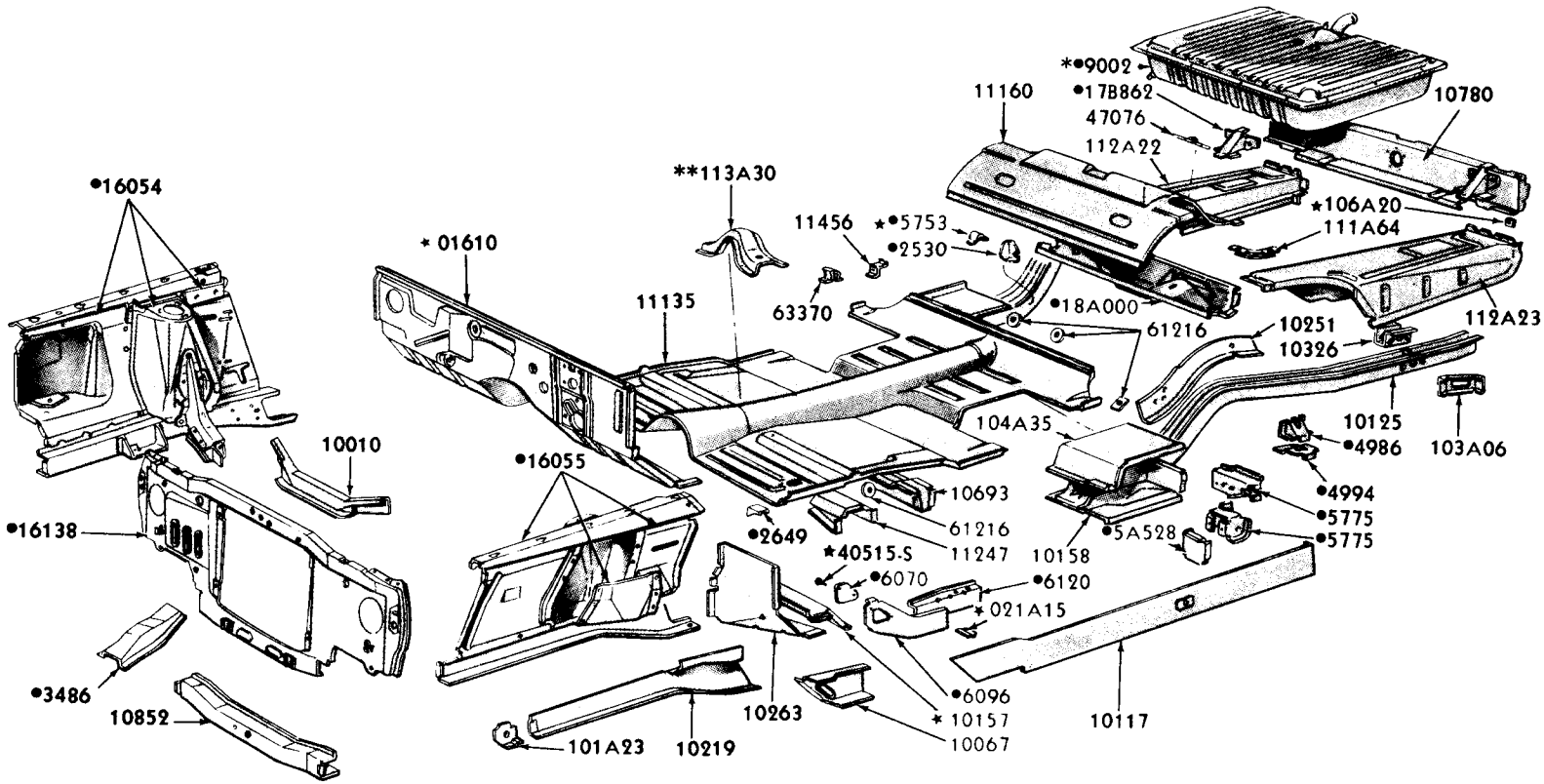


•REFER TO GROUP IN CHASSIS SECTION
*NOT PART OF UNDERBODY
**USED ON B(63C, 63D) ONLY

P-5023


COPYRIGHT © 1975 — FORD MOTOR COMPANY — DEARBORN, MICHIGAN

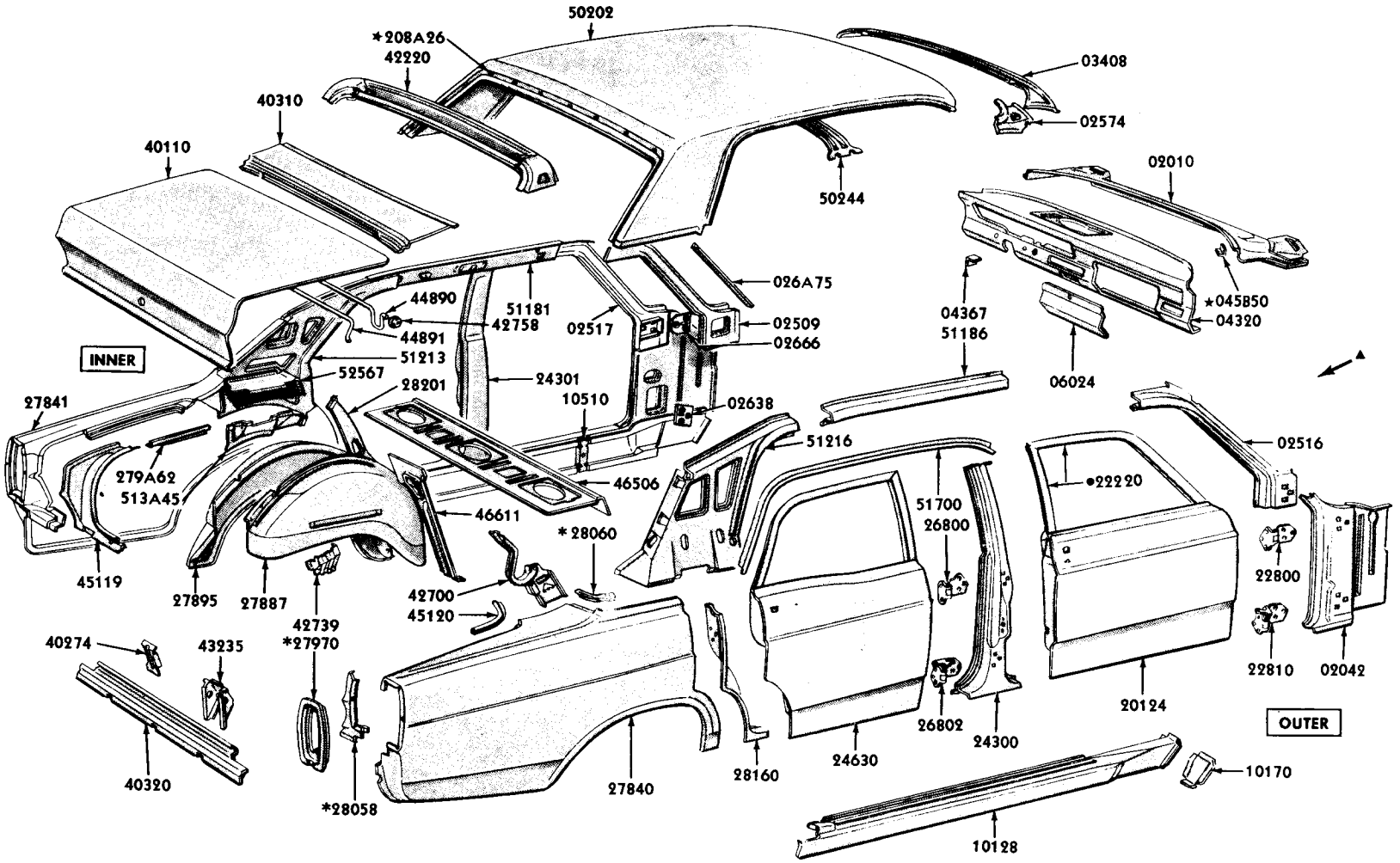


*ALSO INCLUDED IN 27840-1
▲FOR FRONT BODY PARTS REFER TO UNDERBODY ILLUSTRATION
• ALSO INCLUDED IN 20124-5

P-5018


COPYRIGHT © 1975 — FORD MOTOR COMPANY — DEARBORN, MICHIGAN

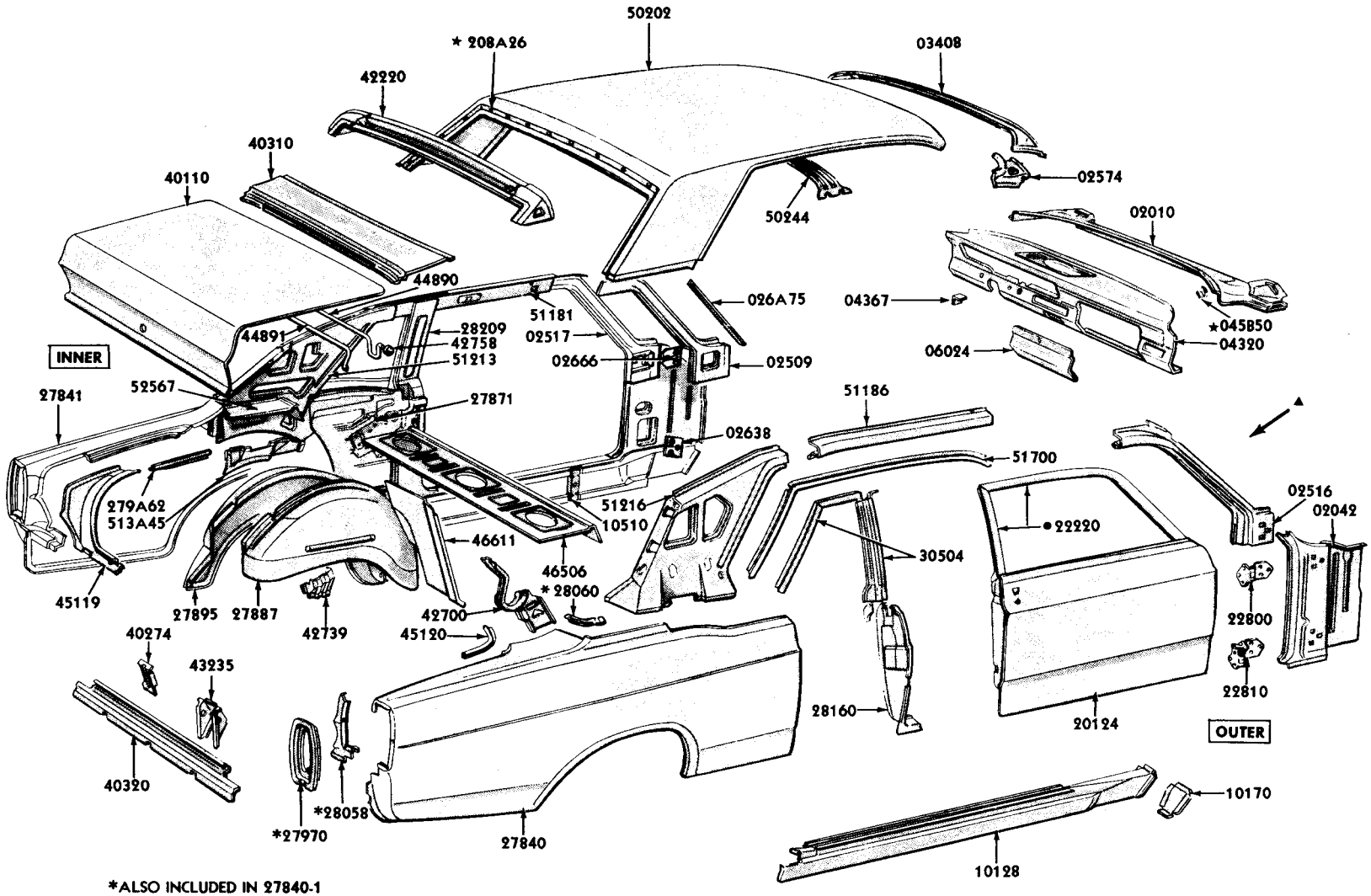


*ALSO INCLUDED IN 27840-1
▲FOR FRONT BODY PARTS REFER TO UNDERBODY ILLUSTRATION
• ALSO INCLUDED IN 20124-5

P-5019


COPYRIGHT © 1975 — FORD MOTOR COMPANY — DEARBORN, MICHIGAN

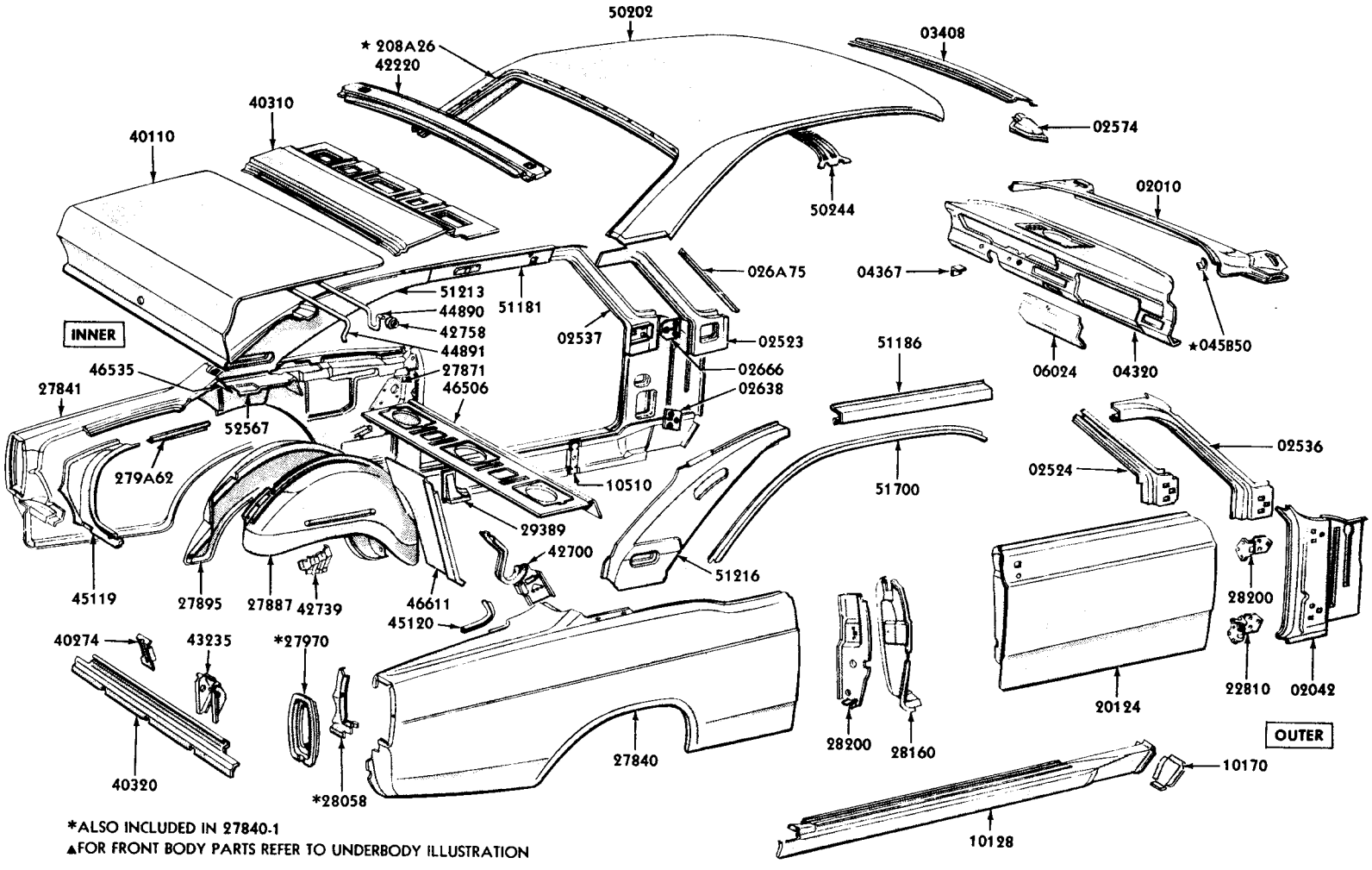
50202
* 208A26
42220
03408
40310
40110
02574
50244
02010
026A75
04367
51213
44890
51181
42758
44891
02537
02523
51186
★045B50
INNER
46535
27871
02666
06024
04320
27841
46506
02638
52567
02536
279A62
10510
02524
51700
29389
42700
51216
28200
45119
27895
27887
42739
46611
45120
40274
43235
*27970
22810
02042
20124
OUTER
28200
28160
27840
10170
40320
*28058
10128
*ALSO INCLUDED IN 27840-1
▲FOR FRONT BODY PARTS REFER TO UNDERBODY ILLUSTRATION
P-5020

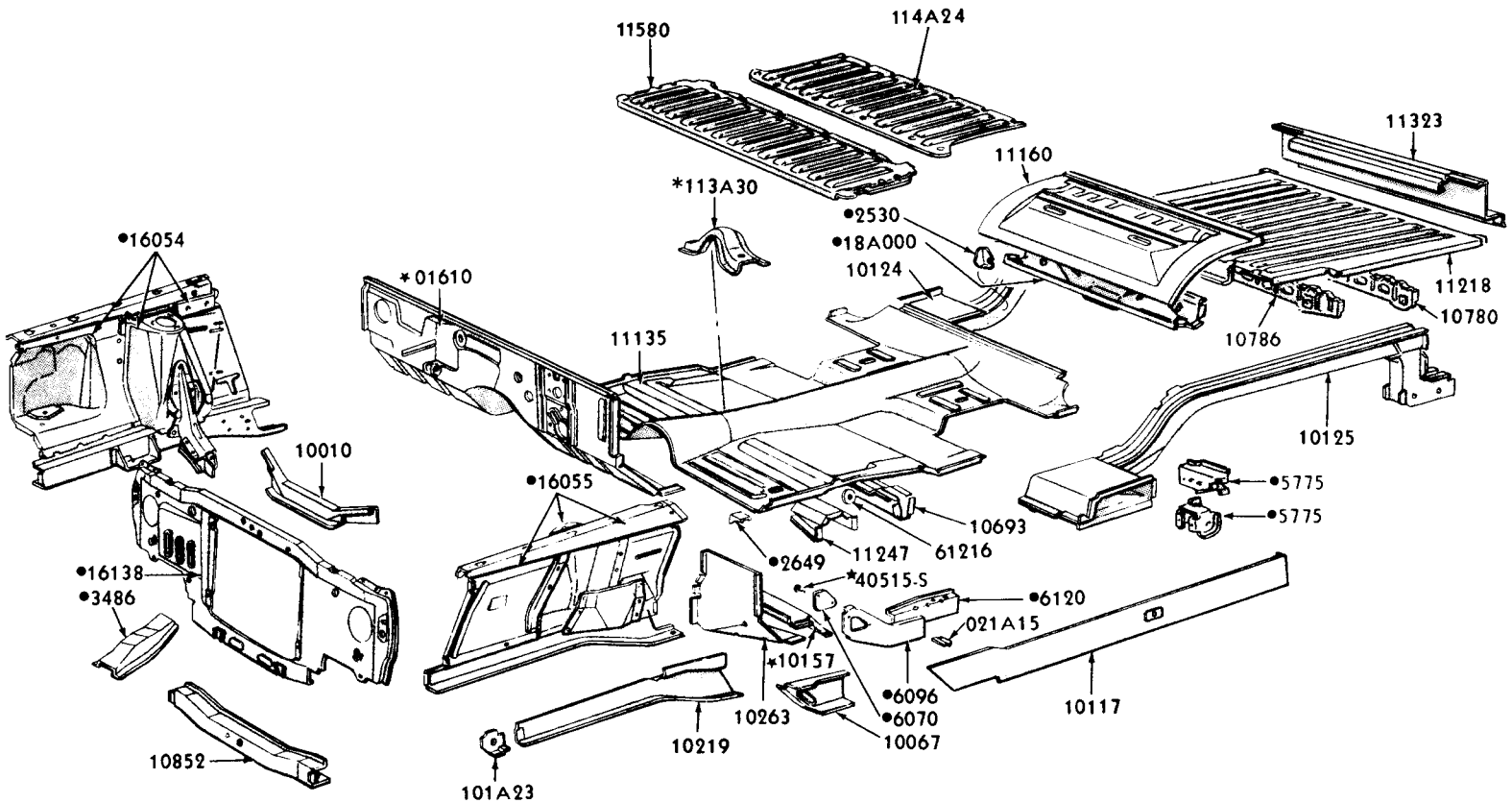


•REFER TO GROUP IN CHASSIS SECTION
*USED ON (66D) ONLY

P-5031


COPYRIGHT © 1975 — FORD MOTOR COMPANY — DEARBORN, MICHIGAN

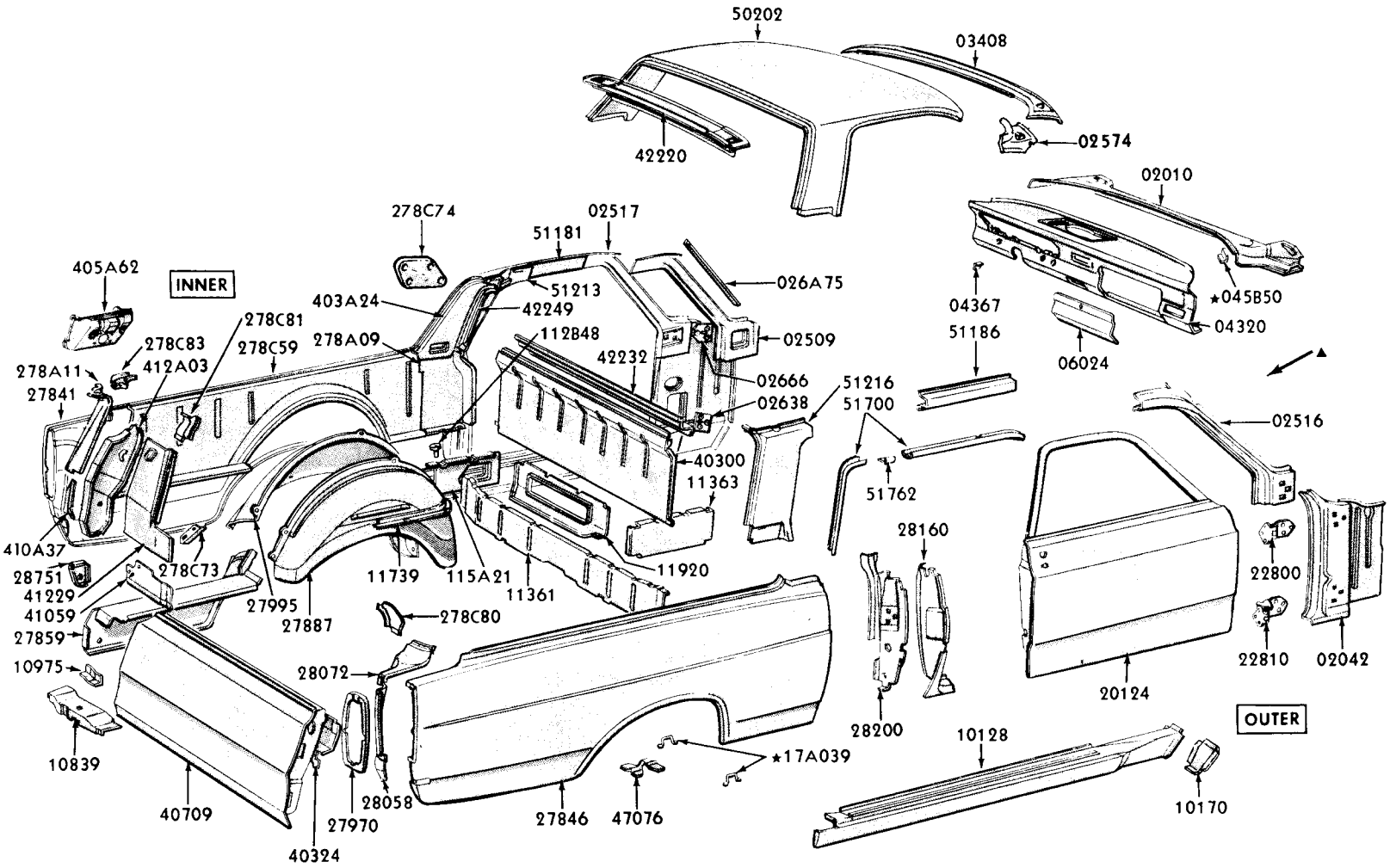


▲FOR FRONT BODY PART REFER TO UNDERBODY ILLUSTRATION

P-5028

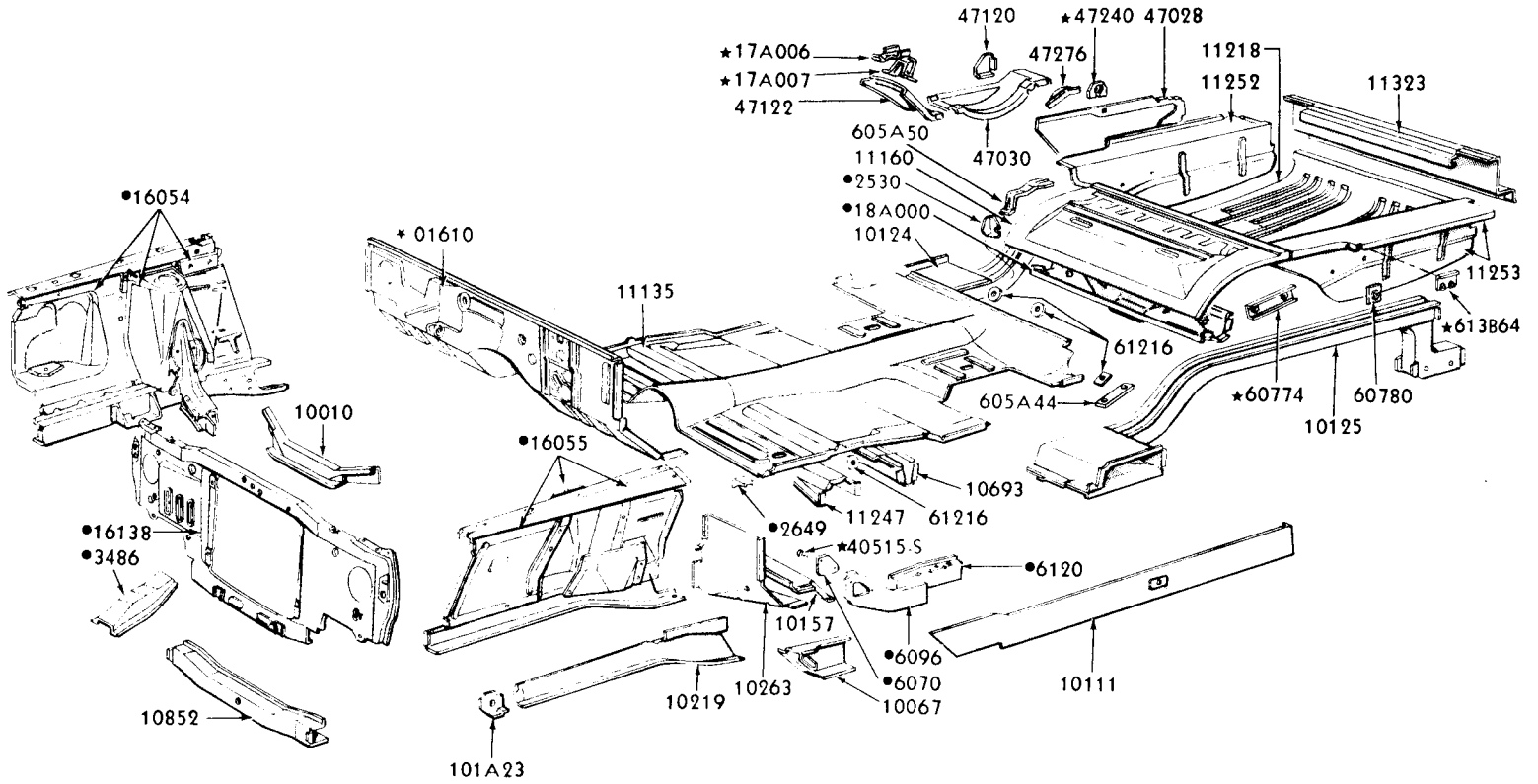


•REFER TO GROUP IN CHASSIS SECTION

P-5024


COPYRIGHT © 1975 — FORD MOTOR COMPANY — DEARBORN, MICHIGAN

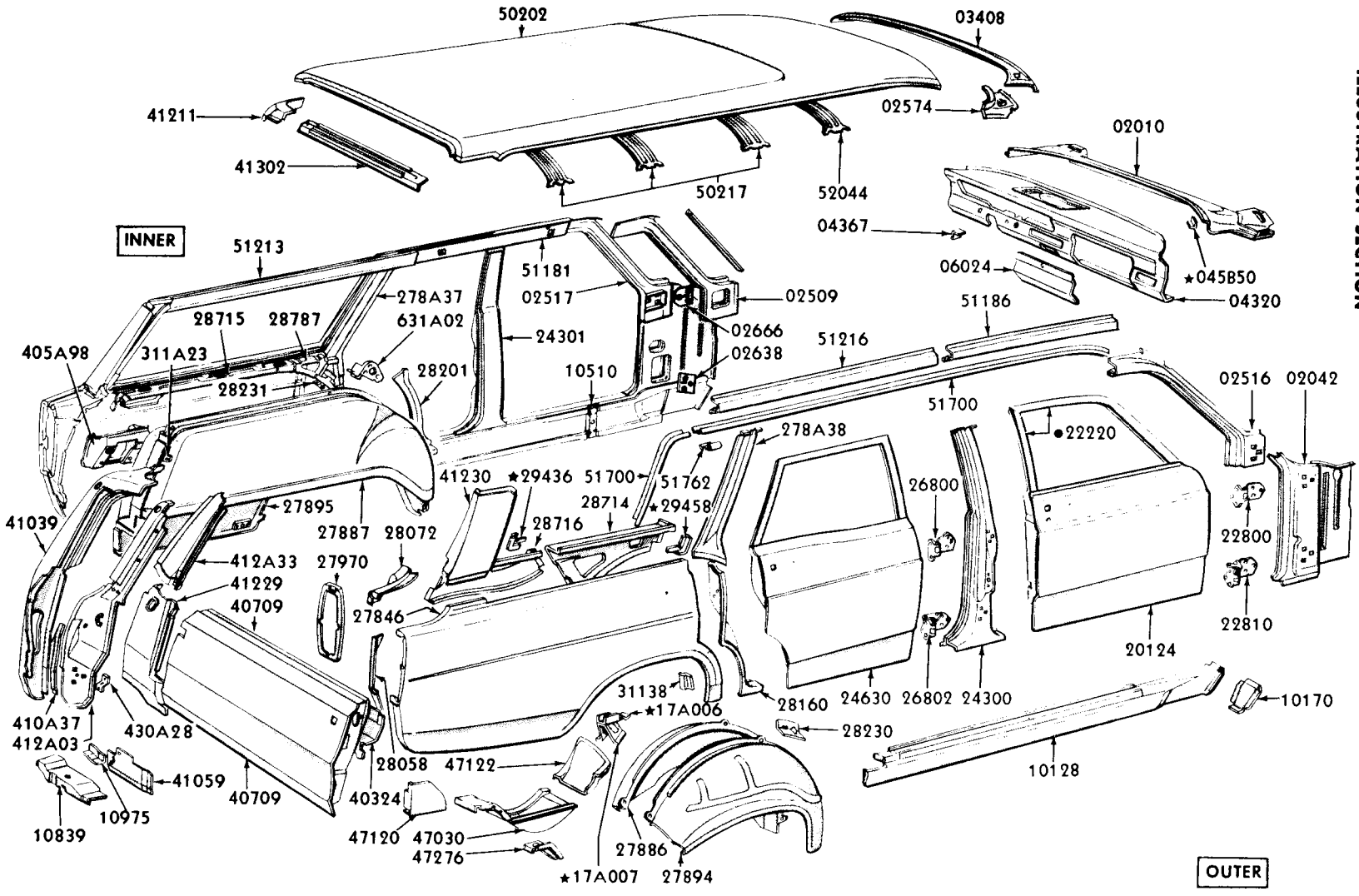


▲FOR FRONT BODY PARTS REFER TO UNDERBODY ILLUSTRATION
● ALSO INCLUDED IN 20124-5

P-5021

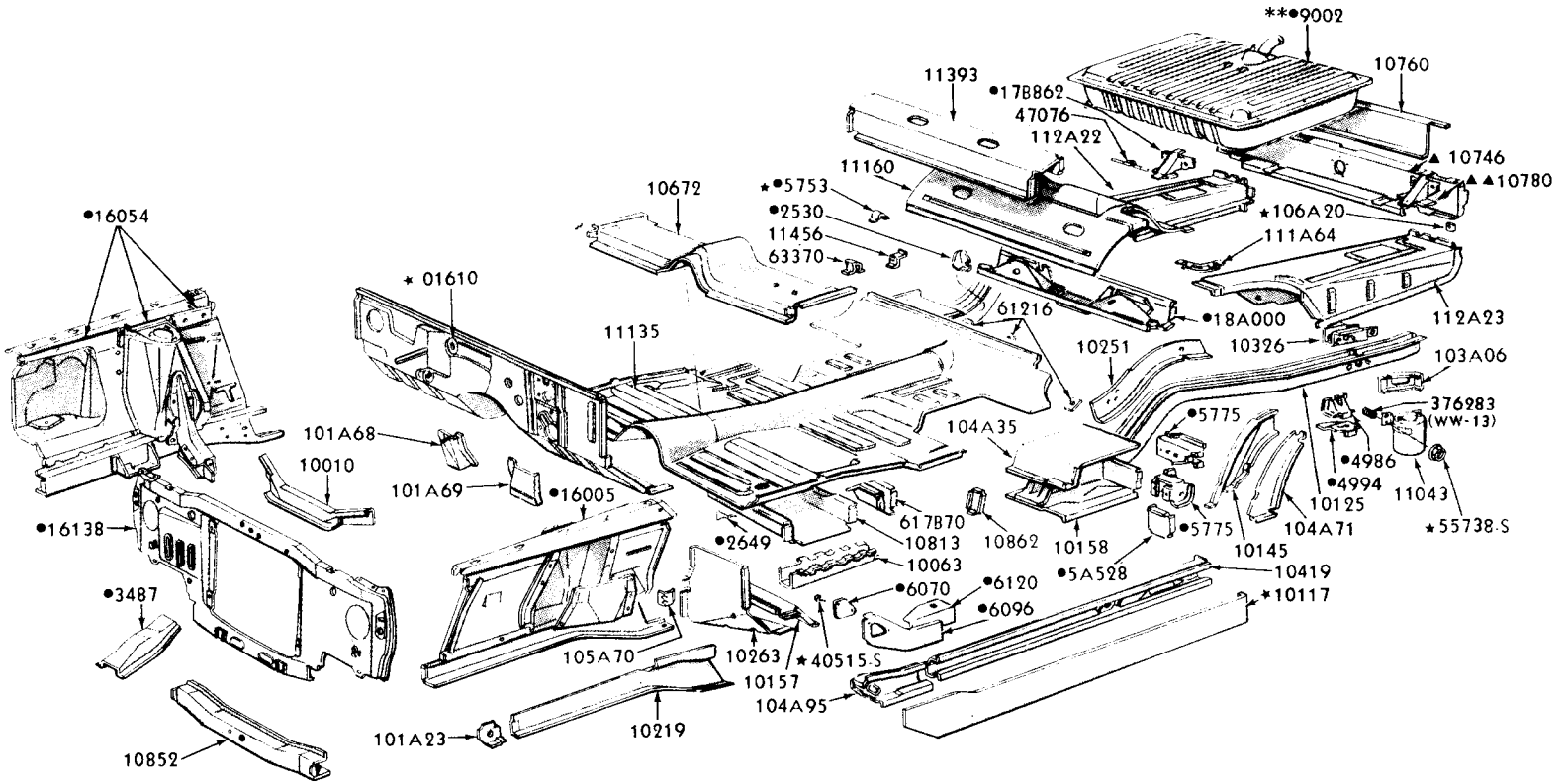


•REFER TO GROUP IN CHASSIS SECTION
**NOT PART OF UNDERBODY
▲ BEFORE 12/1 /65
▲▲ FROM 12/ 1/65

P-5025


COPYRIGHT © 1975 — FORD MOTOR COMPANY — DEARBORN, MICHIGAN

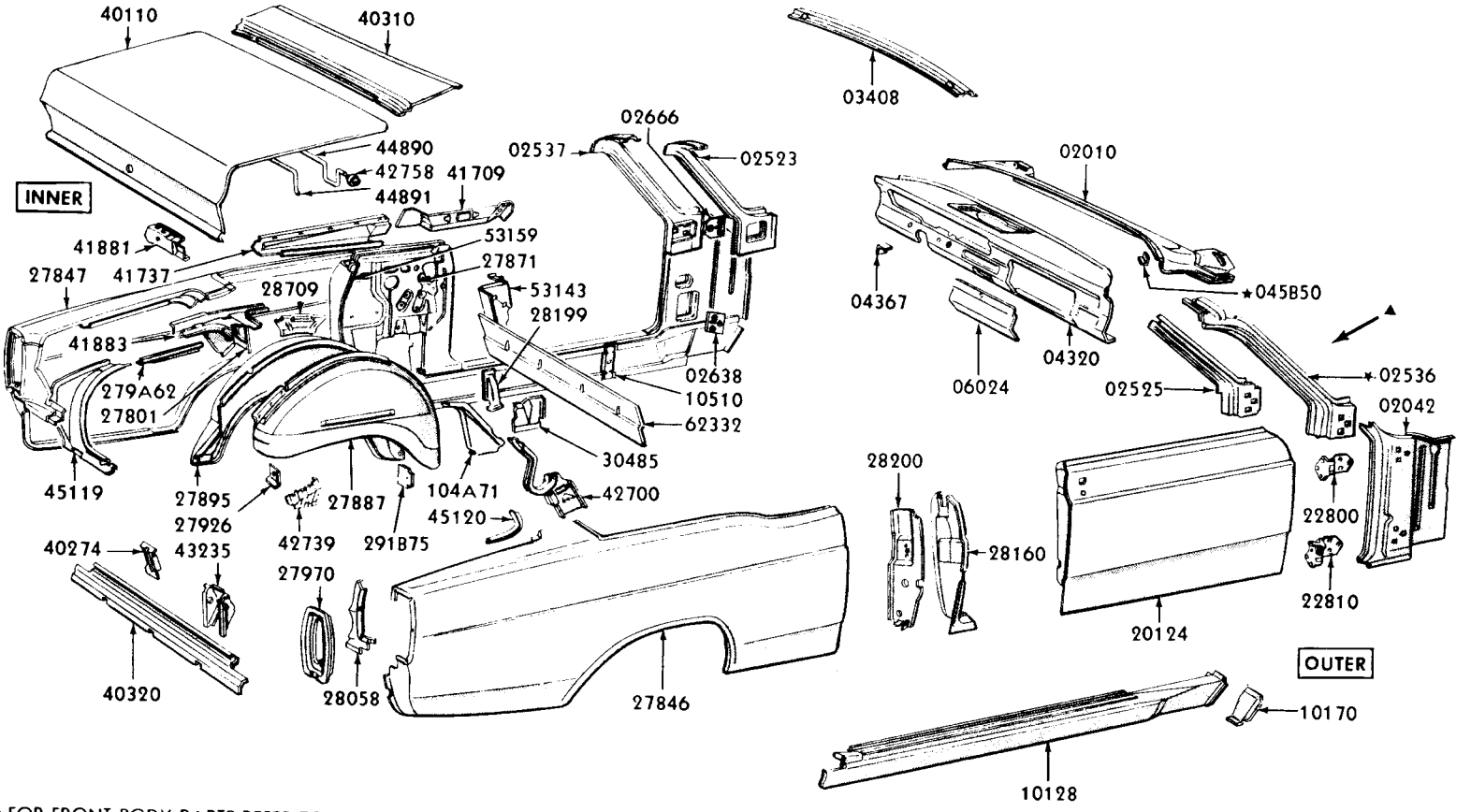


▲FOR FRONT BODY PARTS REFER TO UNDERBODY ILLUSTRATION

P-5022

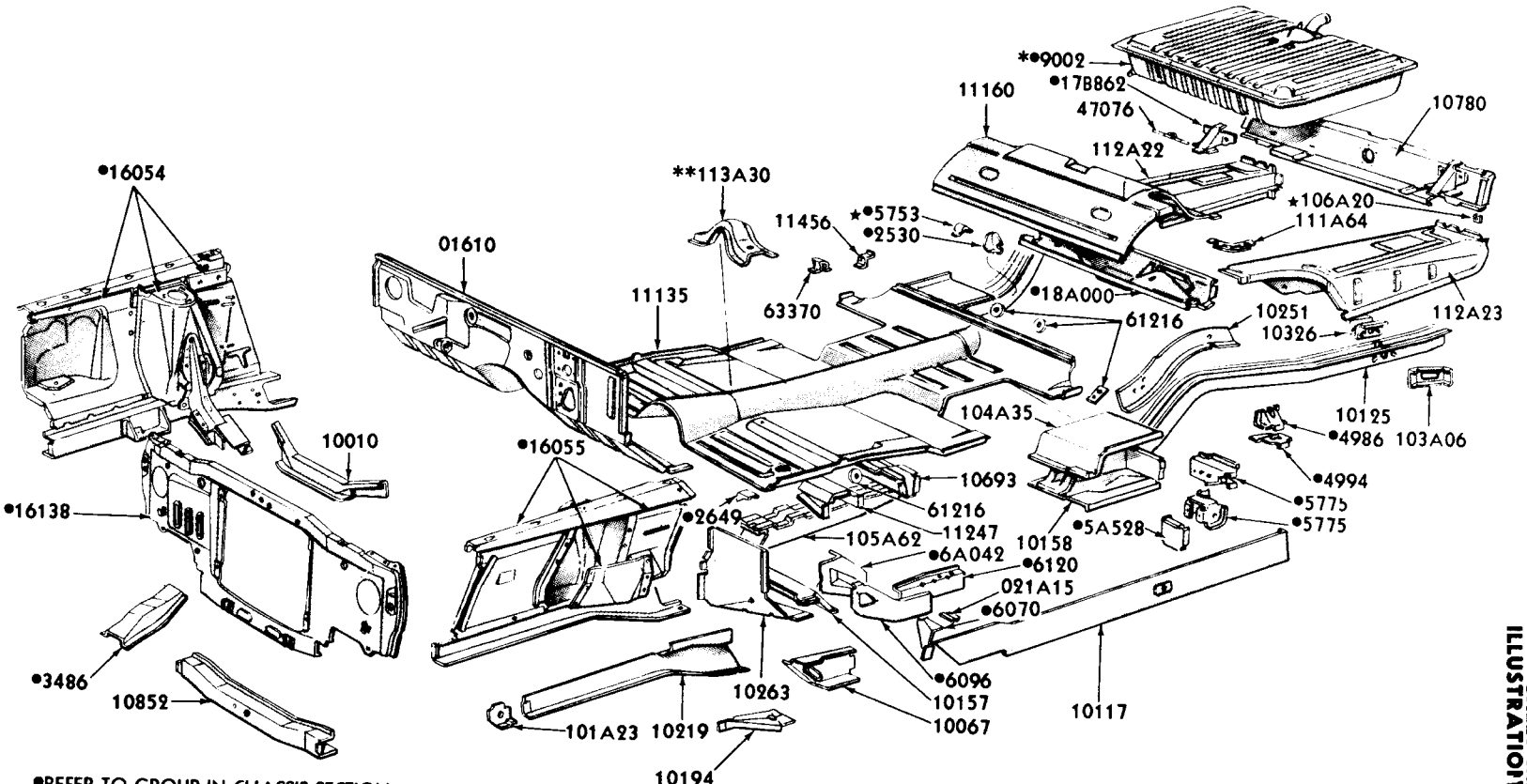


•REFER TO GROUP IN CHASSIS SECTION
*NOT PART OF UNDERBODY
**USED ON B(63C, 63D) ONLY

P-6063

1968/69 FAIRLANE/TORINO - BODY TYPES 54,63,65 - UNDERBODY

COPYRIGHT © 1975 — FORD MOTOR COMPANY — DEARBORN, MICHIGAN

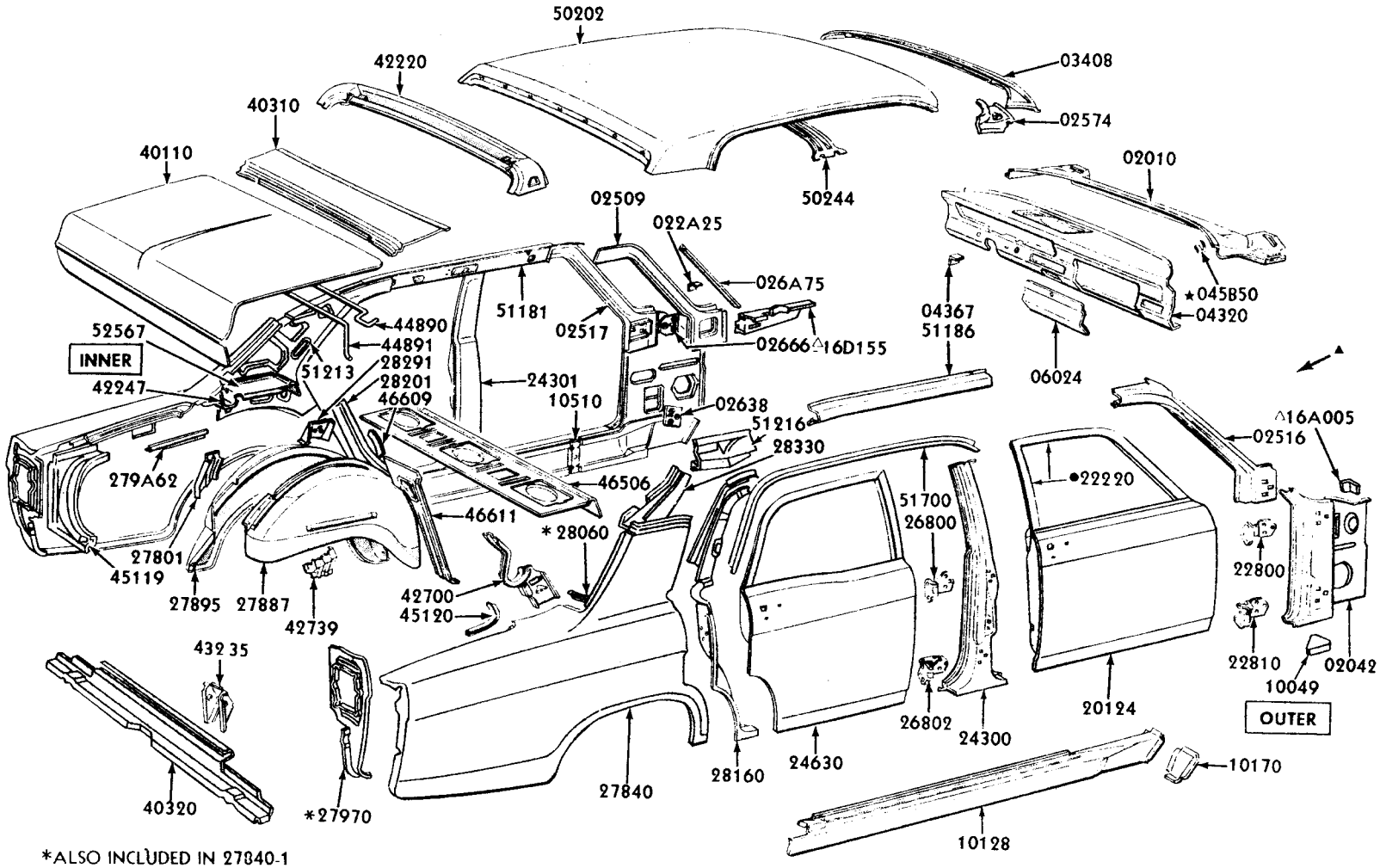


*ALSO INCLUDED IN 27840-1
▲FOR FRONT BODY PARTS REFER TO UNDERBODY ILLUSTRATION
● ALSO INCLUDED IN 20124-5
△REFER TO GROUP IN CHASSIS SECTION

P-6057

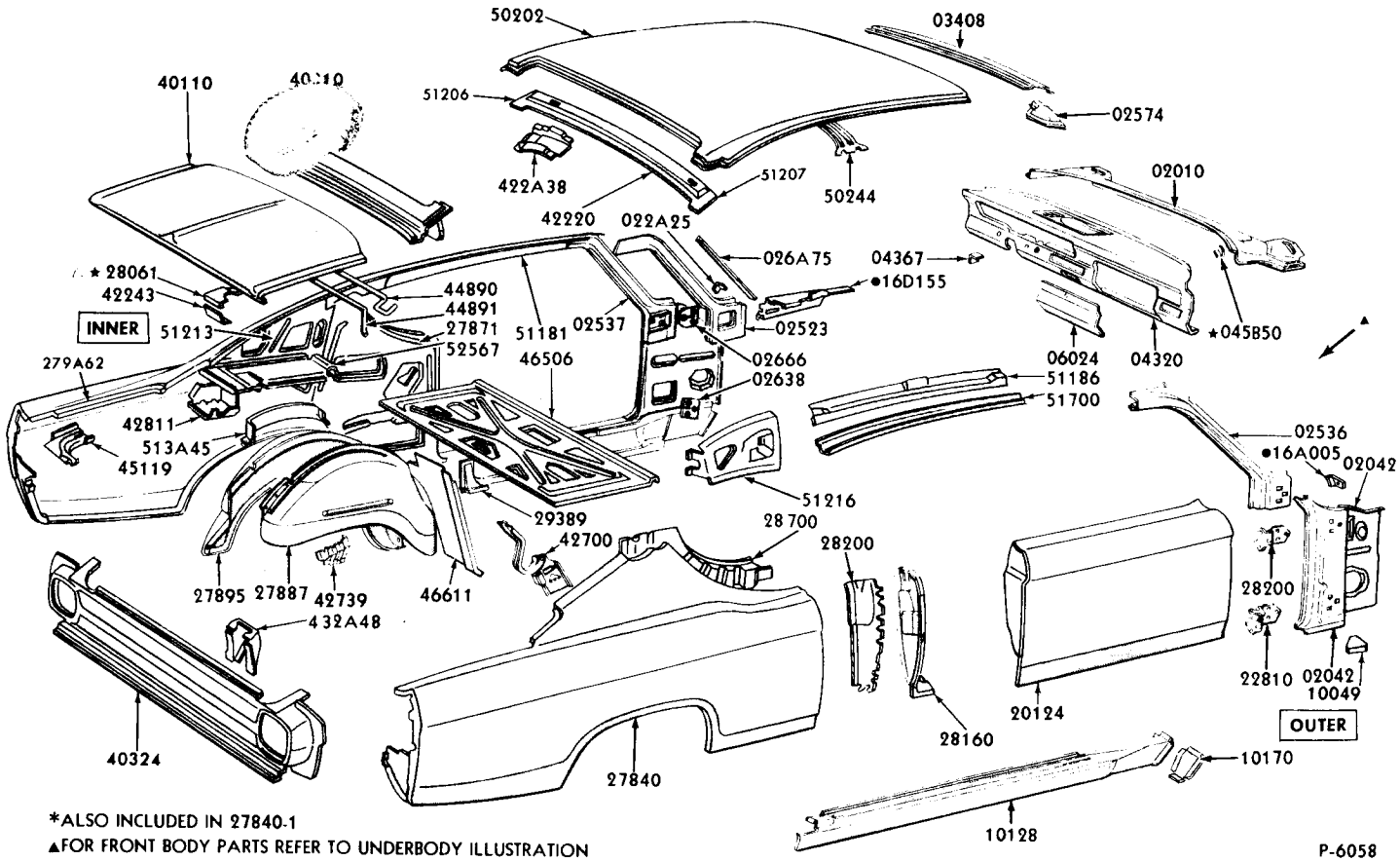


*ALSO INCLUDED IN 27840-1

▲FOR FRONT BODY PARTS REFER TO UNDERBODY ILLUSTRATION

• REFER TO GROUP IN CHASSIS SECTION

△ INCLUDED IN 27840-1


COPYRIGHT © 1975 — FORD MOTOR COMPANY — DEARBORN, MICHIGAN

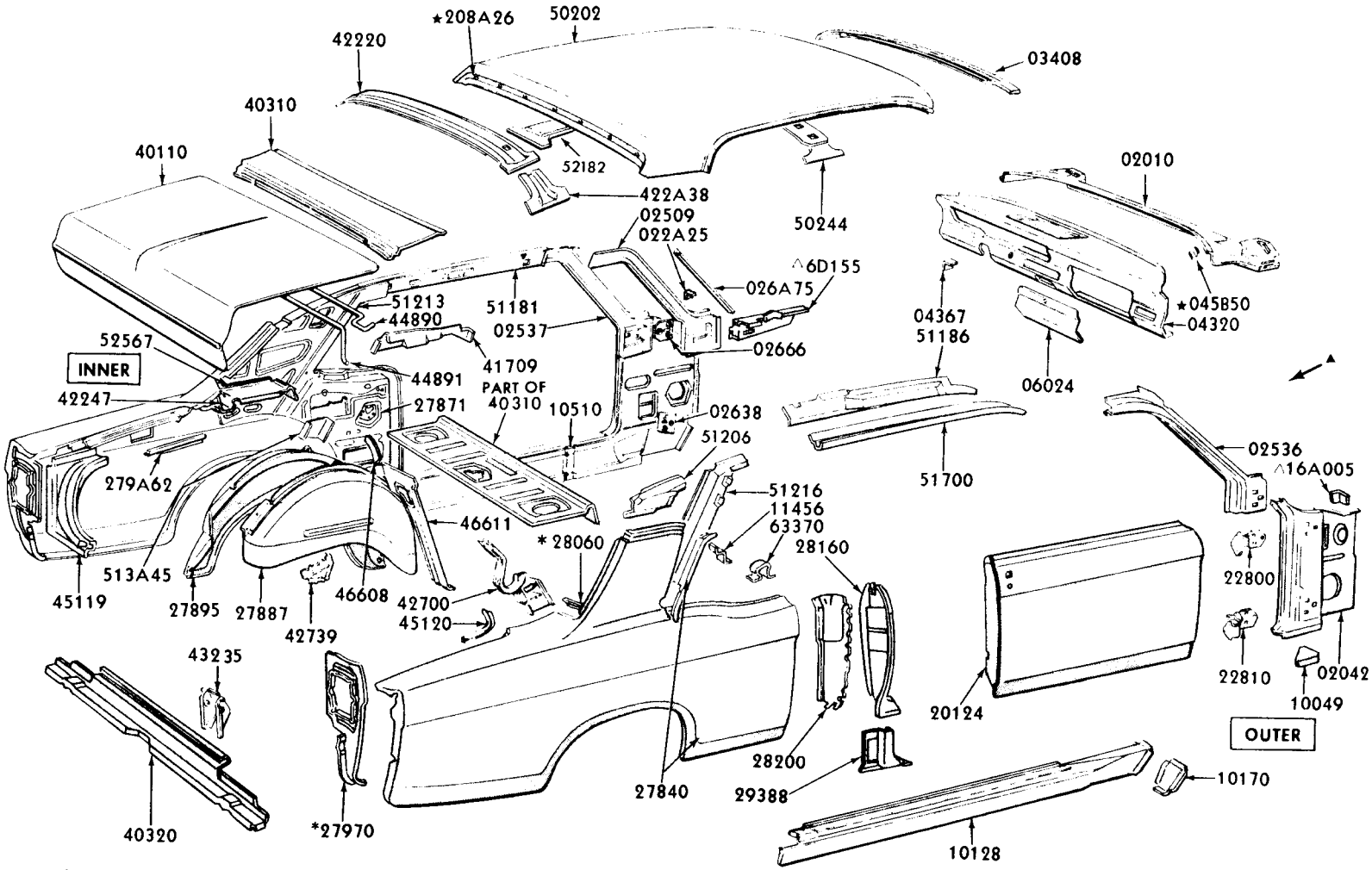


*ALSO INCLUDED IN 27840-1

▲FOR FRONT BODY PARTS REFER TO UNDERBODY ILLUSTRATION

● ALSO INCLUDED IN 20124-5

△ REFER TO GROUP IN CHASSIS SECTION

P-6059

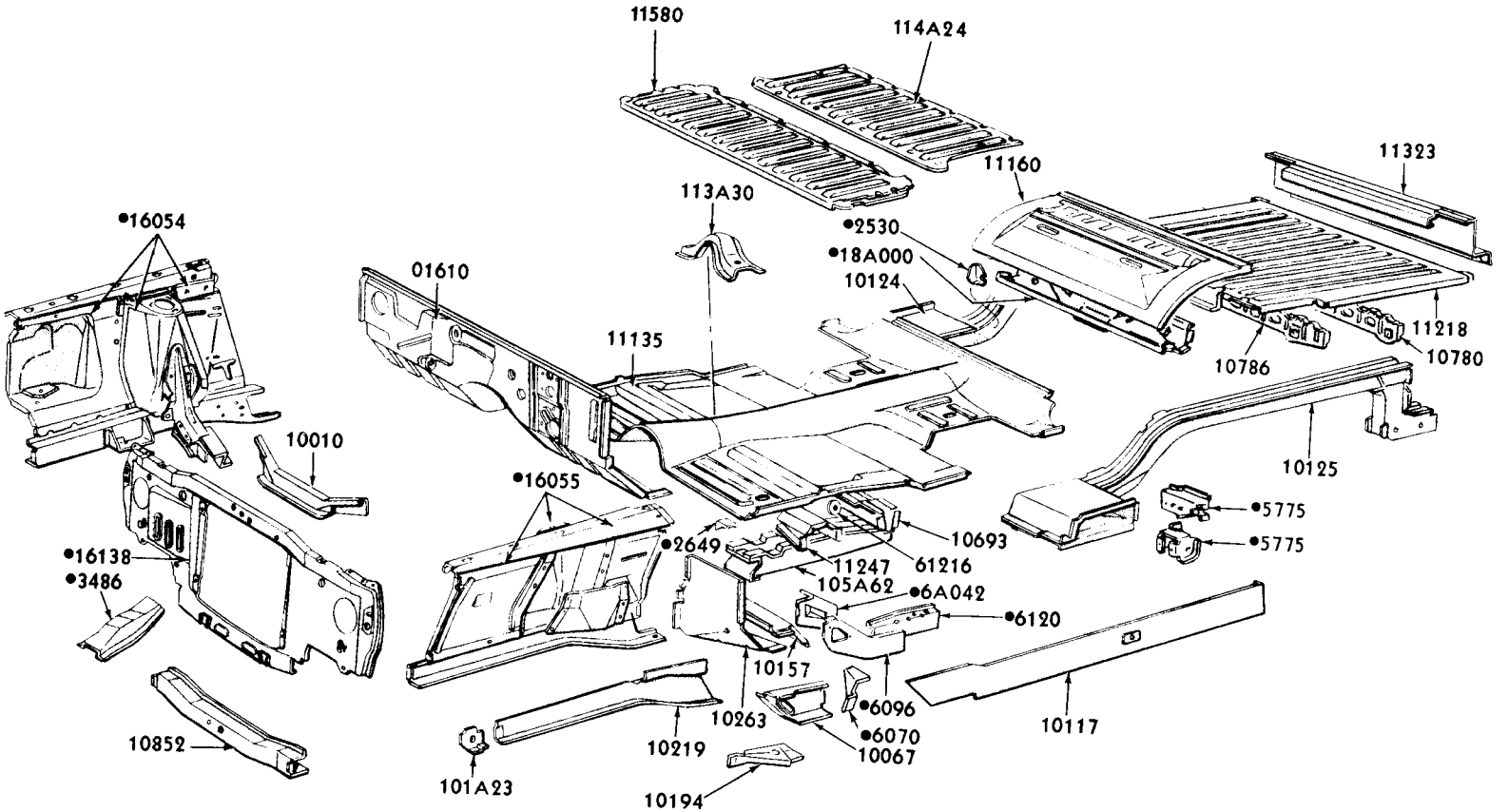


•REFER TO GROUP IN CHASSIS SECTION

P-6064

1968/69 FAIRLANE - BODY TYPE 66 - UNDERBODY

COPYRIGHT © 1975 — FORD MOTOR COMPANY — DEARBORN, MICHIGAN

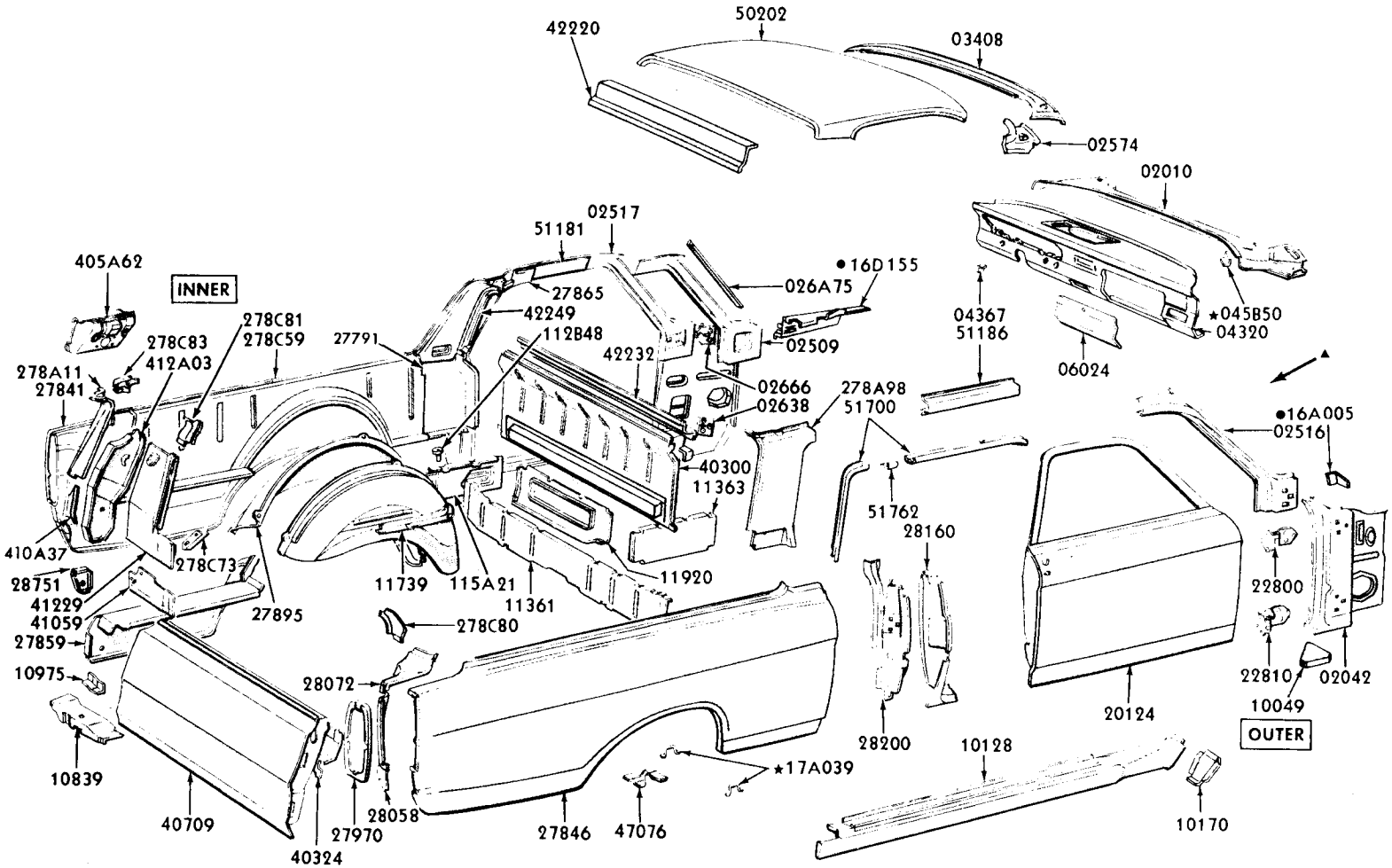


▲FOR FRONT BODY PART REFER TO UNDERBODY ILLUSTRATION
•REFER TO GROUP IN CHASSIS SECTION

P-6060

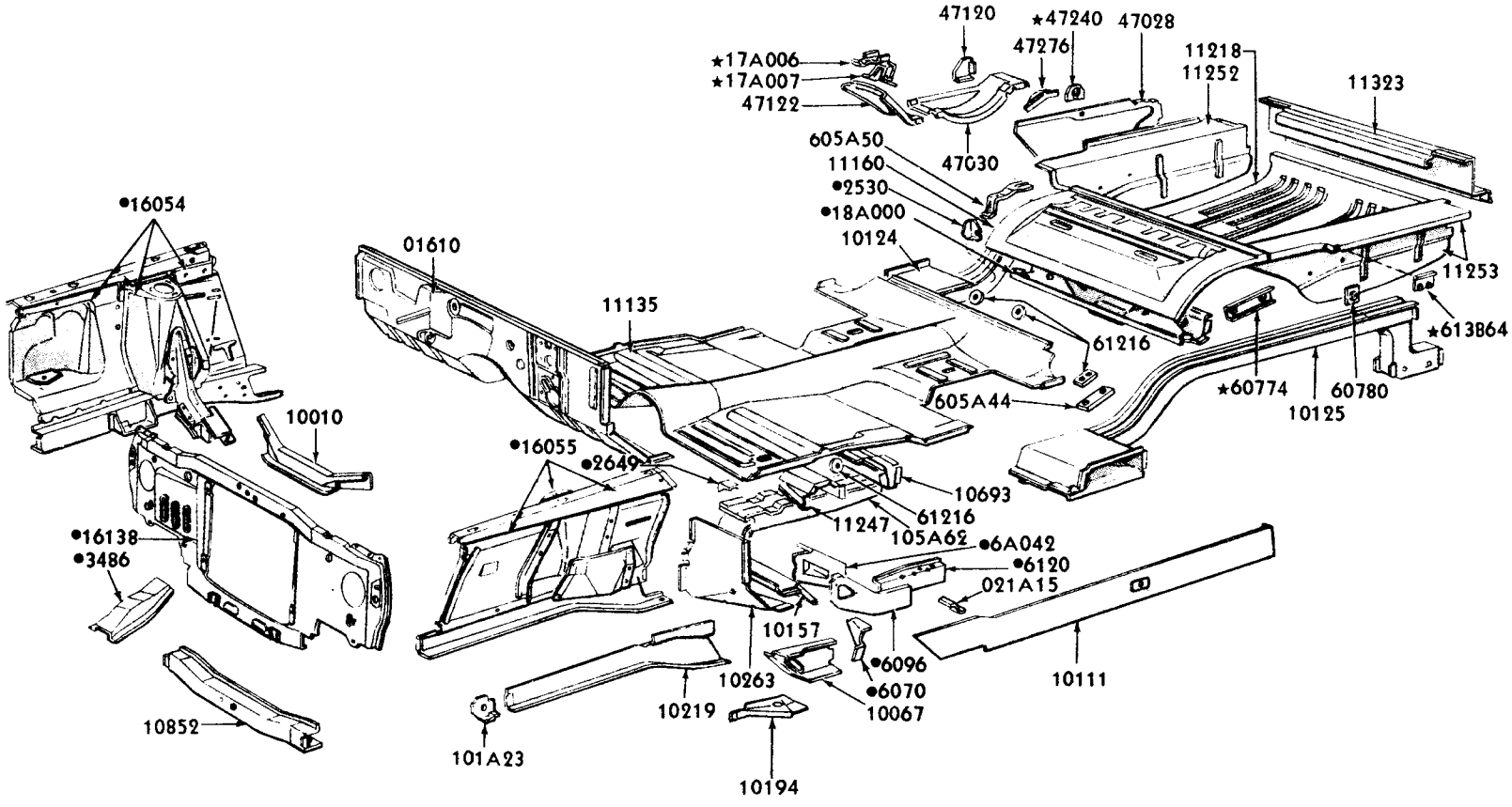


•REFER TO GROUP IN CHASSIS SECTION

P-6065


COPYRIGHT © 1975 — FORD MOTOR COMPANY — DEARBORN, MICHIGAN

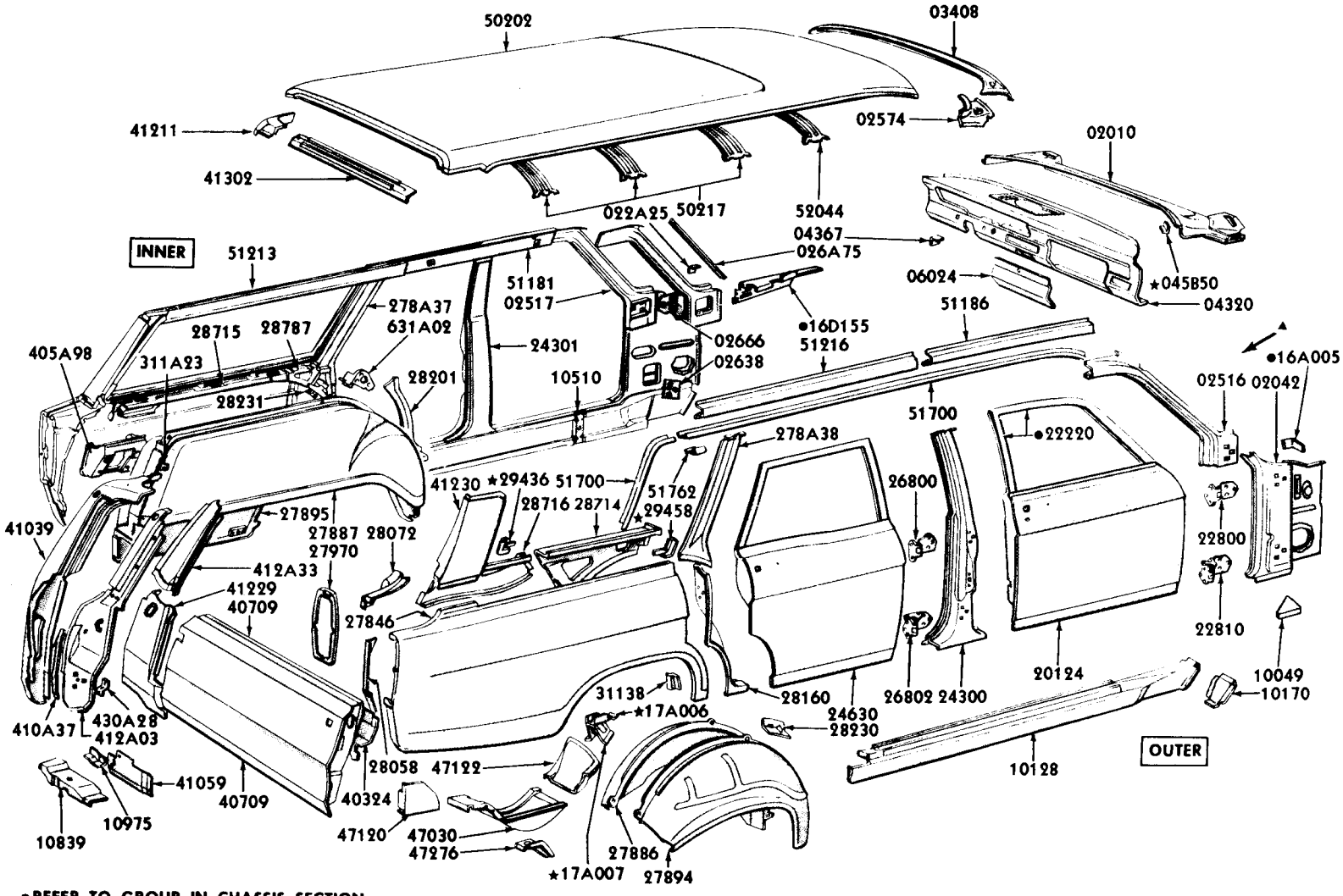


•REFER TO GROUP IN CHASSIS SECTION

▲FOR FRONT BODY PARTS REFER TO UNDERBODY ILLUSTRATION

• ALSO INCLUDED IN 20124-5

P-6061

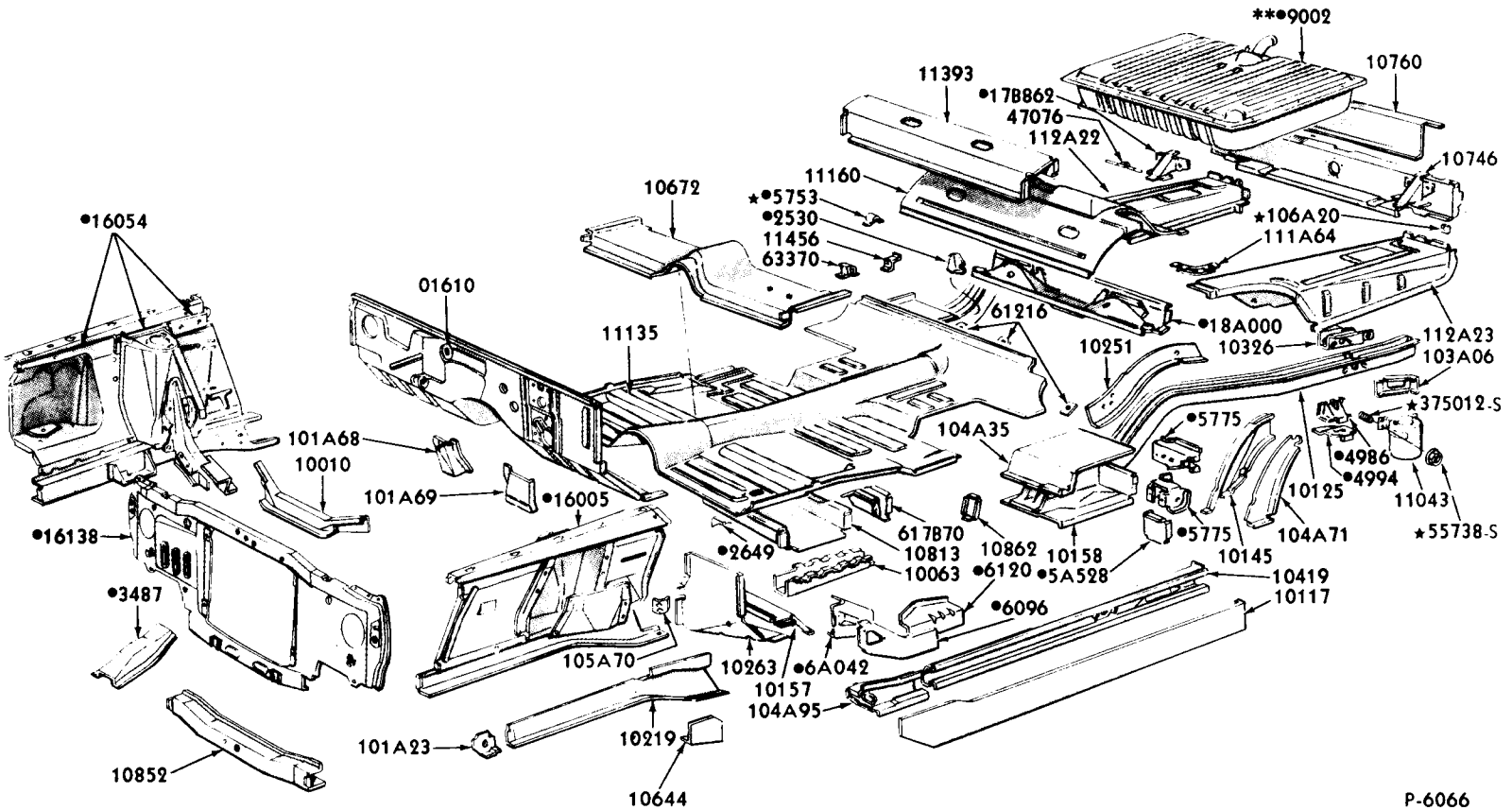


•REFER TO GROUP IN CHASSIS SECTION
**NOT PART OF UNDERBODY


COPYRIGHT © 1975 — FORD MOTOR COMPANY — DEARBORN, MICHIGAN

# FORD CAR PARTS

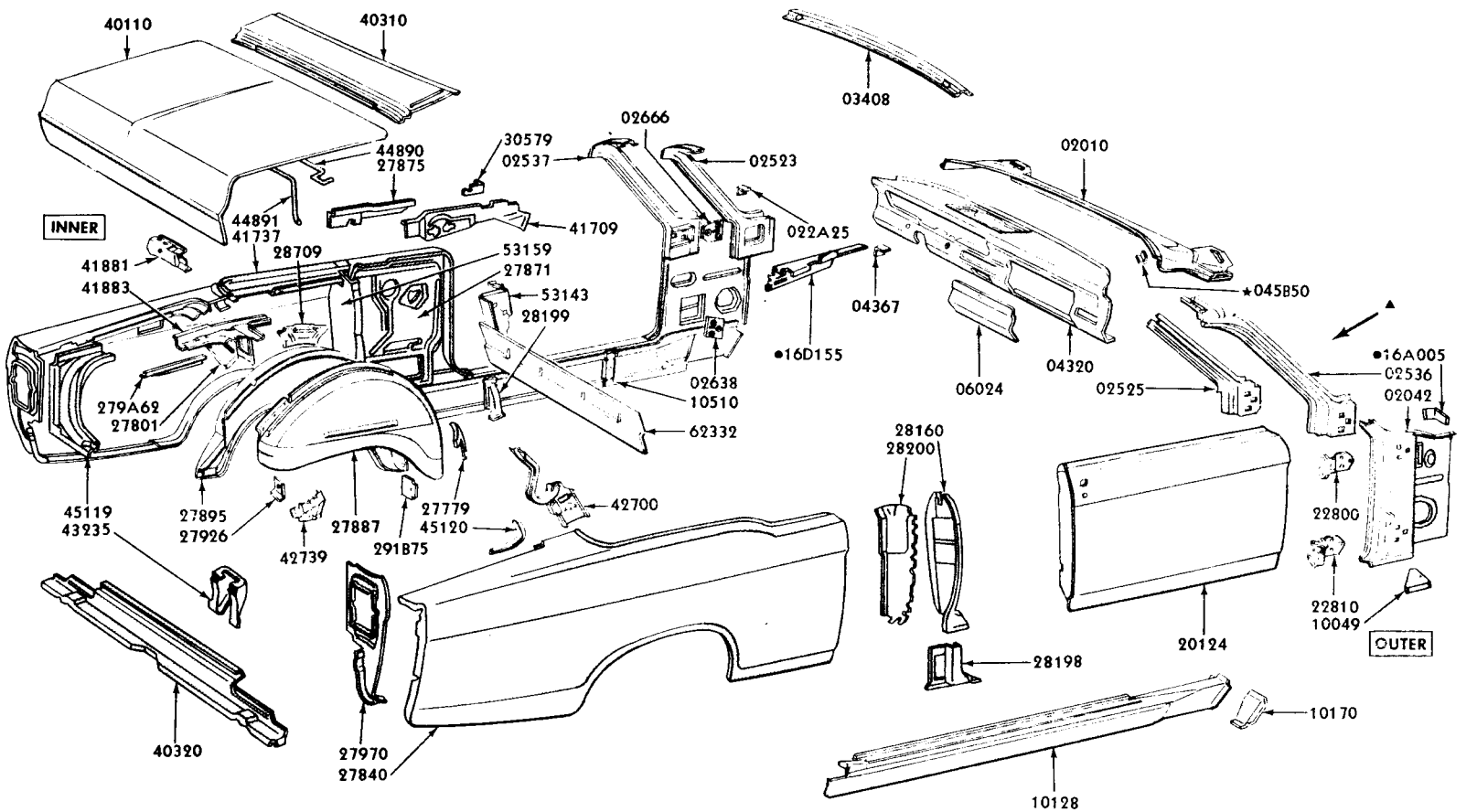


▲FOR FRONT BODY PARTS REFER TO UNDERBODY ILLUSTRATION ●REFER TO GROUP IN CHASSIS SECTION

P-6062

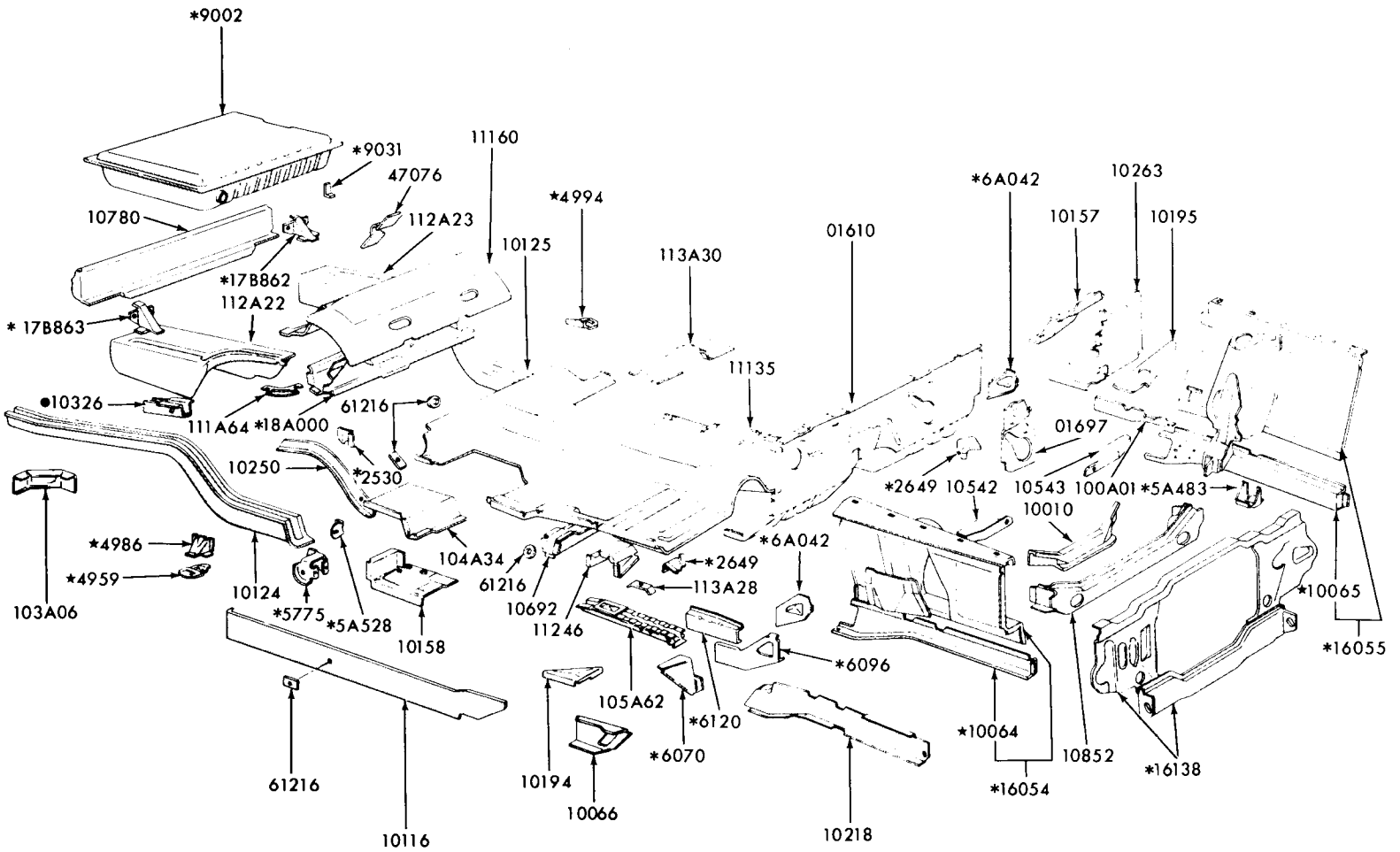


*REFER TO GROUP IN CHASSIS SECTION
●SERVICED ONLY IN ASSEMBLY 10124-5

P-7072


COPYRIGHT © 1975 — FORD MOTOR COMPANY — DEARBORN, MICHIGAN

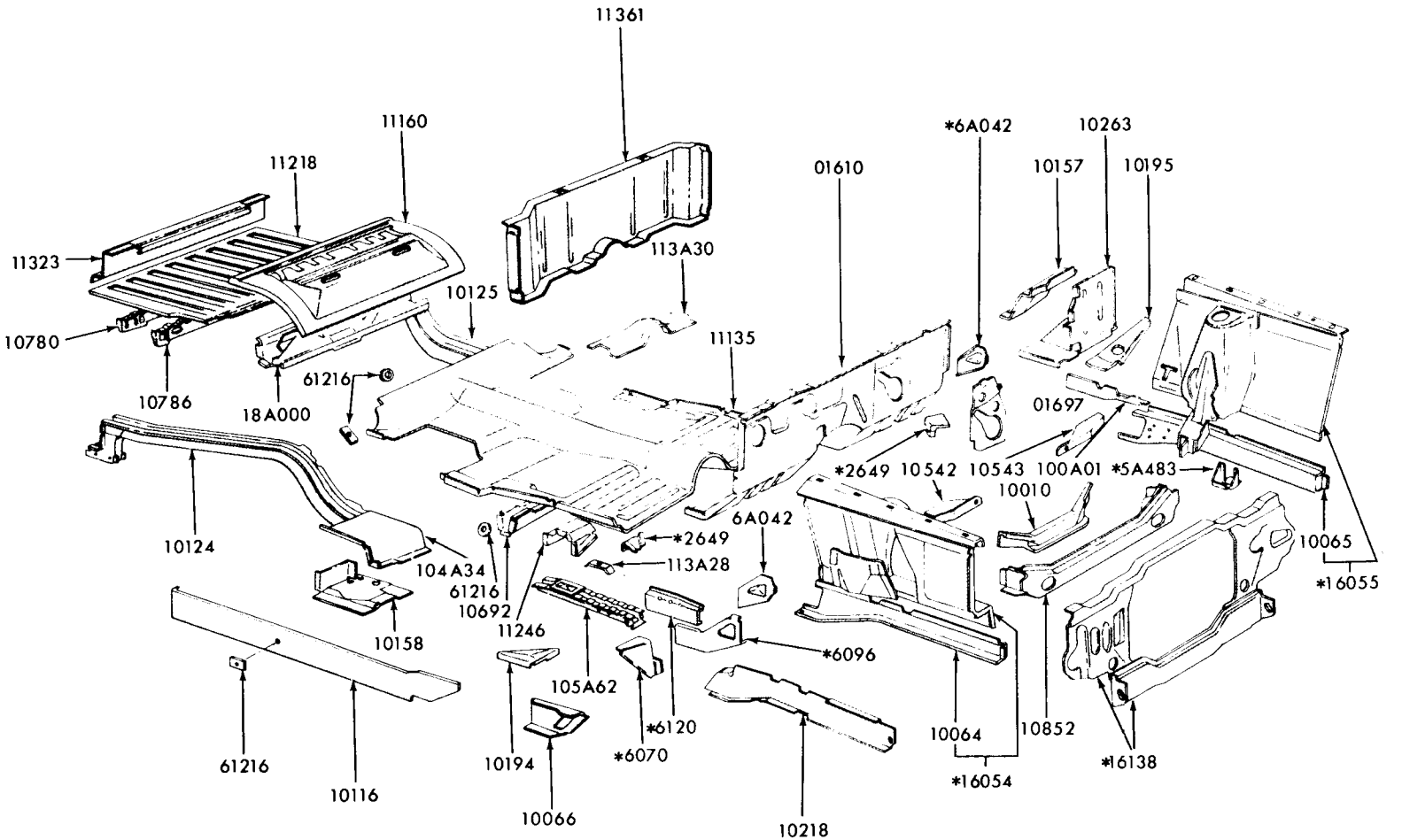


*REFER TO GROUP IN CHASSIS SECTION

P-7074

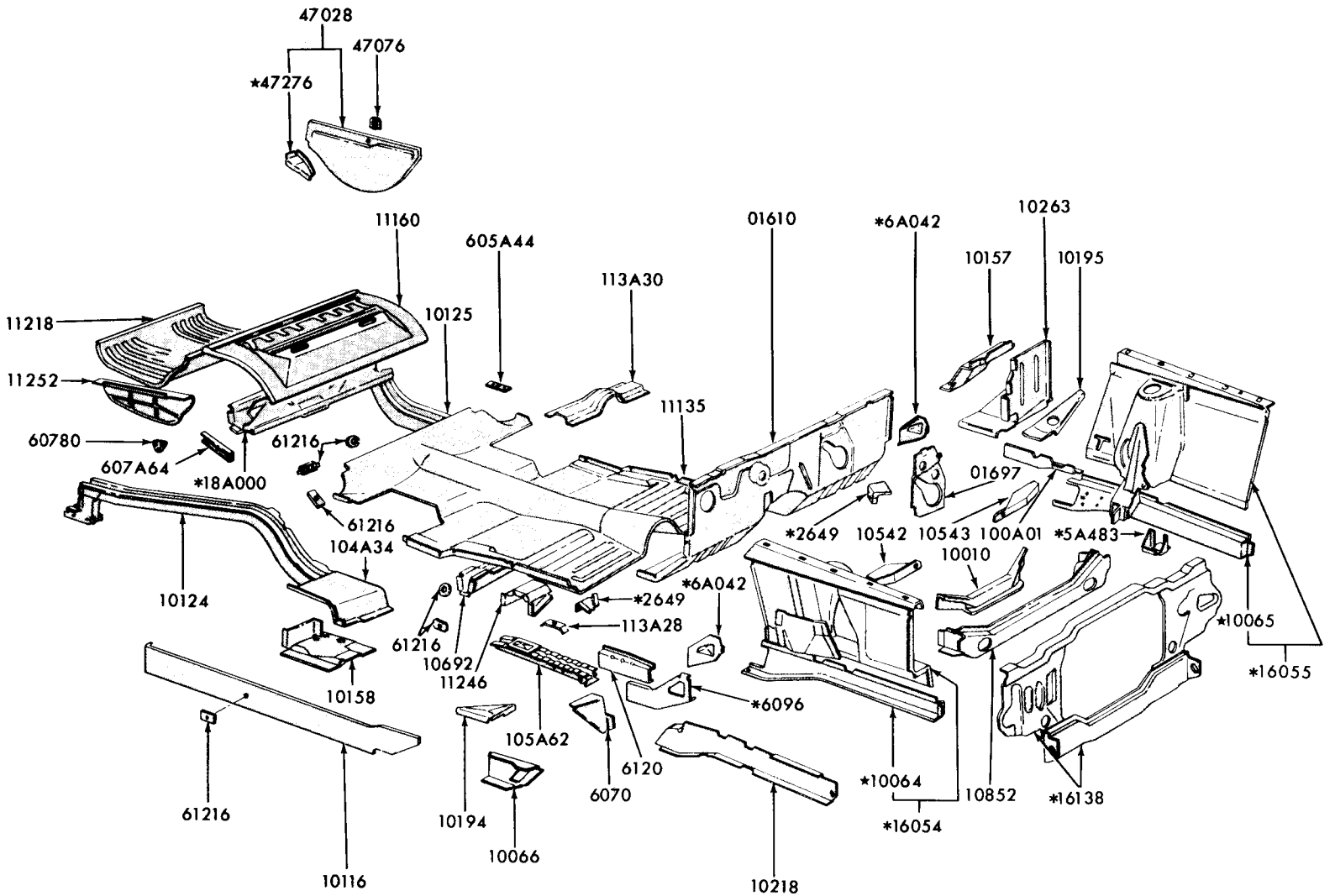


*REFER TO GROUP IN CHASSIS SECTION

P-7073


COPYRIGHT © 1975— FORD MOTOR COMPANY —DEARBORN, MICHIGAN

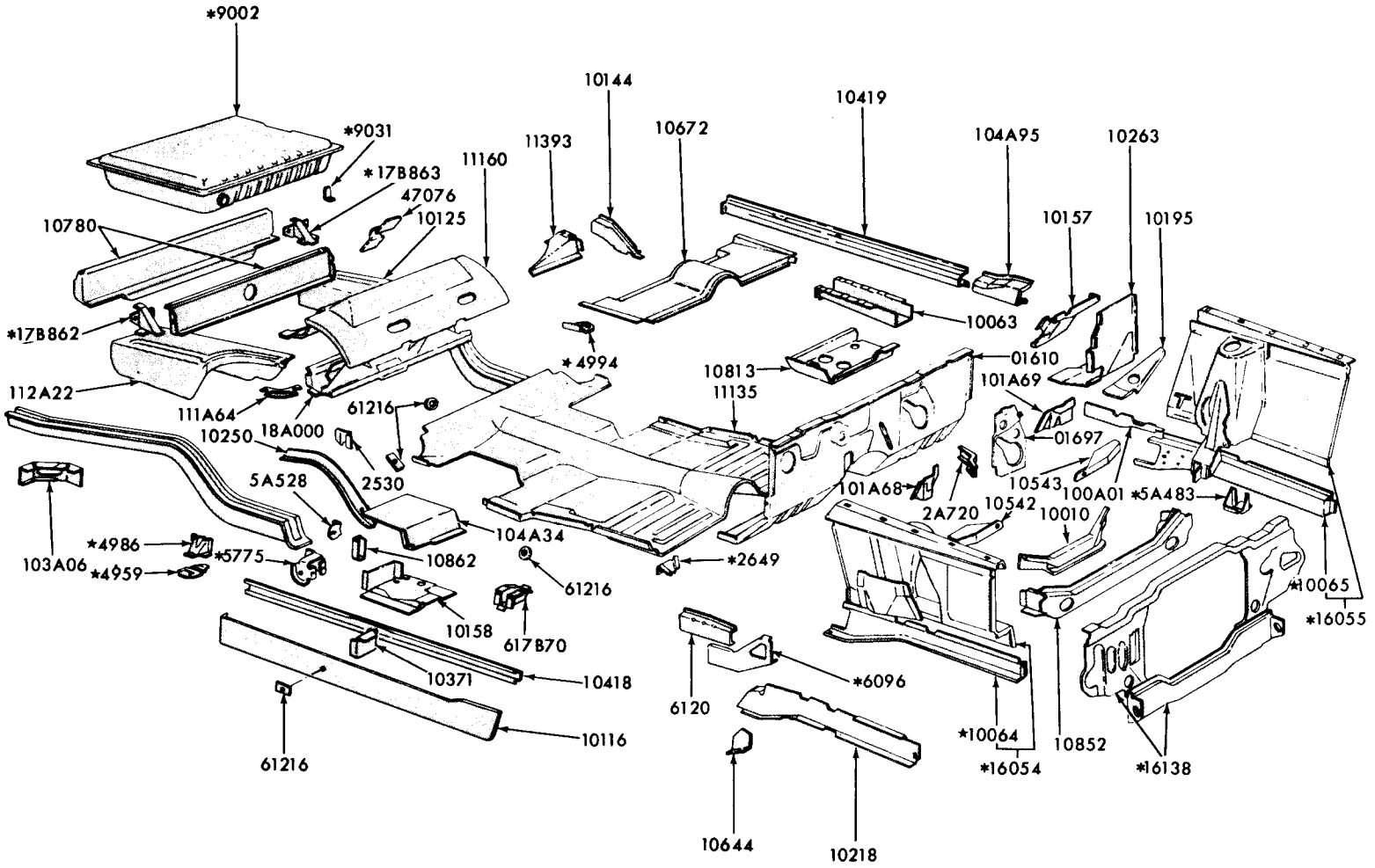


*REFER TO GROUP IN CHASSIS SECTION

P-7075

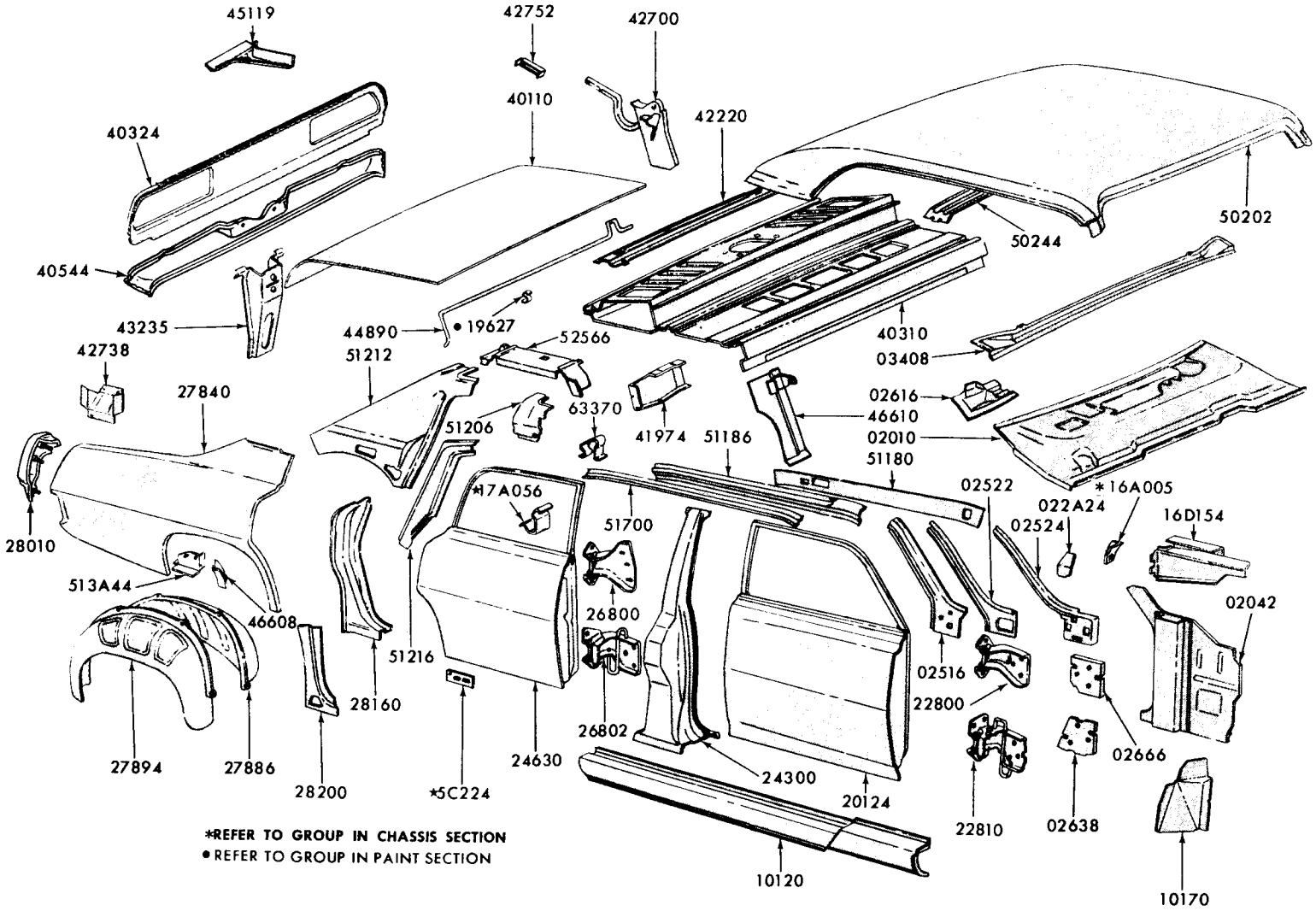


*REFER TO GROUP IN CHASSIS SECTION
• REFER TO GROUP IN PAINT SECTION

P-7081


COPYRIGHT © 1975 — FORD MOTOR COMPANY — DEARBORN, MICHIGAN

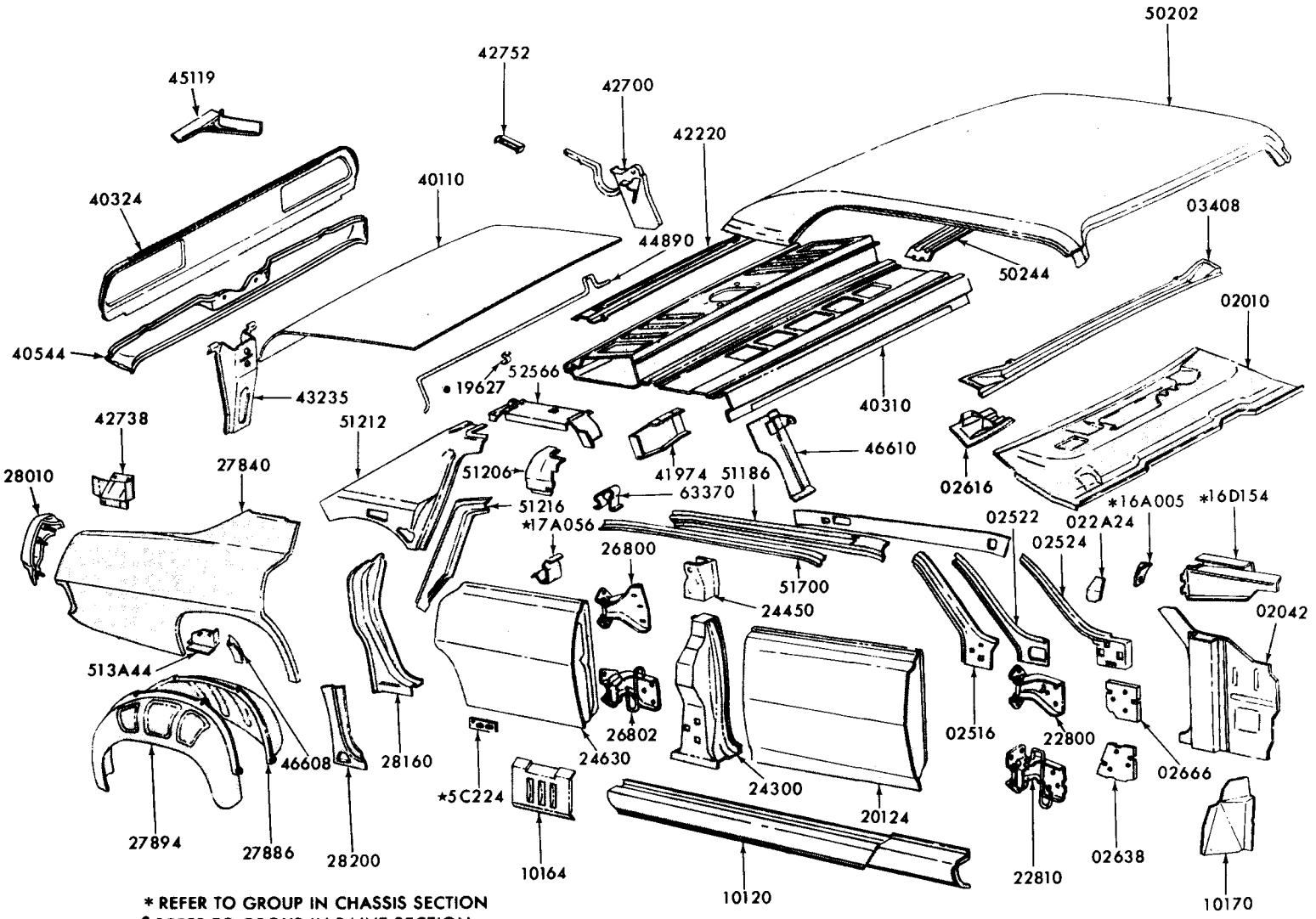
50202
42752
45119
42700
42220
40110
40324
03408
44890
50244
02010
40544
52566
• 19627
43235
40310
42738
51212
46610
51206
41974
51186
28010
27840
63370
02616
51216
*16A005
*16D154
*17A056
02522
022A24
02524
26800
51700
24450
02042
513A44
26802
02516
22800
46608
28160
24630
02666
*5C224
24300
20124
27894
27886
28200
10164
10120
22810
02638
10170
* REFER TO GROUP IN CHASSIS SECTION
• REFER TO GROUP IN PAINT SECTION
P-7082

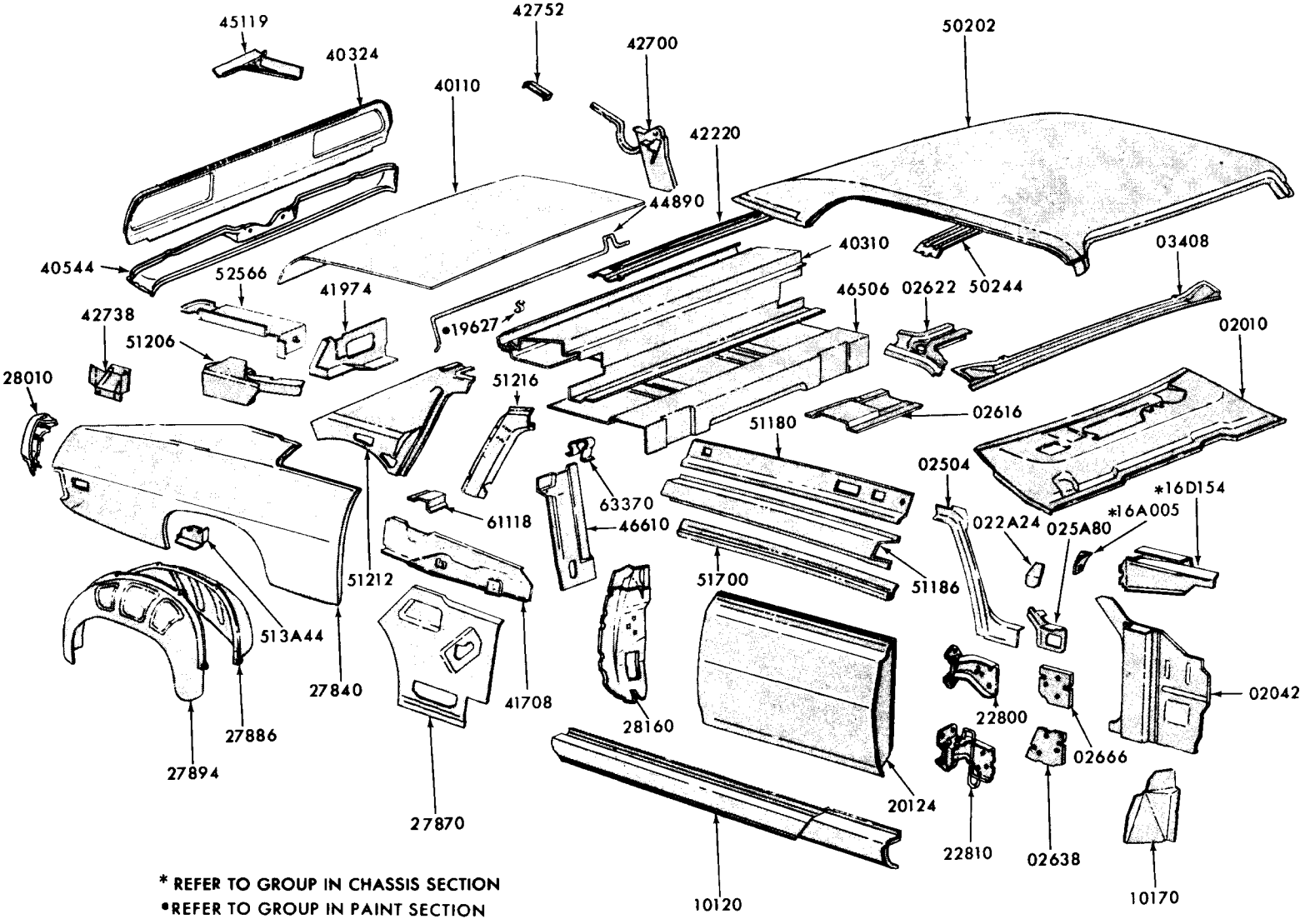


* REFER TO GROUP IN CHASSIS SECTION
•REFER TO GROUP IN PAINT SECTION

P-7084


COPYRIGHT © 1975 — FORD MOTOR COMPANY — DEARBORN, MICHIGAN

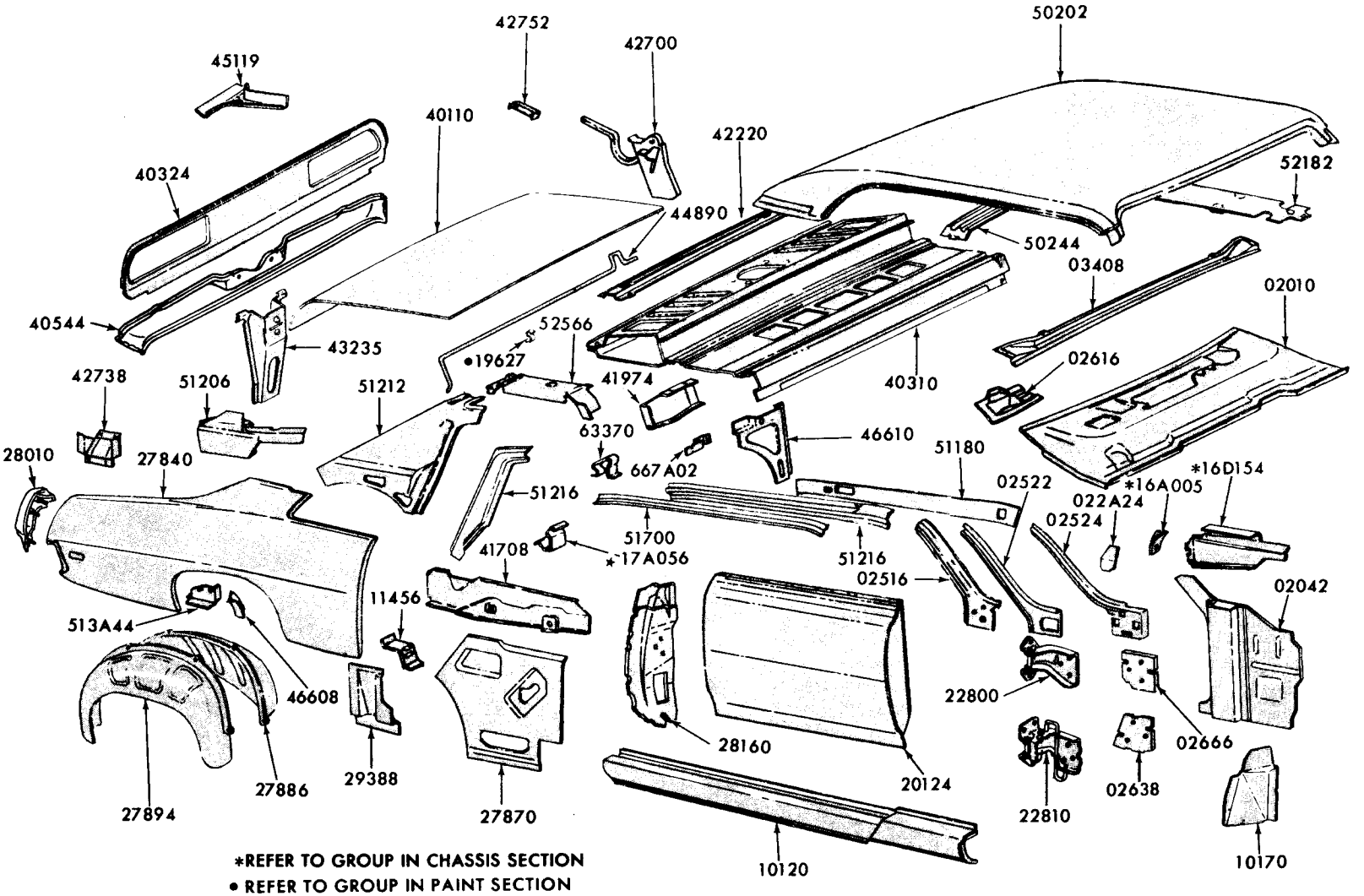


*REFER TO GROUP IN CHASSIS SECTION
• REFER TO GROUP IN PAINT SECTION

P-7085

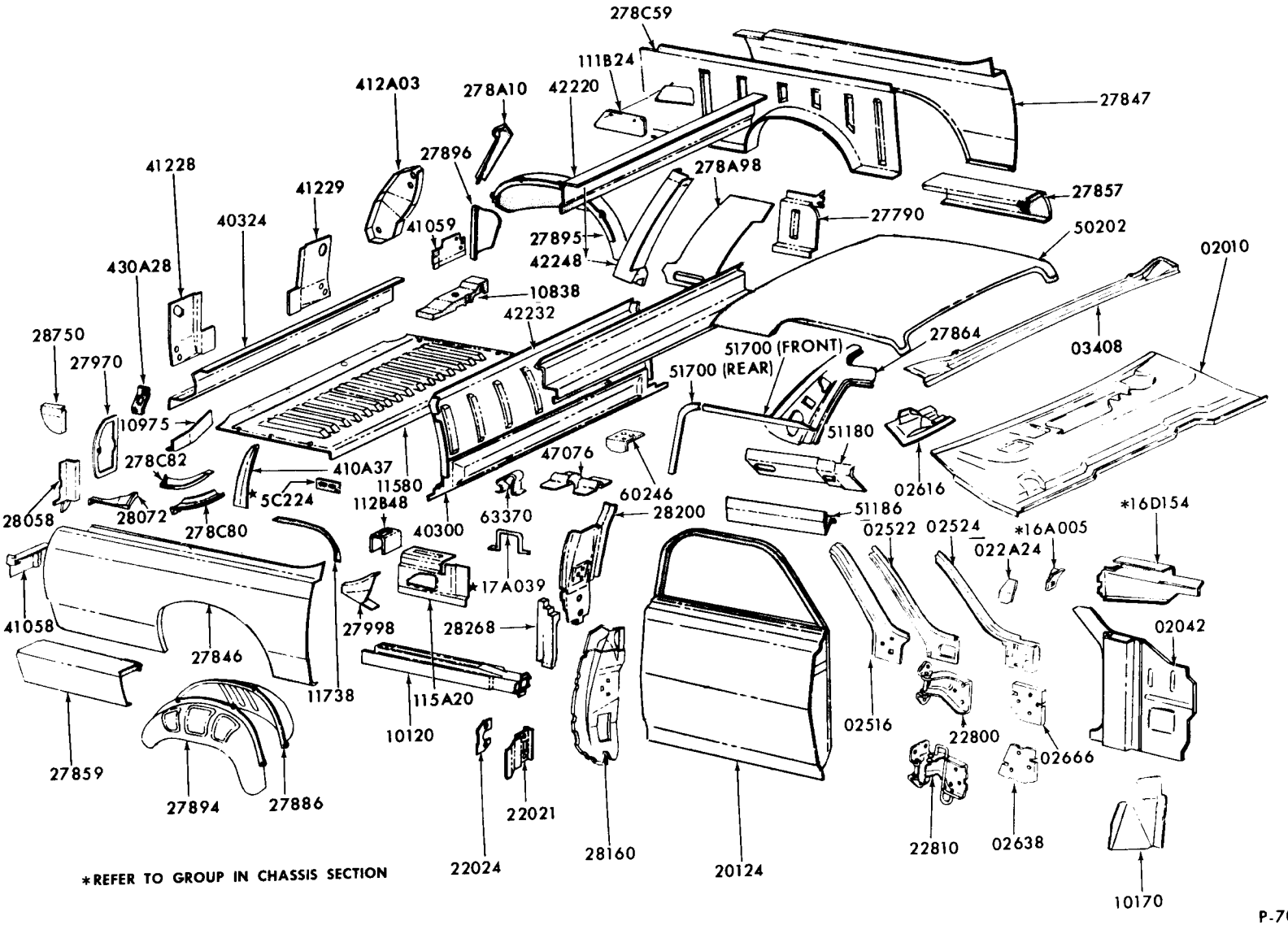


P-7086


COPYRIGHT © 1975 — FORD MOTOR COMPANY — DEARBORN, MICHIGAN

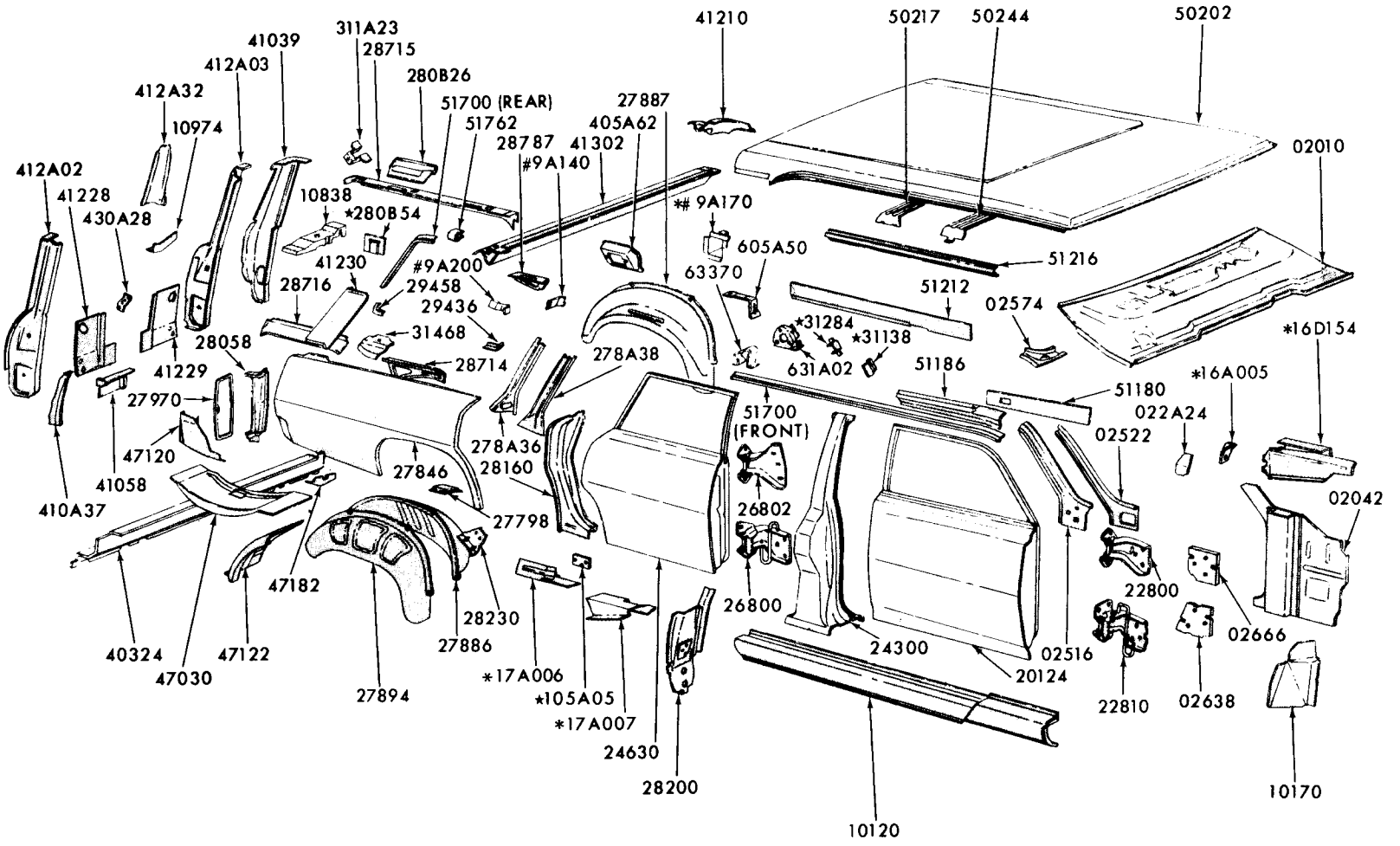


* REFER TO GROUP IN CHASSIS SECTION
#SERVICED ONLY IN ASSEMBLY - GROUP 27846

P-7087

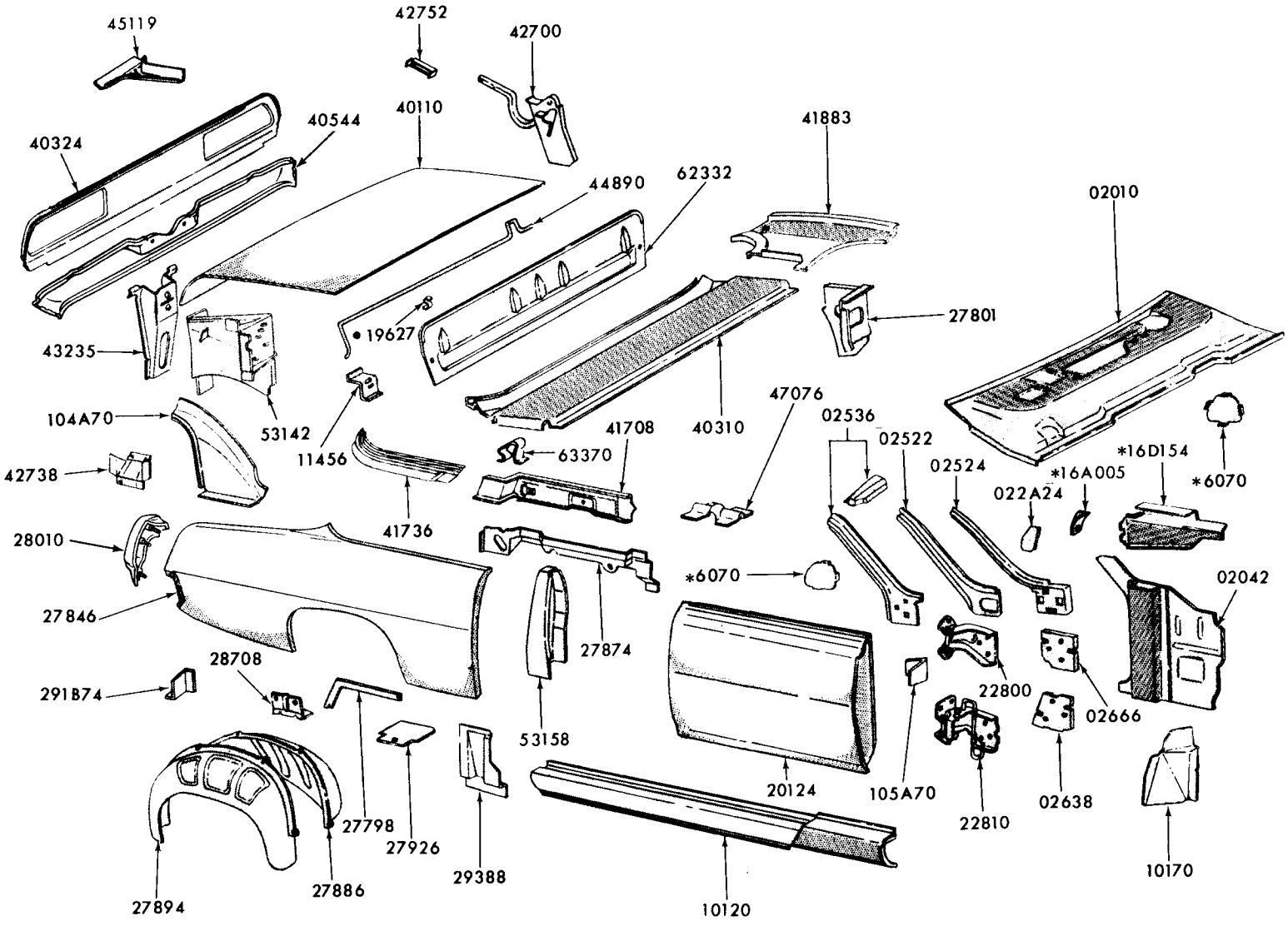


* REFER TO GROUP IN CHASSIS SECTION
• REFER TO GROUP IN PAINT SECTION

P-7088


COPYRIGHT © 1975 — FORD MOTOR COMPANY — DEARBORN, MICHIGAN

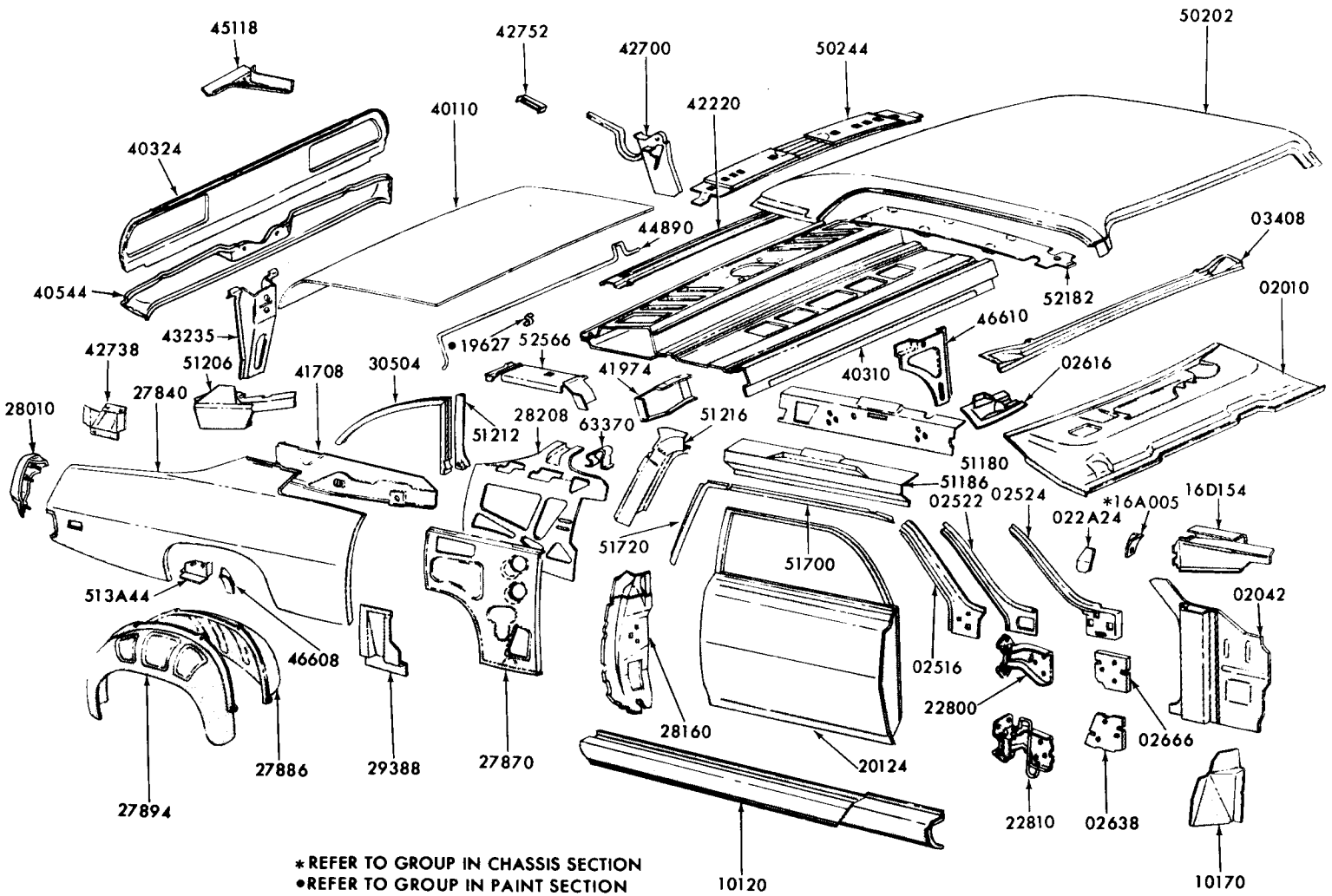


*REFER TO GROUP IN CHASSIS SECTION
•REFER TO GROUP IN PAINT SECTION

P-7083

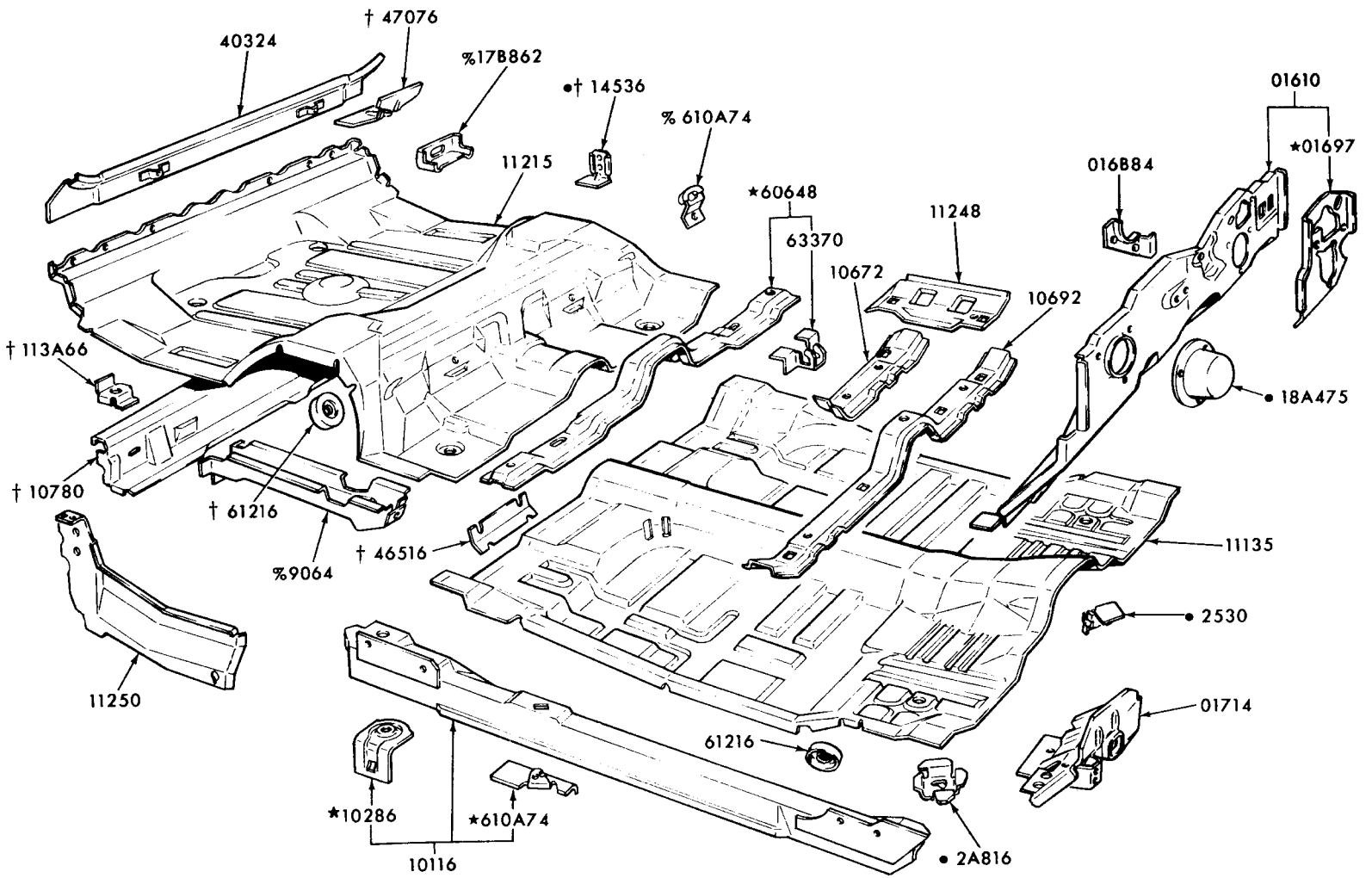


% SUPPLIED ONLY IN ASSEMBLY-GROUP 11215
† ALSO SUPPLIED IN ASSEMBLY-GROUP 11215
• REFER TO CHASSIS SECTION

P-8642


COPYRIGHT © 1975 — FORD MOTOR COMPANY — DEARBORN, MICHIGAN

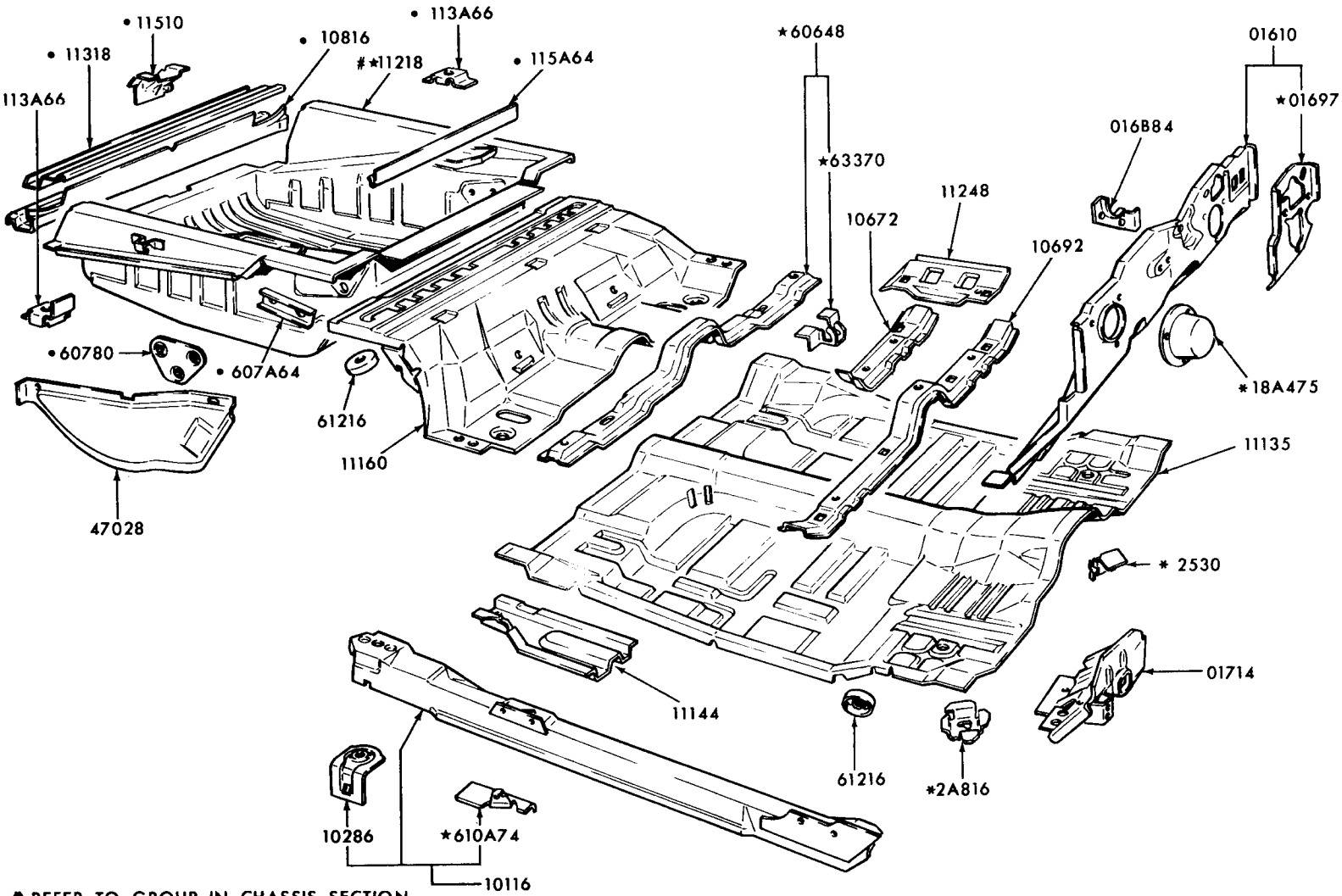


* REFER TO GROUP IN CHASSIS SECTION
# SUPPLIED ONLY IN ASSEMBLY-GROUP 11215
• ALSO SUPPLIED IN ASSEMBLY-GROUP 11215

P-8643

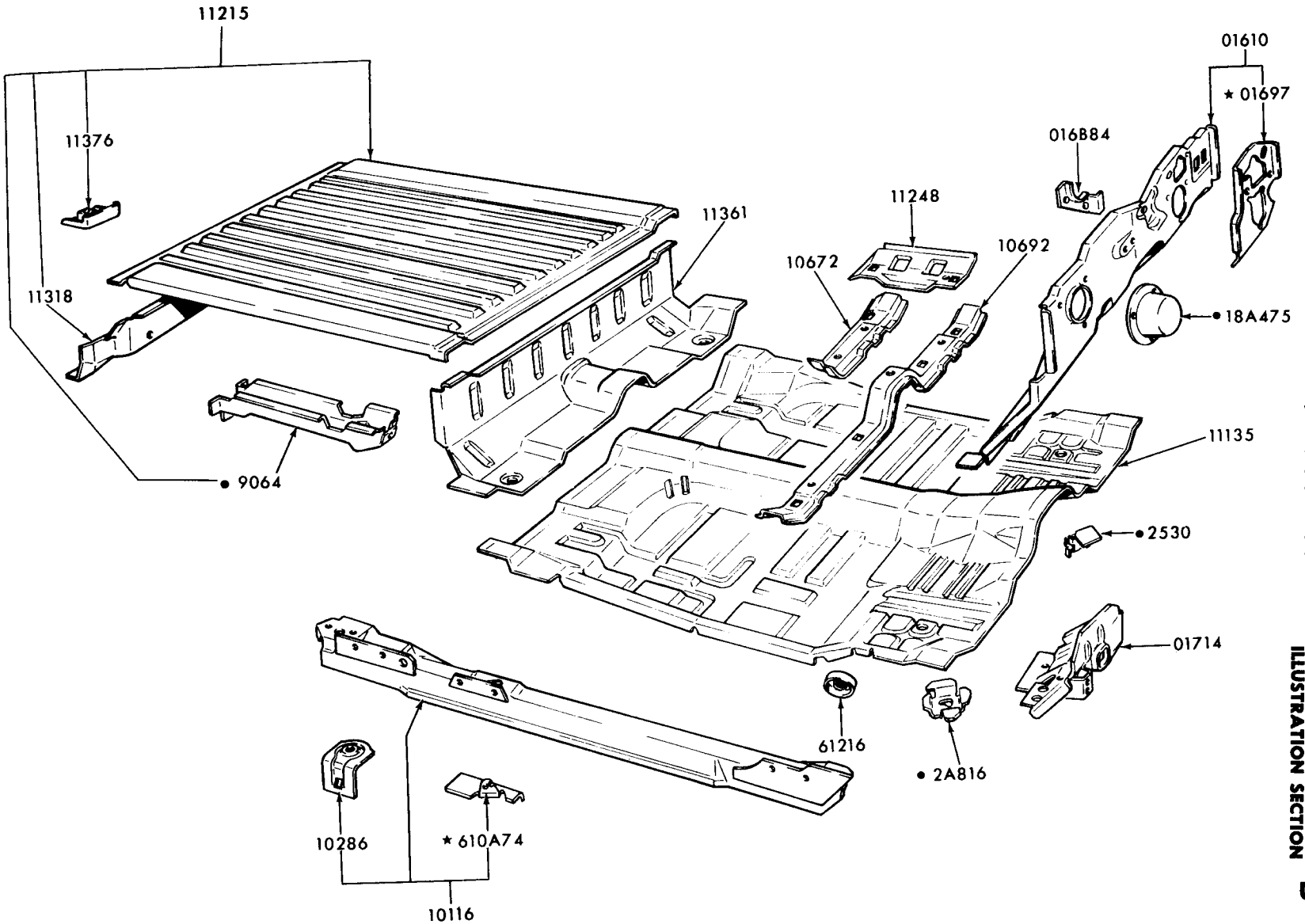


• REFER TO CHASSIS SECTION

P-8644


COPYRIGHT © 1975 — FORD MOTOR COMPANY — DEARBORN, MICHIGAN

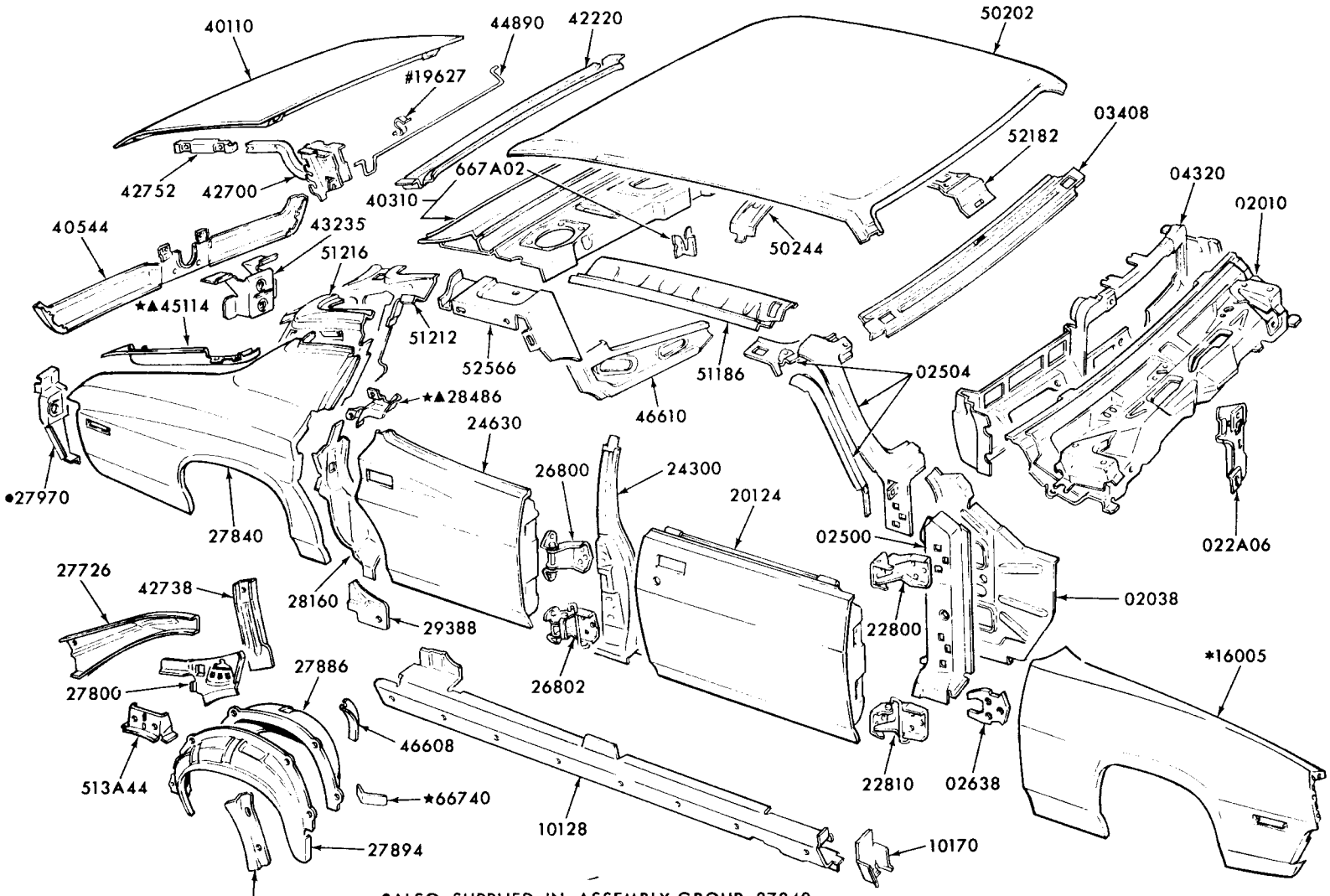


•ALSO SUPPLIED IN ASSEMBLY-GROUP 27840
*REFER TO GROUP IN CHASSIS SECTION
#REFER TO GROUP IN PAINT SECTION
▲SUPPLIED IN ASSEMBLY-GROUP 27840

P-8645

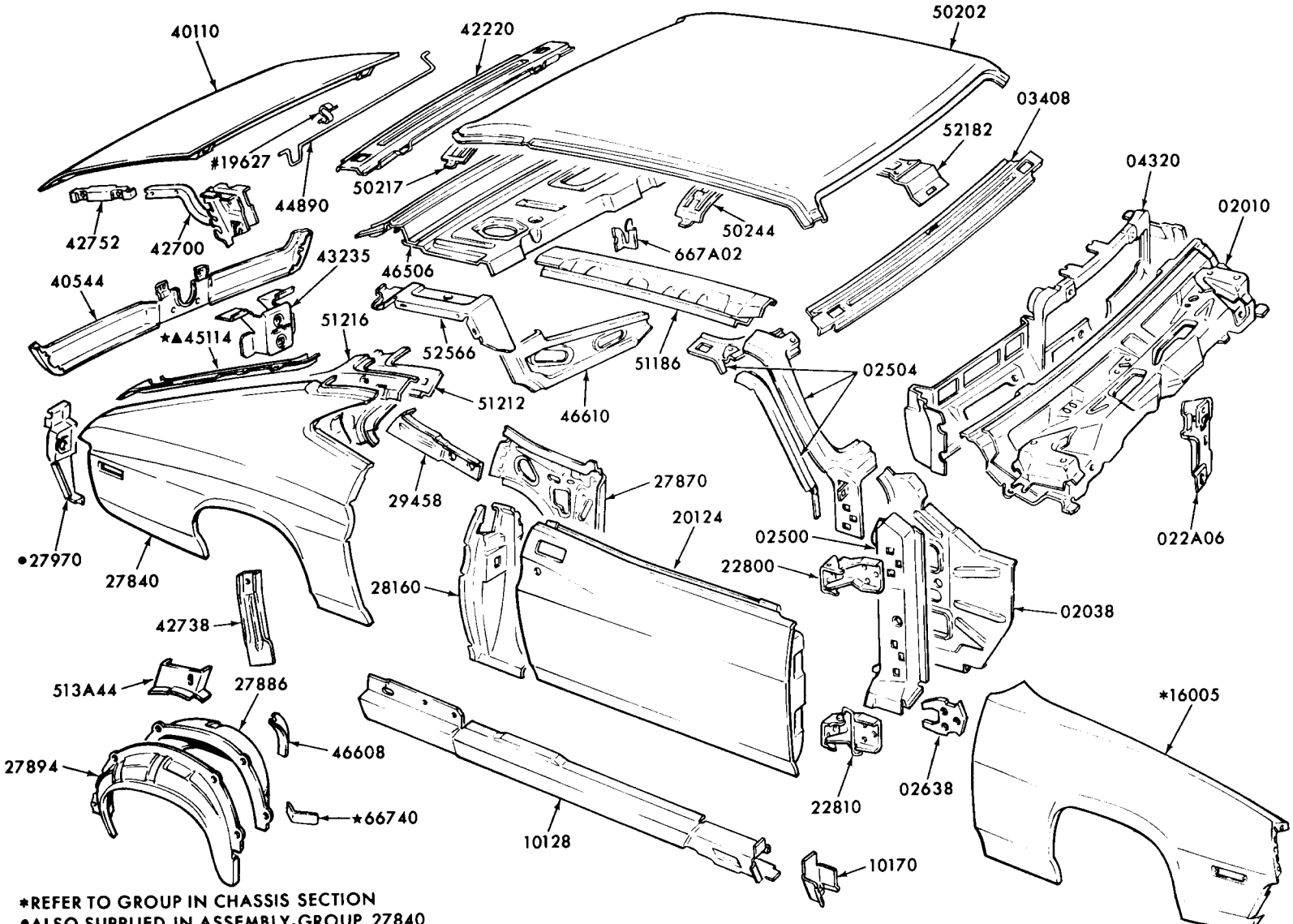


*REFER TO GROUP IN CHASSIS SECTION
•ALSO SUPPLIED IN ASSEMBLY-GROUP 27840
#REFER TO GROUP IN PAINT SECTION
▲SUPPLIED IN ASSEMBLY-GROUP 27840

P-8646


COPYRIGHT © 1975 — FORD MOTOR COMPANY — DEARBORN, MICHIGAN

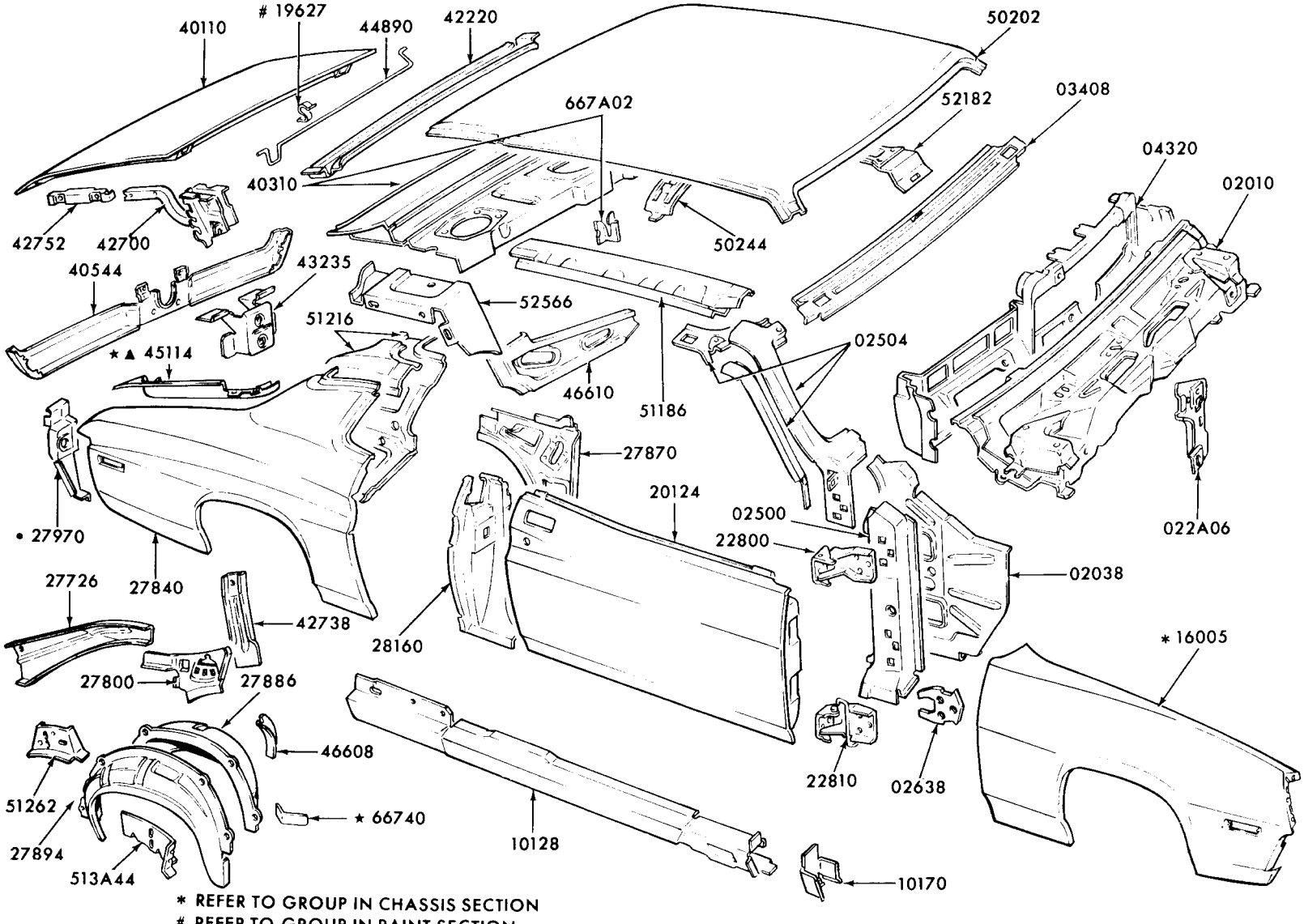


* REFER TO GROUP IN CHASSIS SECTION
\# REFER TO GROUP IN PAINT SECTION
• ALSO SUPPLIED IN ASSEMBLY-GROUP 27840
▲ SUPPLIED IN ASSEMBLY-GROUP 27840

P-8647

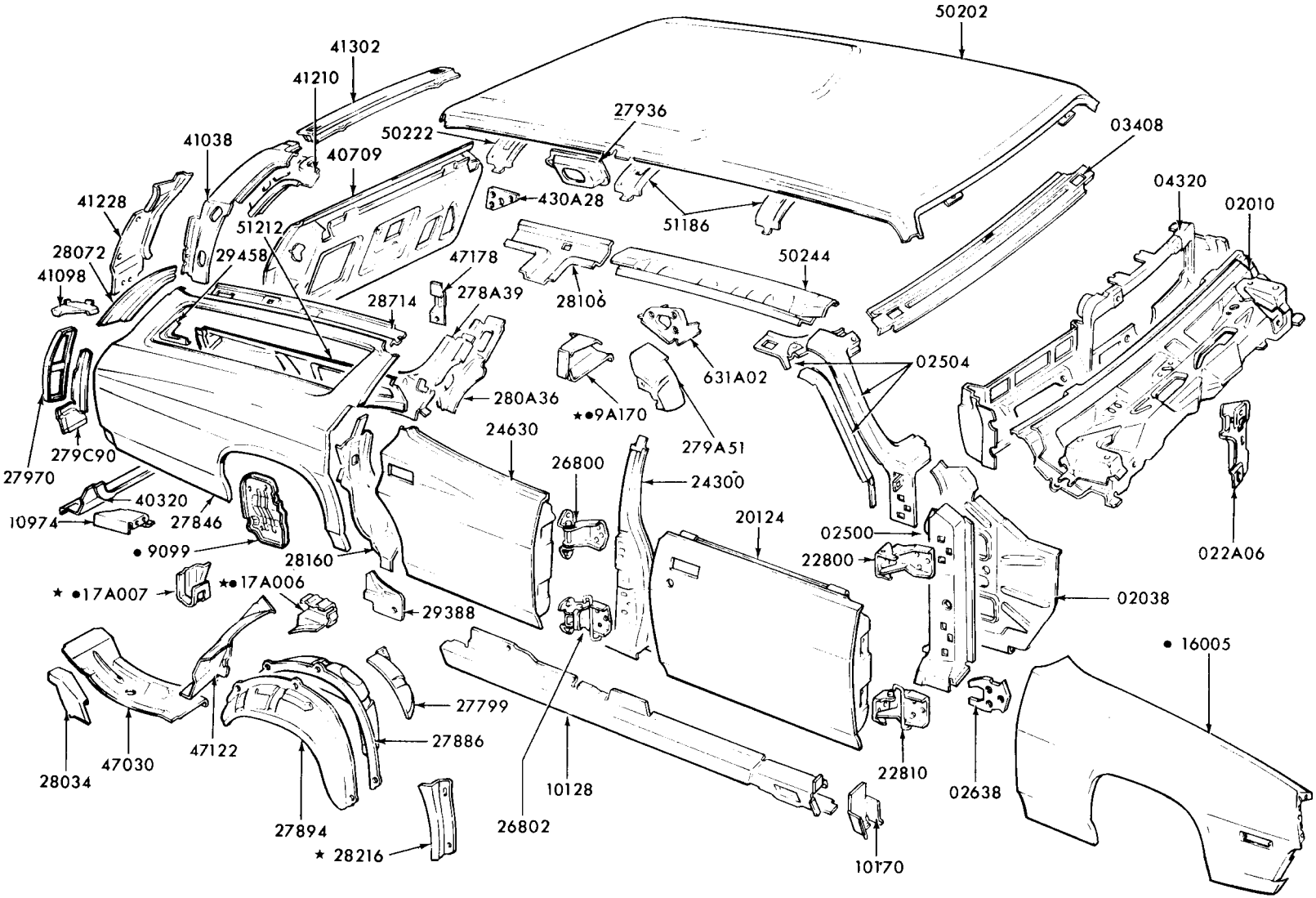


● REFER TO CHASSIS SECTION

P-8648


COPYRIGHT © 1975 — FORD MOTOR COMPANY — DEARBORN, MICHIGAN

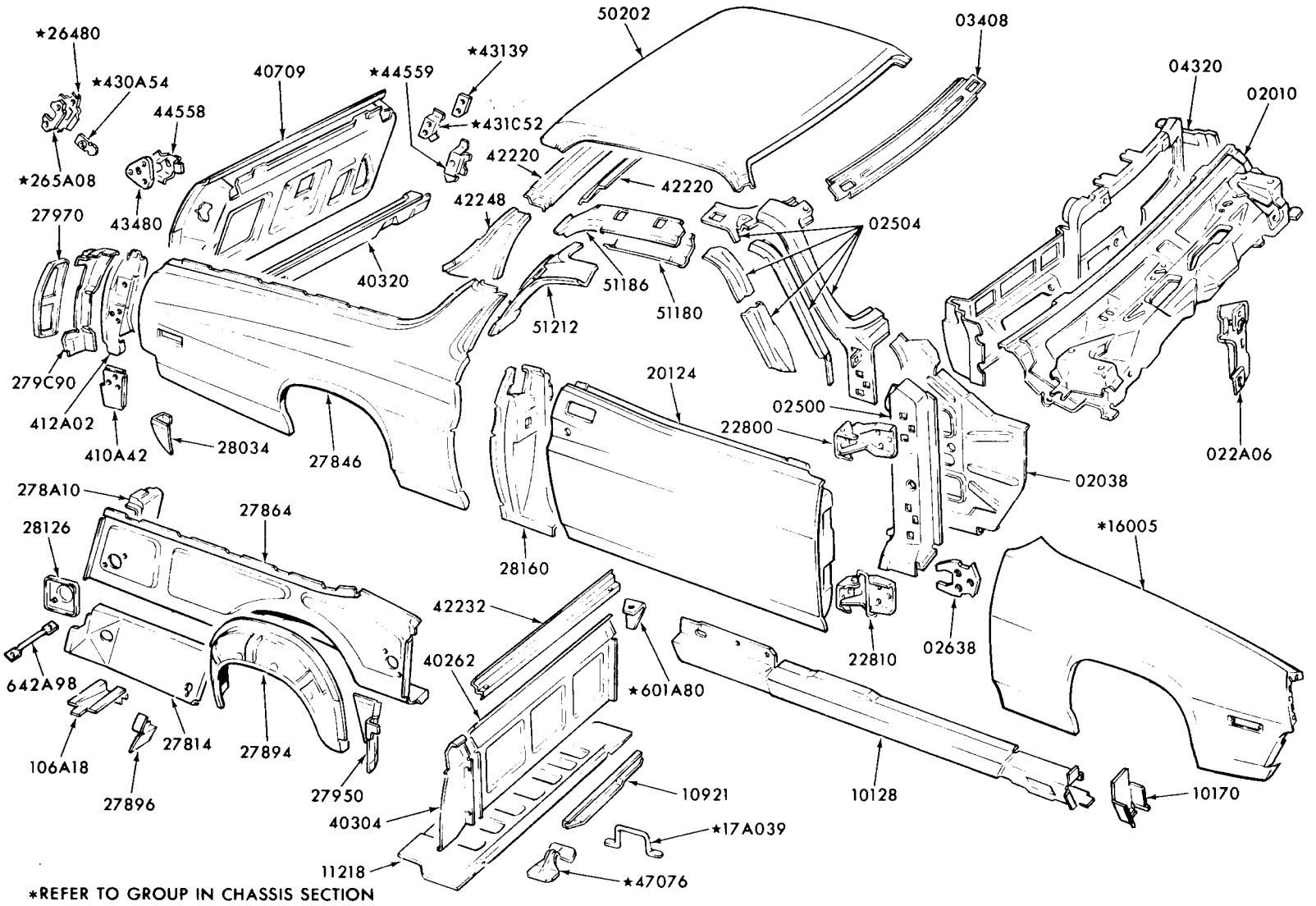


*REFER TO GROUP IN CHASSIS SECTION

P-8649

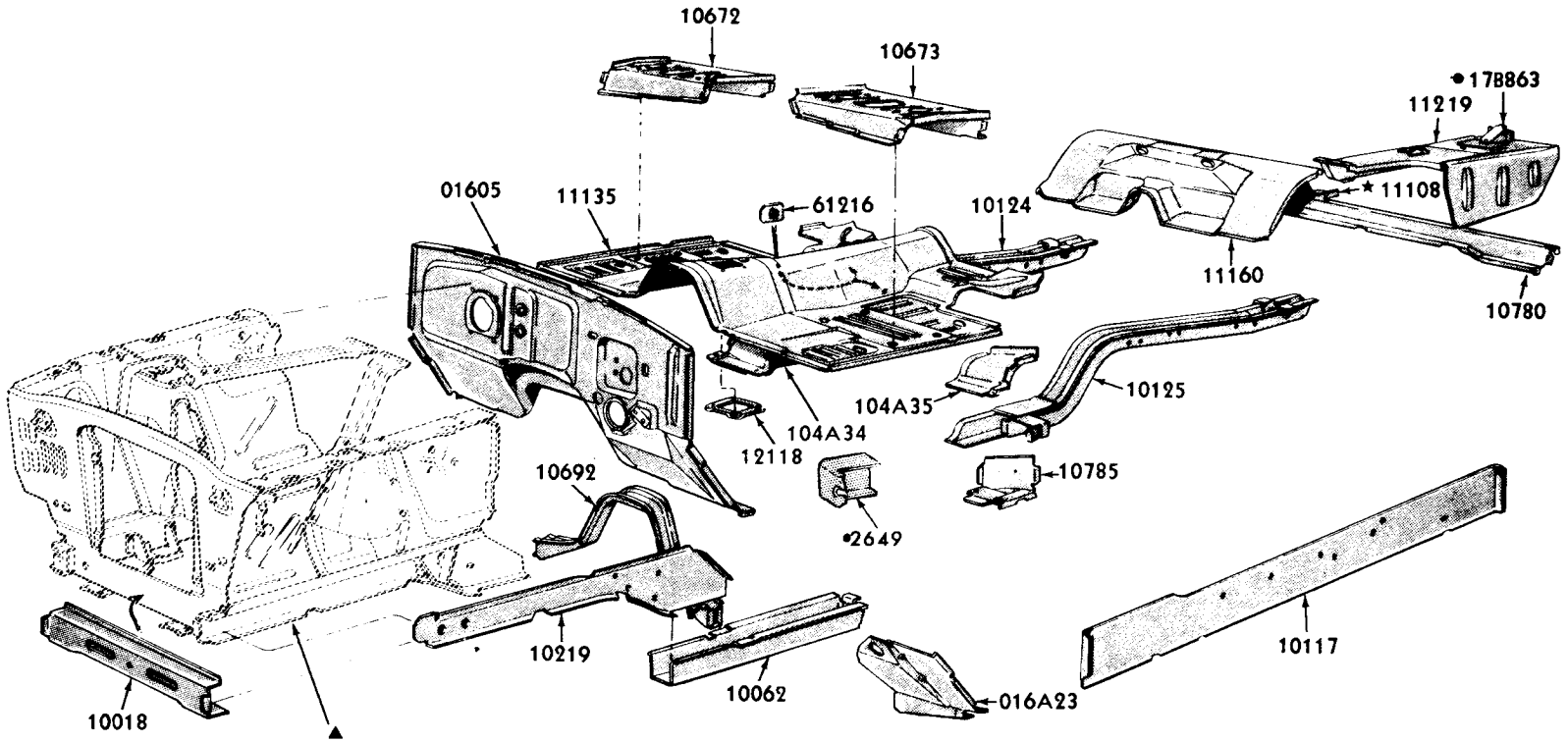


▲ REFER TO CHASSIS ILLUSTRATION SECTION 160 FOR EXPLODED VIEW INFORMATION

• REFER TO CHASSIS GROUP

P-4486


COPYRIGHT © 1975 — FORD MOTOR COMPANY — DEARBORN, MICHIGAN

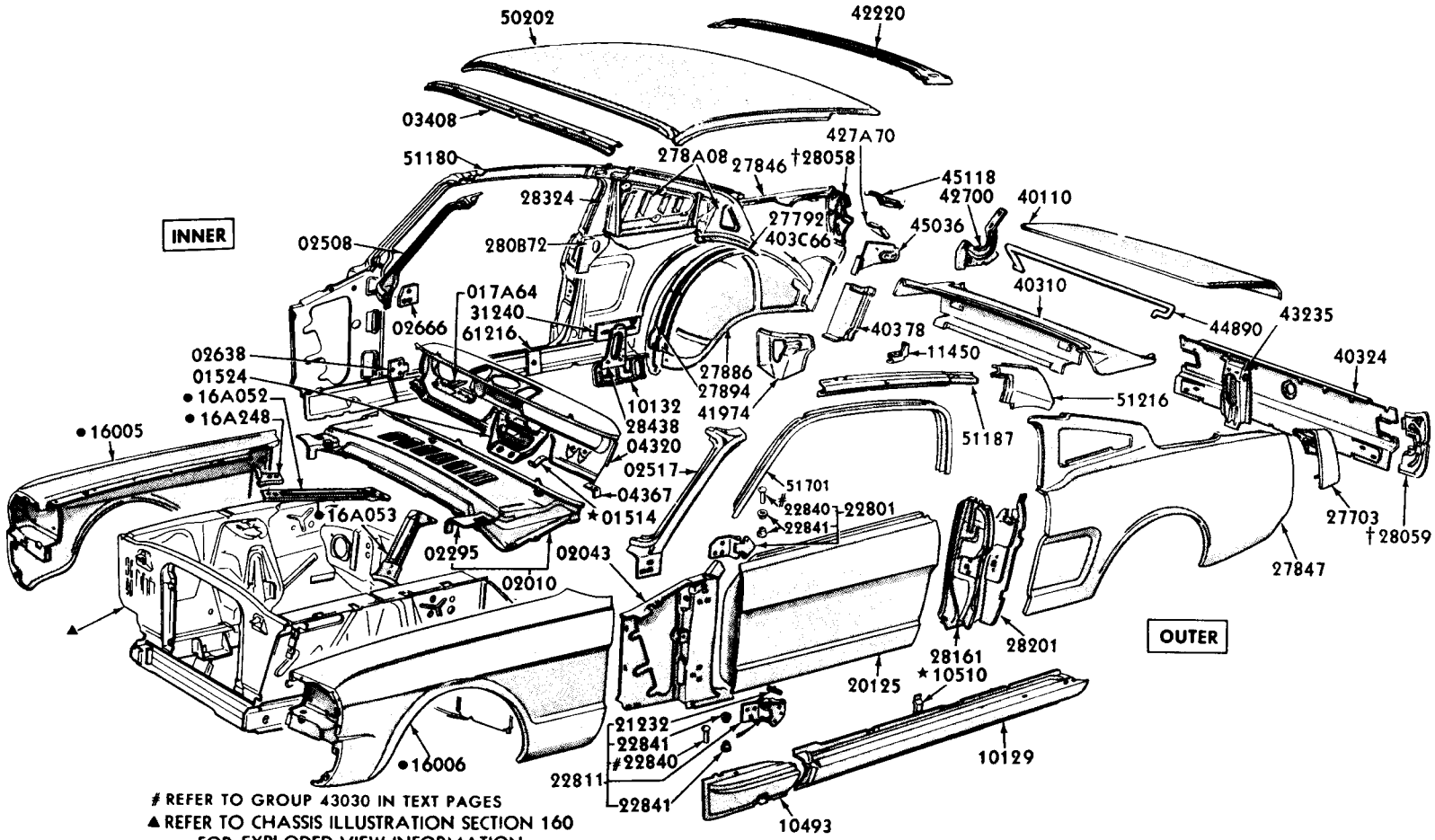


# REFER TO GROUP 43030 IN TEXT PAGES

▲ REFER TO CHASSIS ILLUSTRATION SECTION 160 FOR EXPLODED VIEW INFORMATION

● REFER TO CHASSIS GROUP

† ALSO INCLUDED IN 27846-7

P-4640

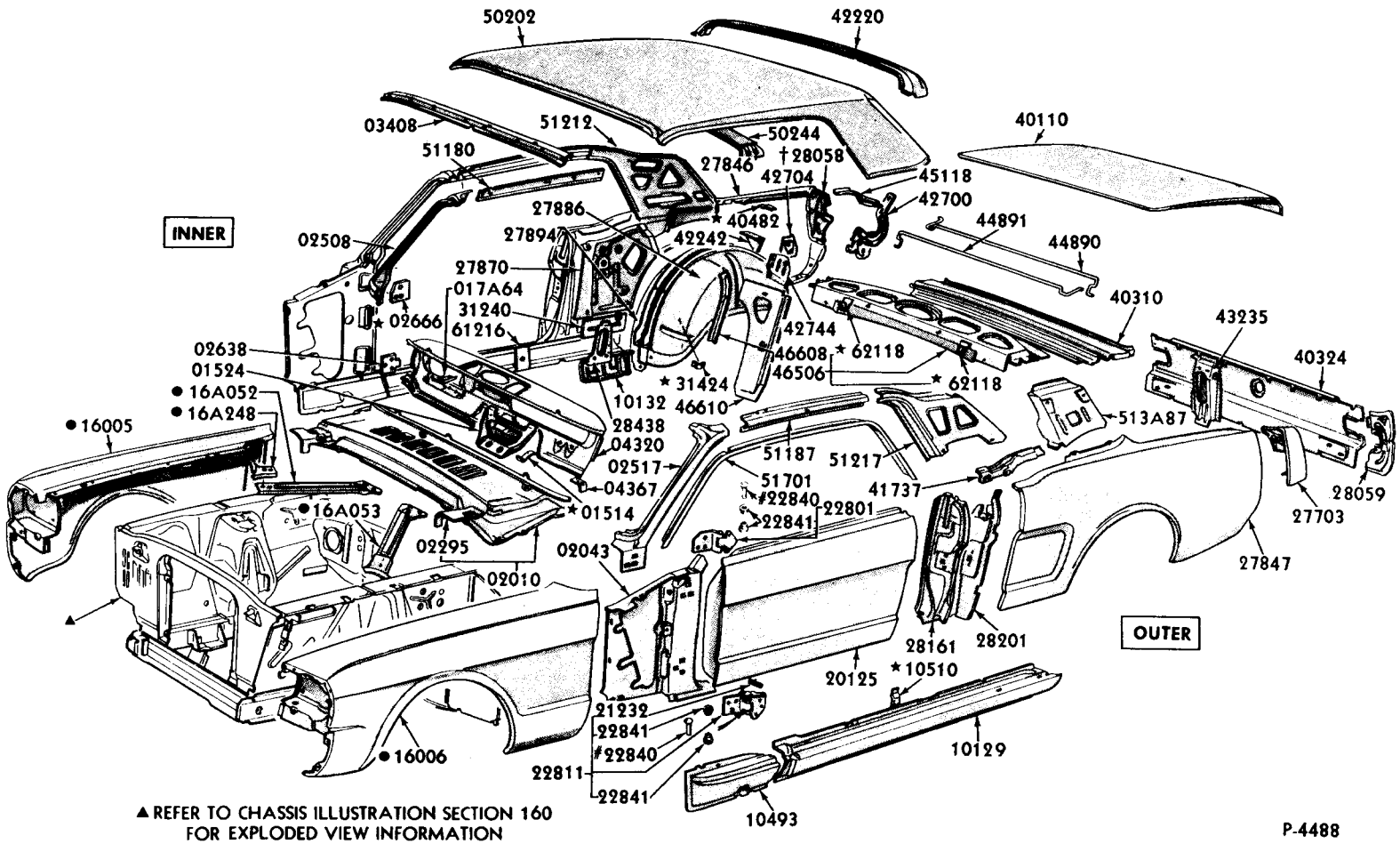


▲ REFER TO CHASSIS ILLUSTRATION SECTION 160 FOR EXPLODED VIEW INFORMATION

● REFER TO CHASSIS GROUP

† ALSO INCLUDED IN 27846-7

# REFER TO GROUP 43030 IN TEXT PAGES

P-4488


COPYRIGHT © 1975 — FORD MOTOR COMPANY — DEARBORN, MICHIGAN

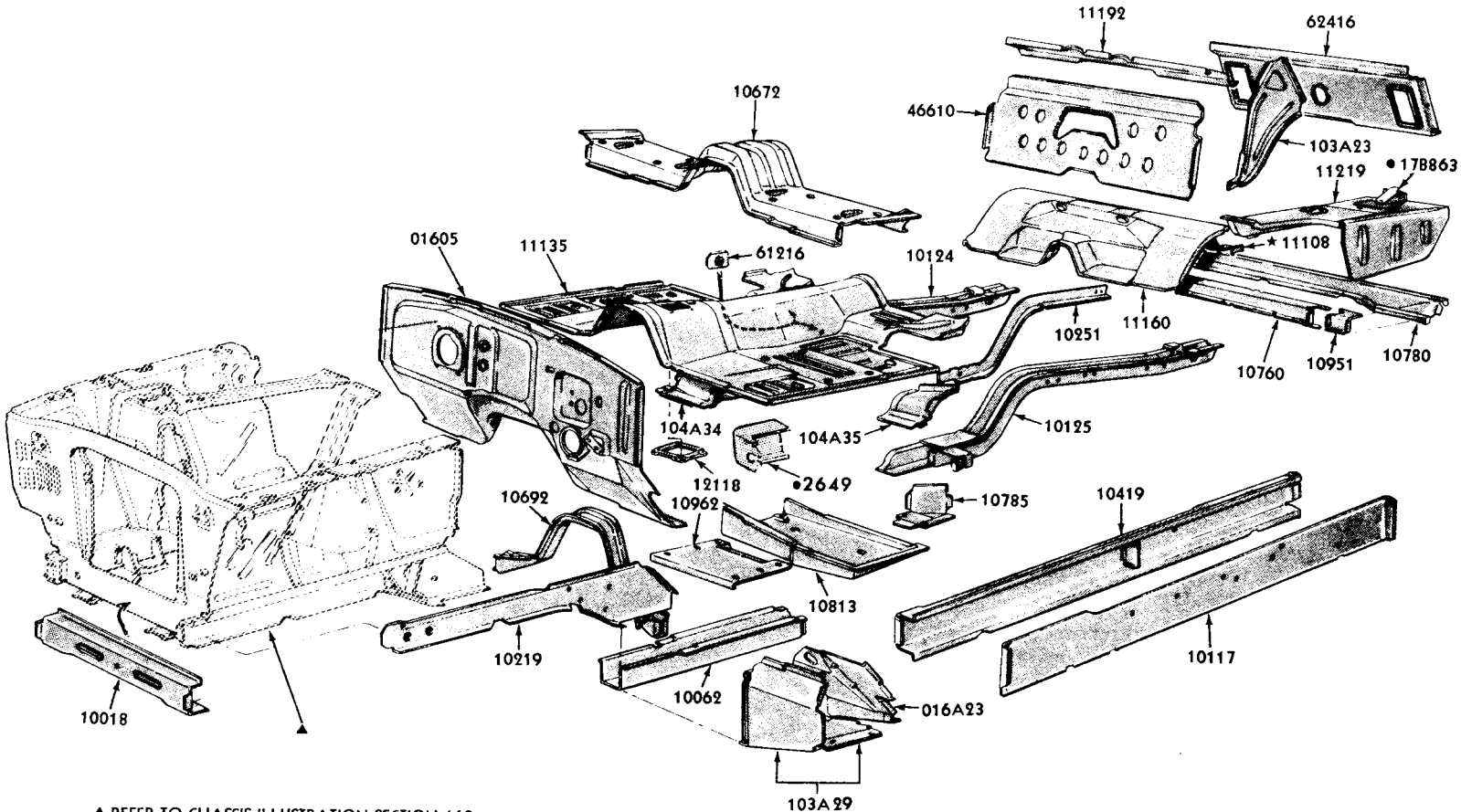


▲ REFER TO CHASSIS ILLUSTRATION SECTION 160 FOR EXPLODED VIEW INFORMATION

•REFER TO CHASSIS GROUP

P-4487

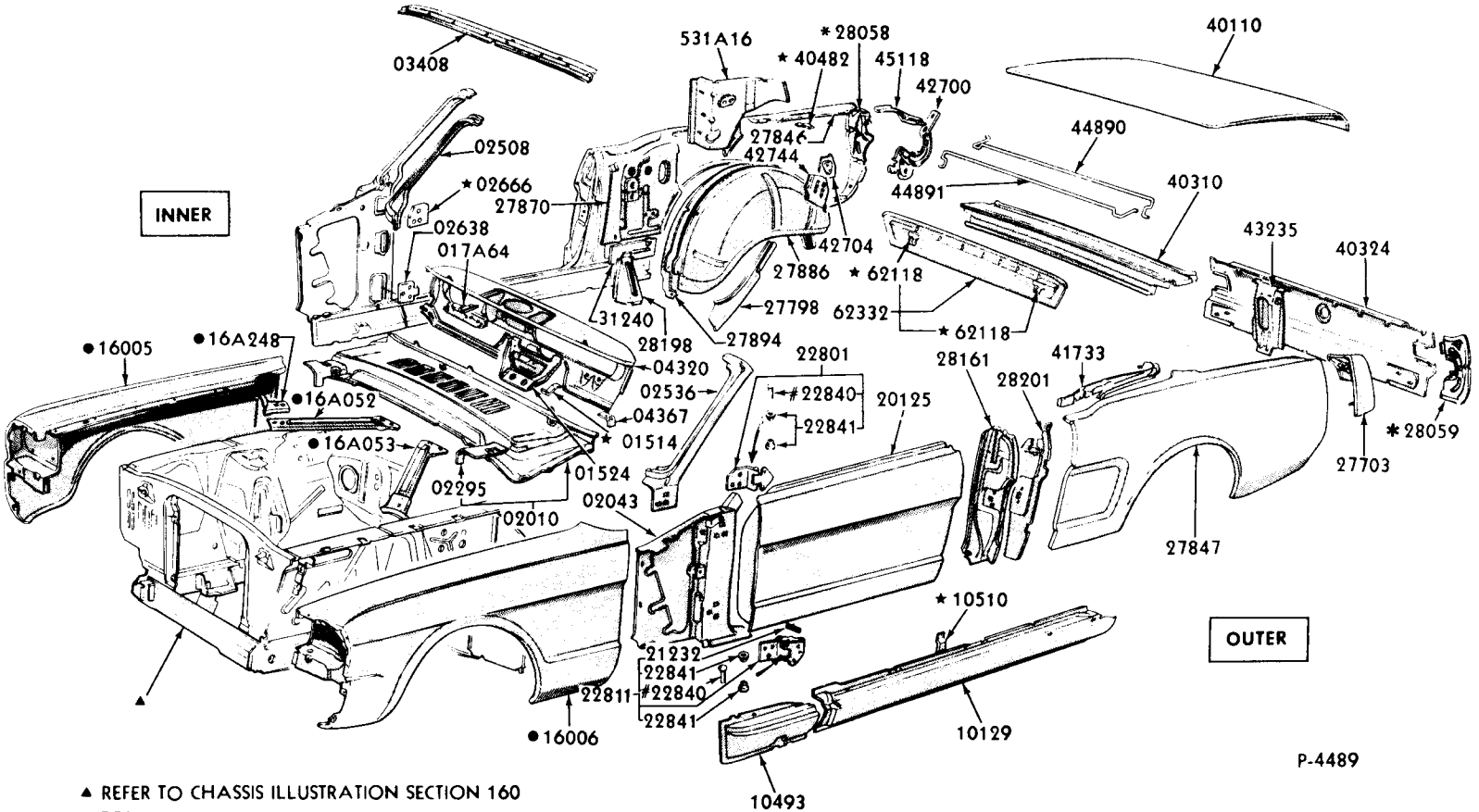


▲ REFER TO CHASSIS ILLUSTRATION SECTION 160 FOR EXPLODED VIEW INFORMATION
# REFER TO GROUP 43030 IN TEXT PAGES
● REFER TO CHASSIS GROUP
* ALSO INCLUDED IN 27846-7


COPYRIGHT © 1975 — FORD MOTOR COMPANY — DEARBORN, MICHIGAN

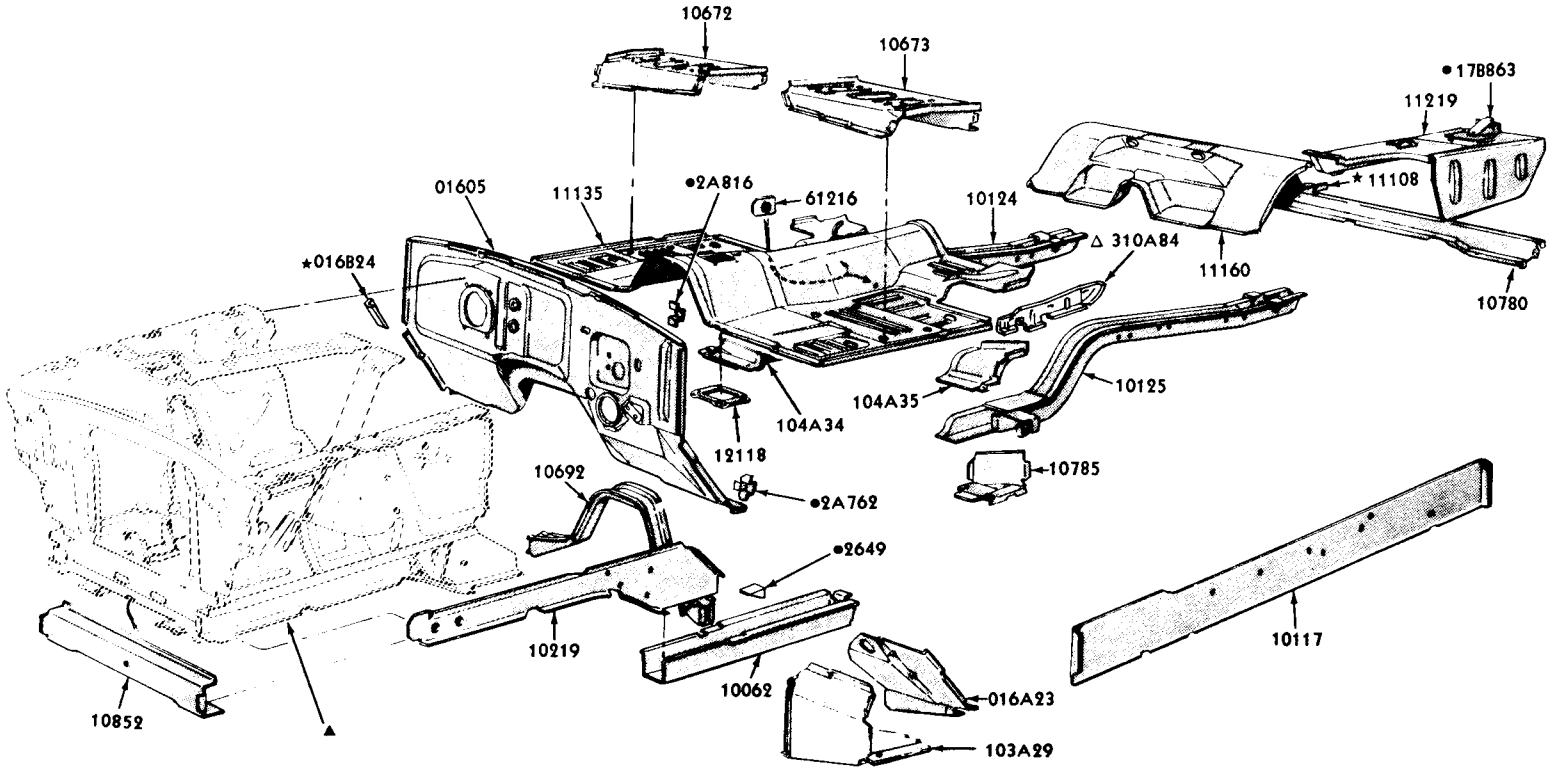


▲ REFER TO CHASSIS ILLUSTRATION SECTION 160
FOR EXPLODED VIEW INFORMATION
• REFER TO CHASSIS GROUP
Δ USED ON BODY TYPE F (63) ONLY

P-5466

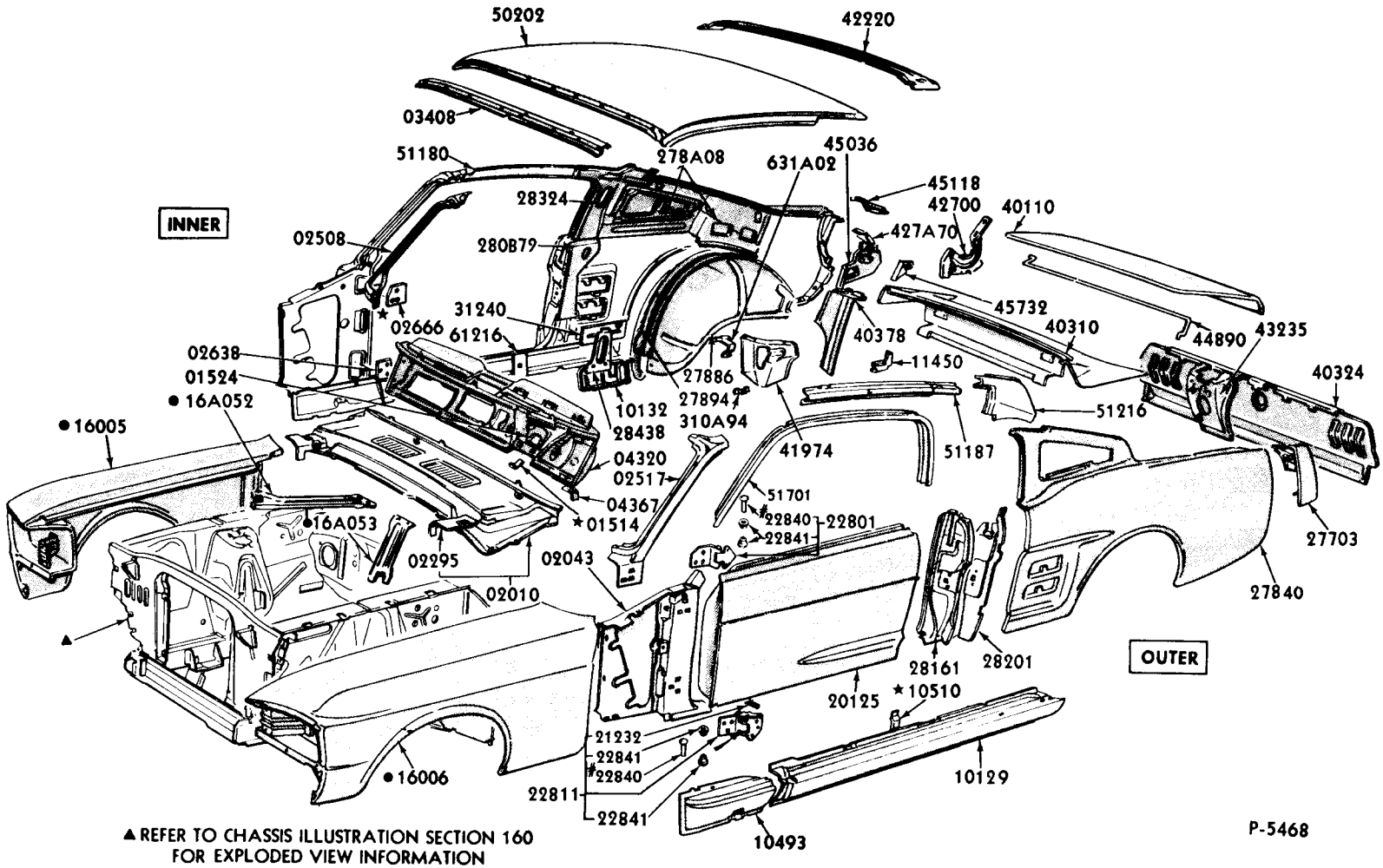


▲ REFER TO CHASSIS ILLUSTRATION SECTION 160 FOR EXPLODED VIEW INFORMATION

● REFER TO CHASSIS GROUP

# REFER TO GROUP 43030 IN TEXT PAGES


COPYRIGHT © 1975 — FORD MOTOR COMPANY — DEARBORN, MICHIGAN

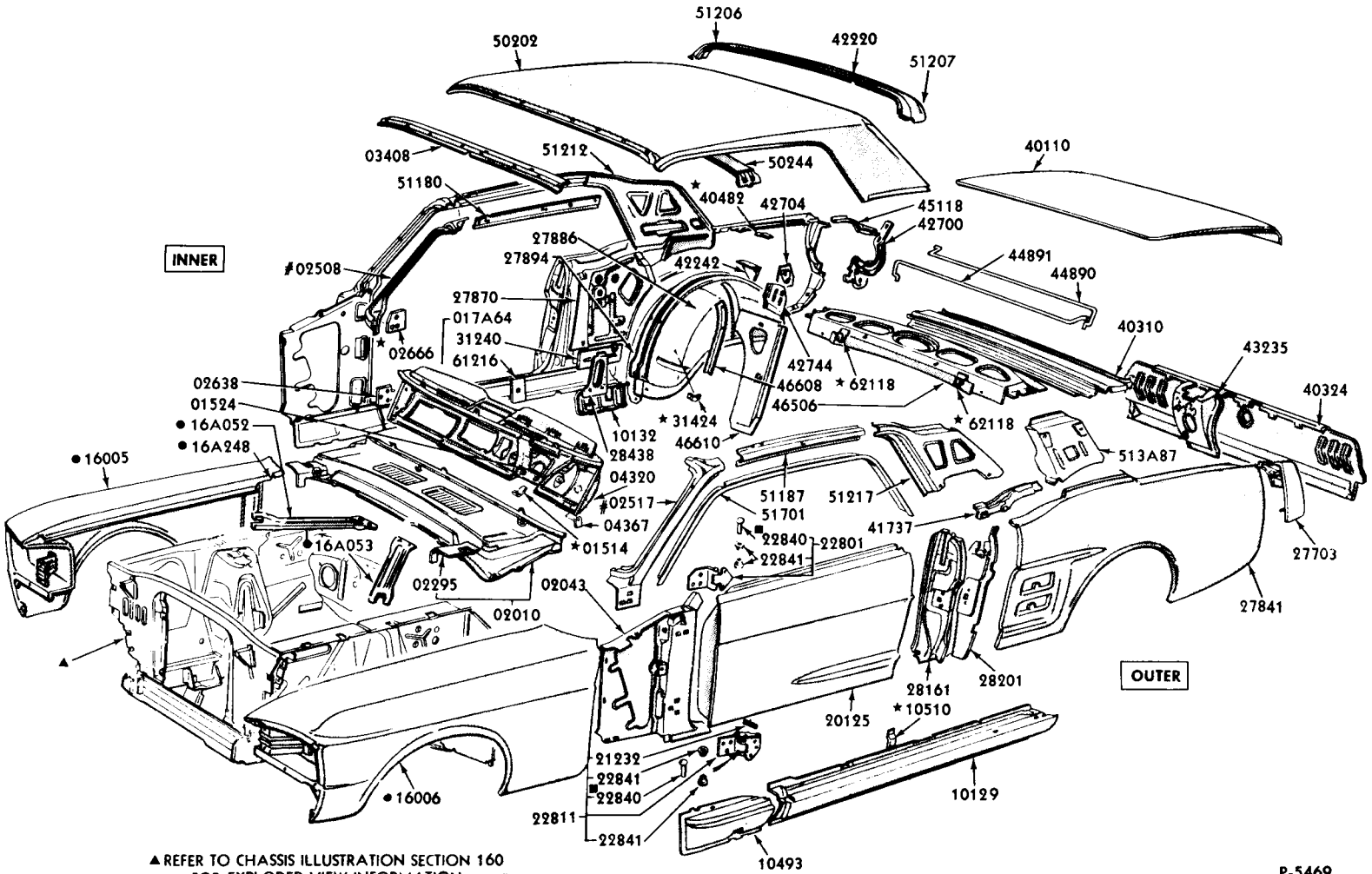


▲ REFER TO CHASSIS ILLUSTRATION SECTION 160 FOR EXPLODED VIEW INFORMATION

● REFER TO CHASSIS GROUP

# FOR 1969 USE BASIC 02504-5

■ REFER TO GROUP 43030 IN TEXT PAGES

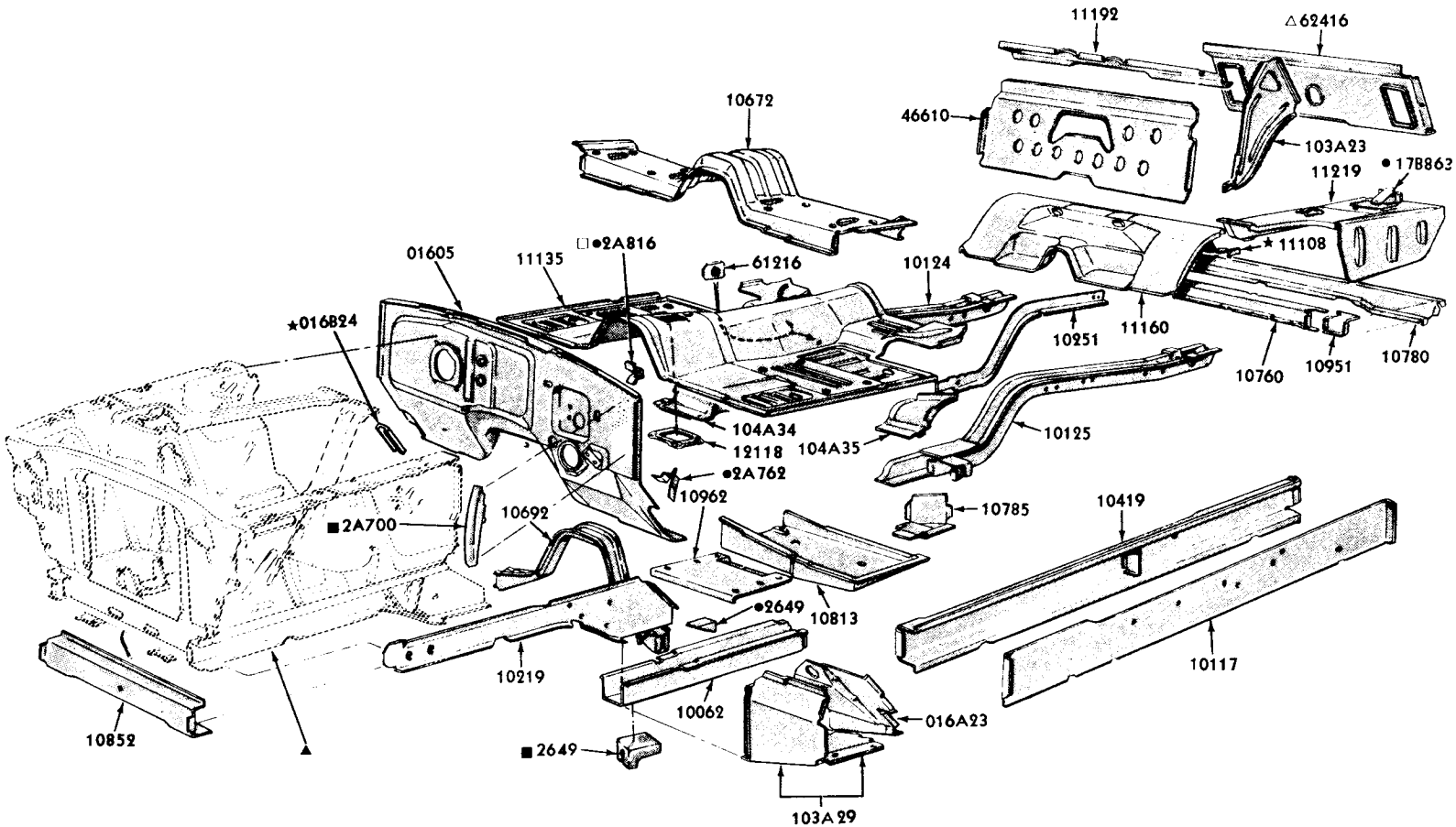


▲ REFER TO CHASSIS ILLUSTRATION SECTION 160 FOR EXPLODED VIEW INFORMATION

● REFER TO CHASSIS GROUP

■ 1969

△ 1967/68 MUSTANG & 1969 COUGAR

□ 1967/68 MUSTANG

P-5467


COPYRIGHT © 1975 — FORD MOTOR COMPANY — DEARBORN, MICHIGAN

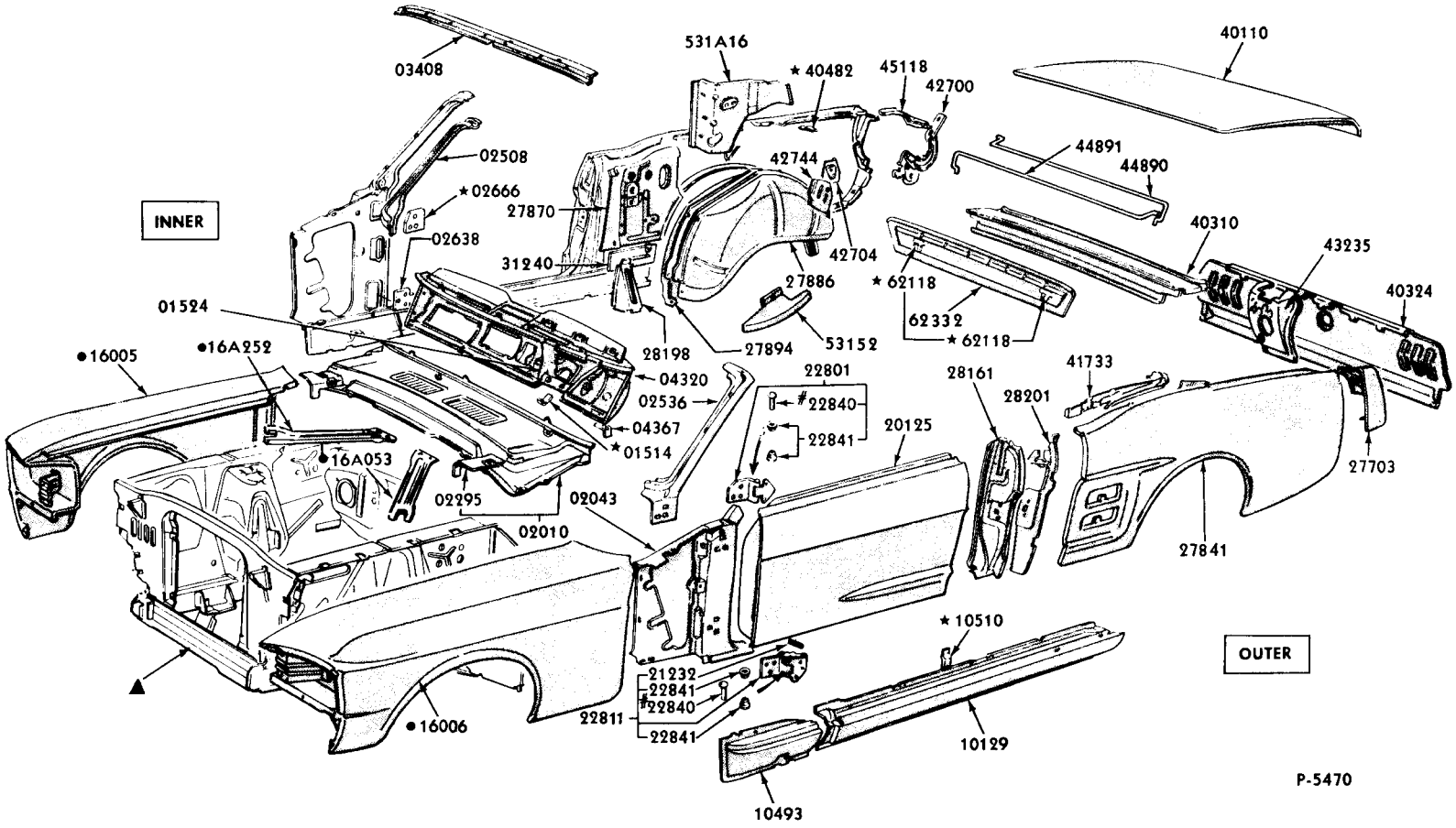


▲ REFER TO CHASSIS ILLUSTRATION SECTION 160 FOR EXPLODED VIEW INFORMATION
# REFER TO GROUP 43030 IN TEXT PAGES
● REFER TO CHASSIS GROUP

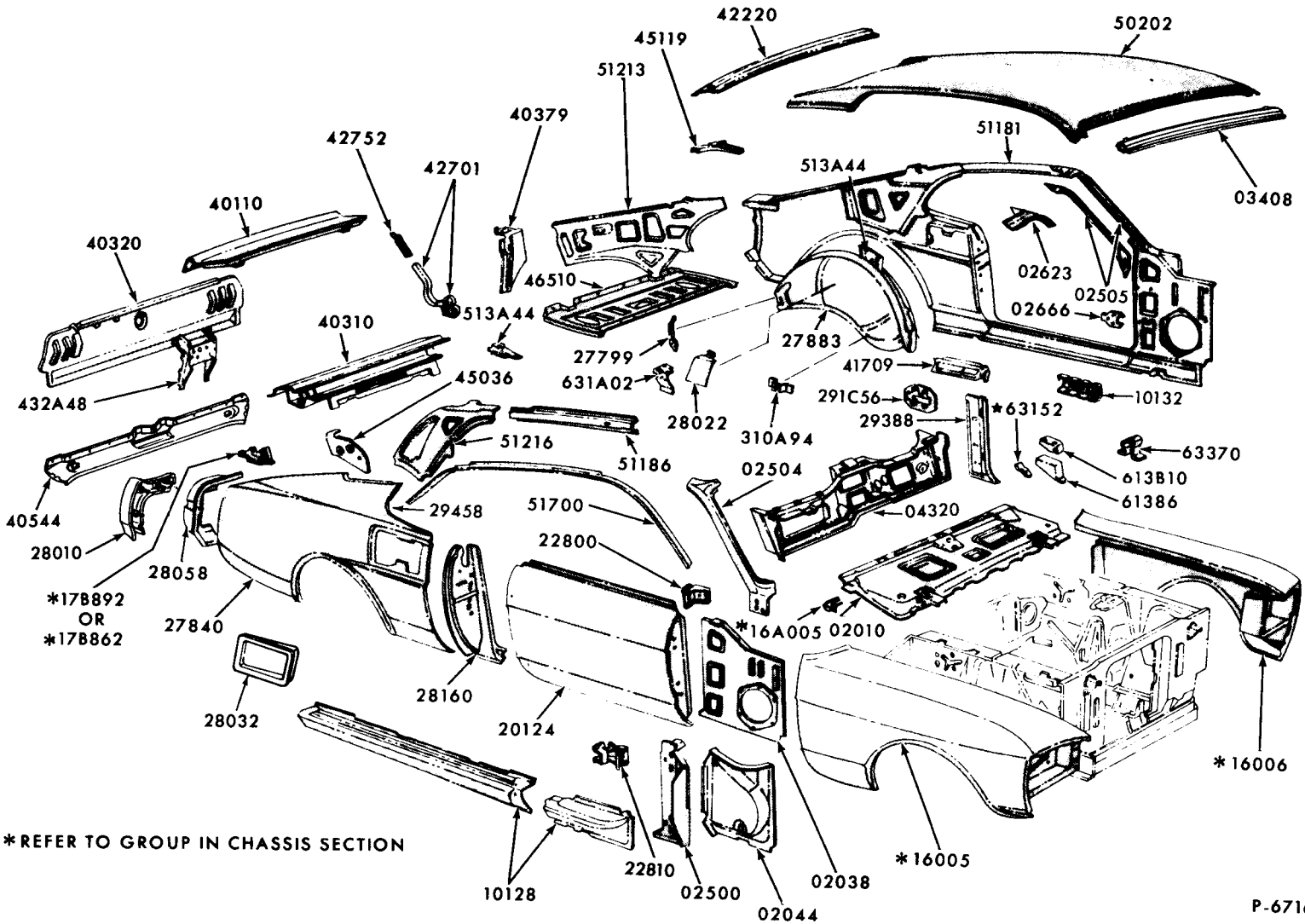



COPYRIGHT © 1975— FORD MOTOR COMPANY —DEARBORN, MICHIGAN

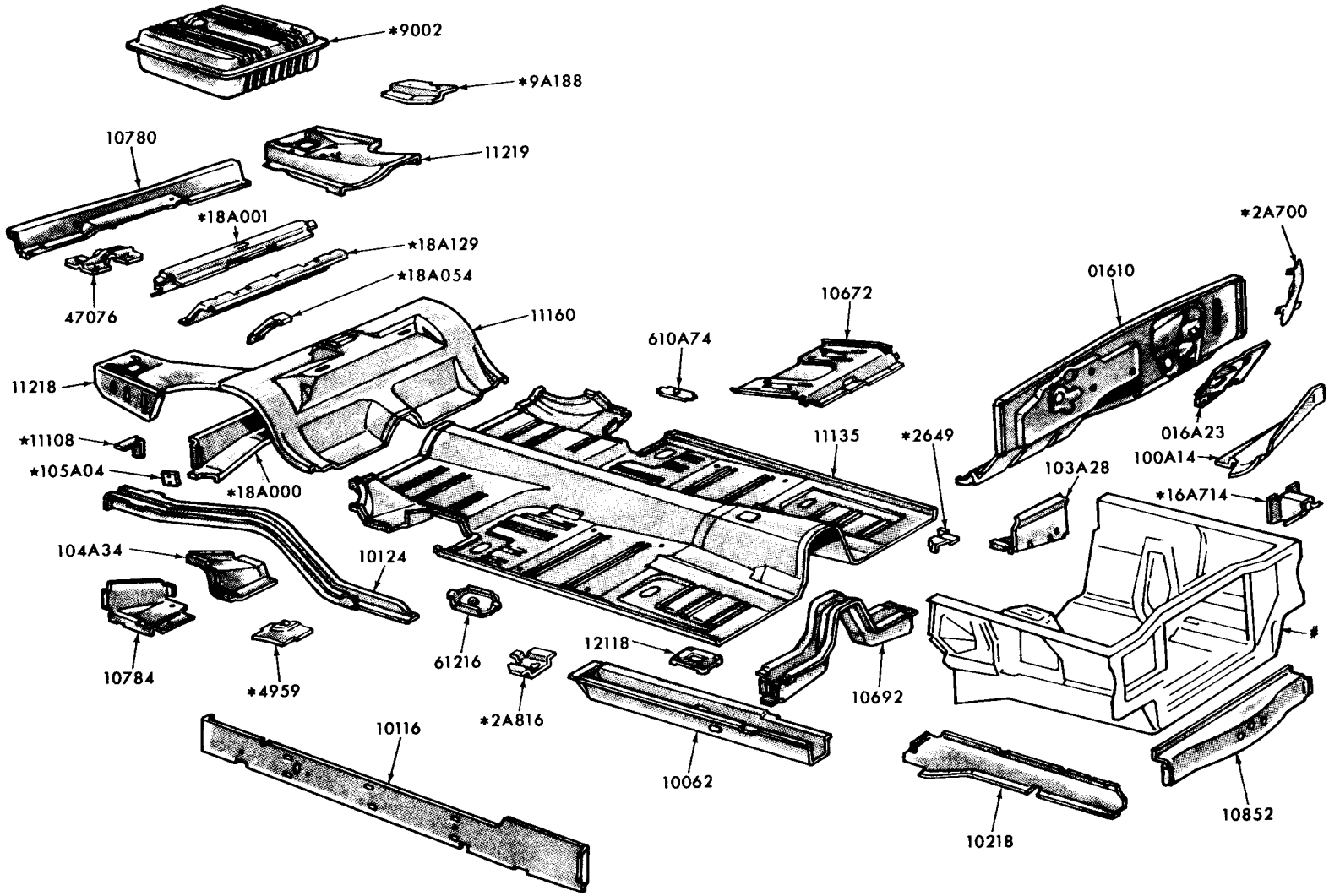


#REFER TO ILLUSTRATION SECTION 160 FOR DETAILS
*REFER TO CHASSIS SECTION

P-7271

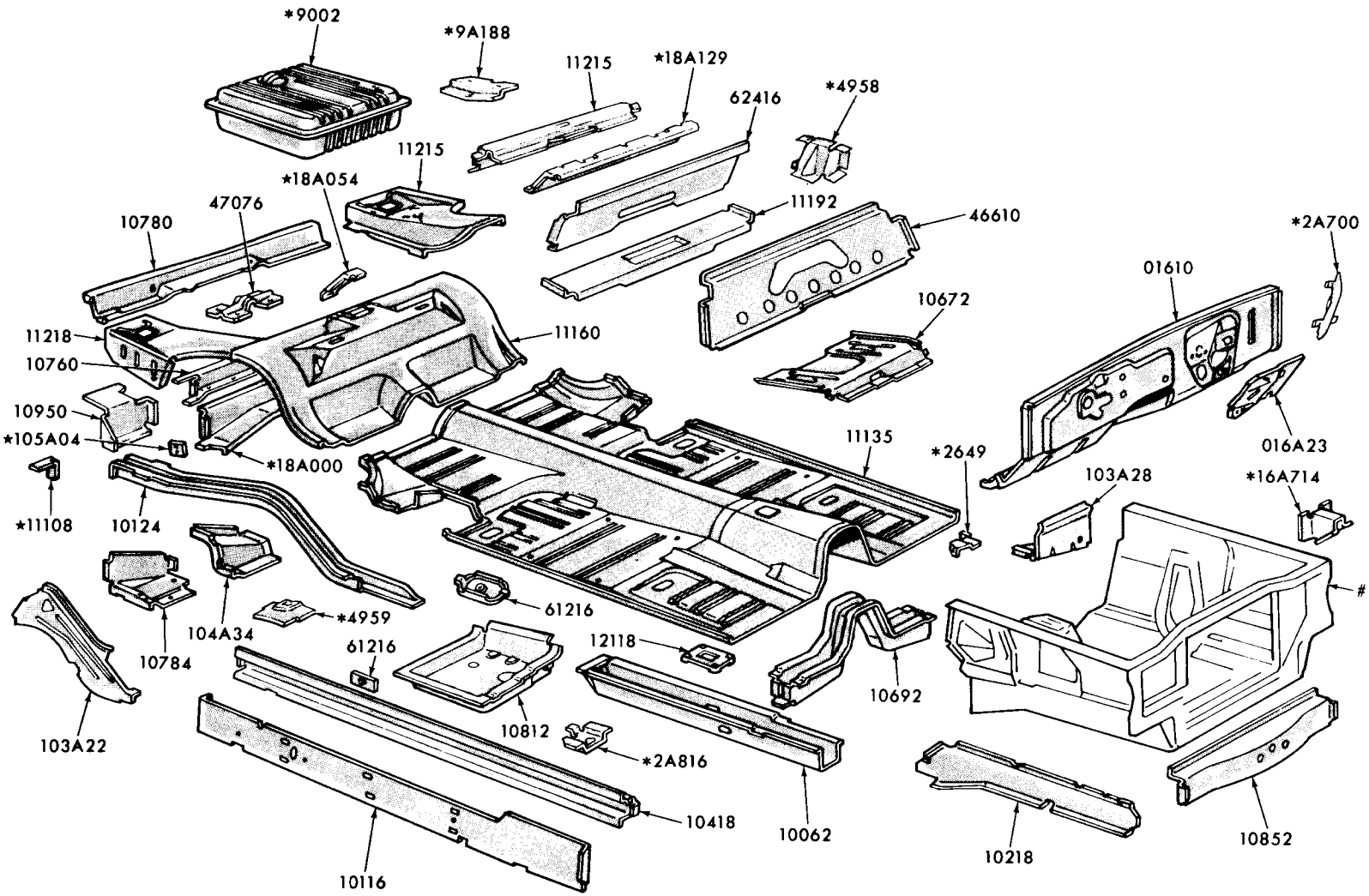


*REFER TO GROUP IN CHASSIS SECTION
#REFER TO ILLUSTRATION SECTION 160 FOR DETAILS

P-7272


COPYRIGHT © 1975 — FORD MOTOR COMPANY — DEARBORN, MICHIGAN

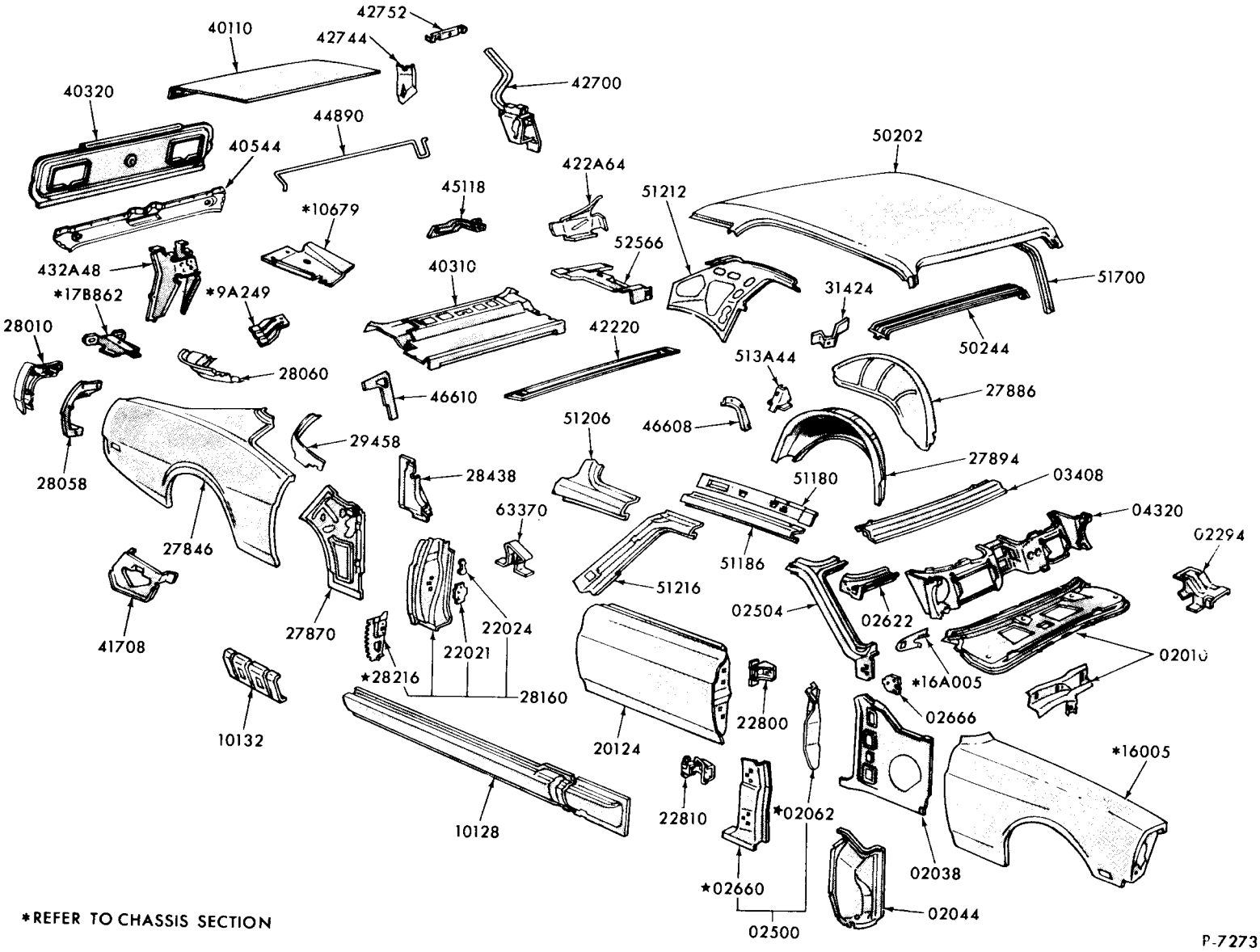


*REFER TO CHASSIS SECTION

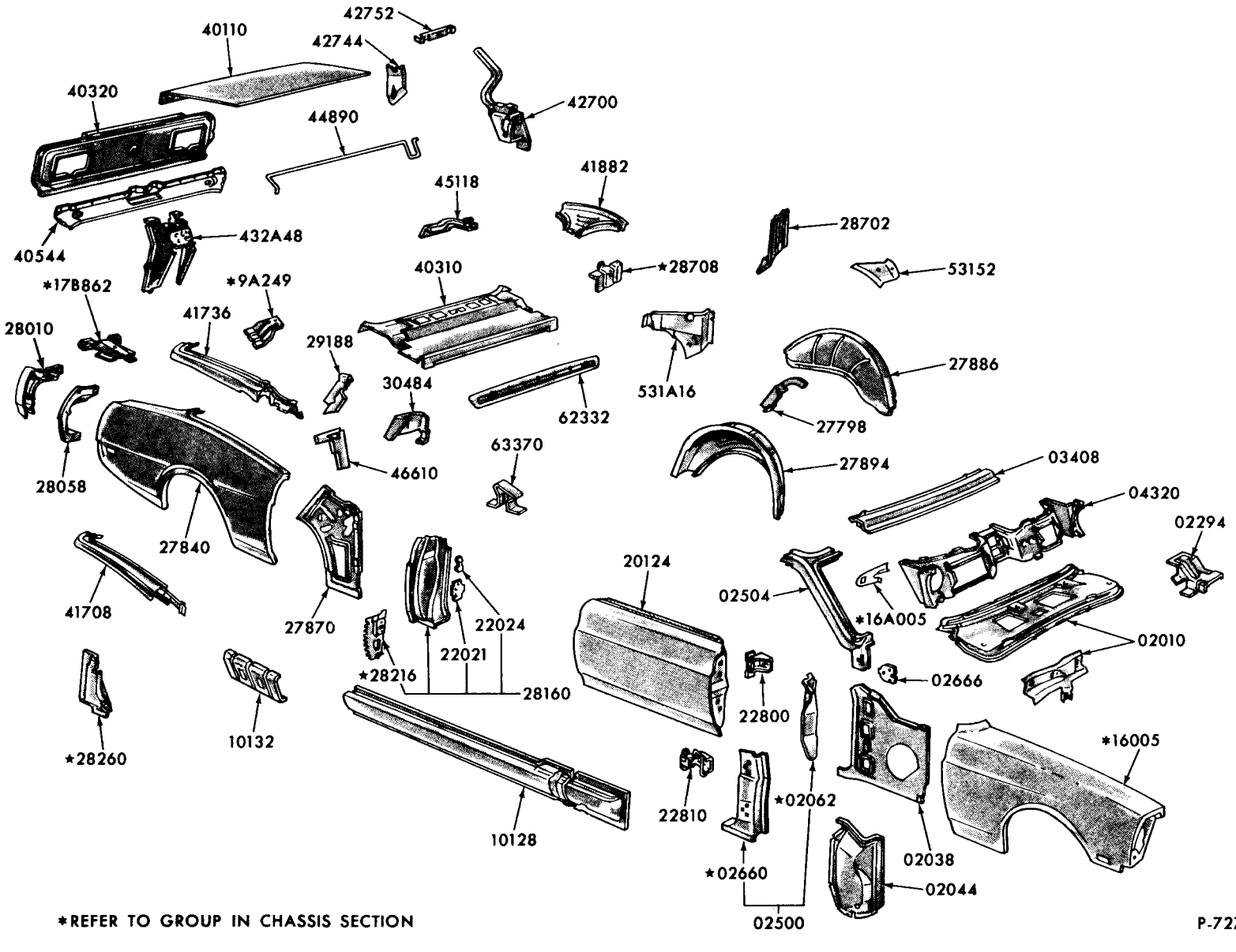



COPYRIGHT © 1975 — FORD MOTOR COMPANY — DEARBORN, MICHIGAN

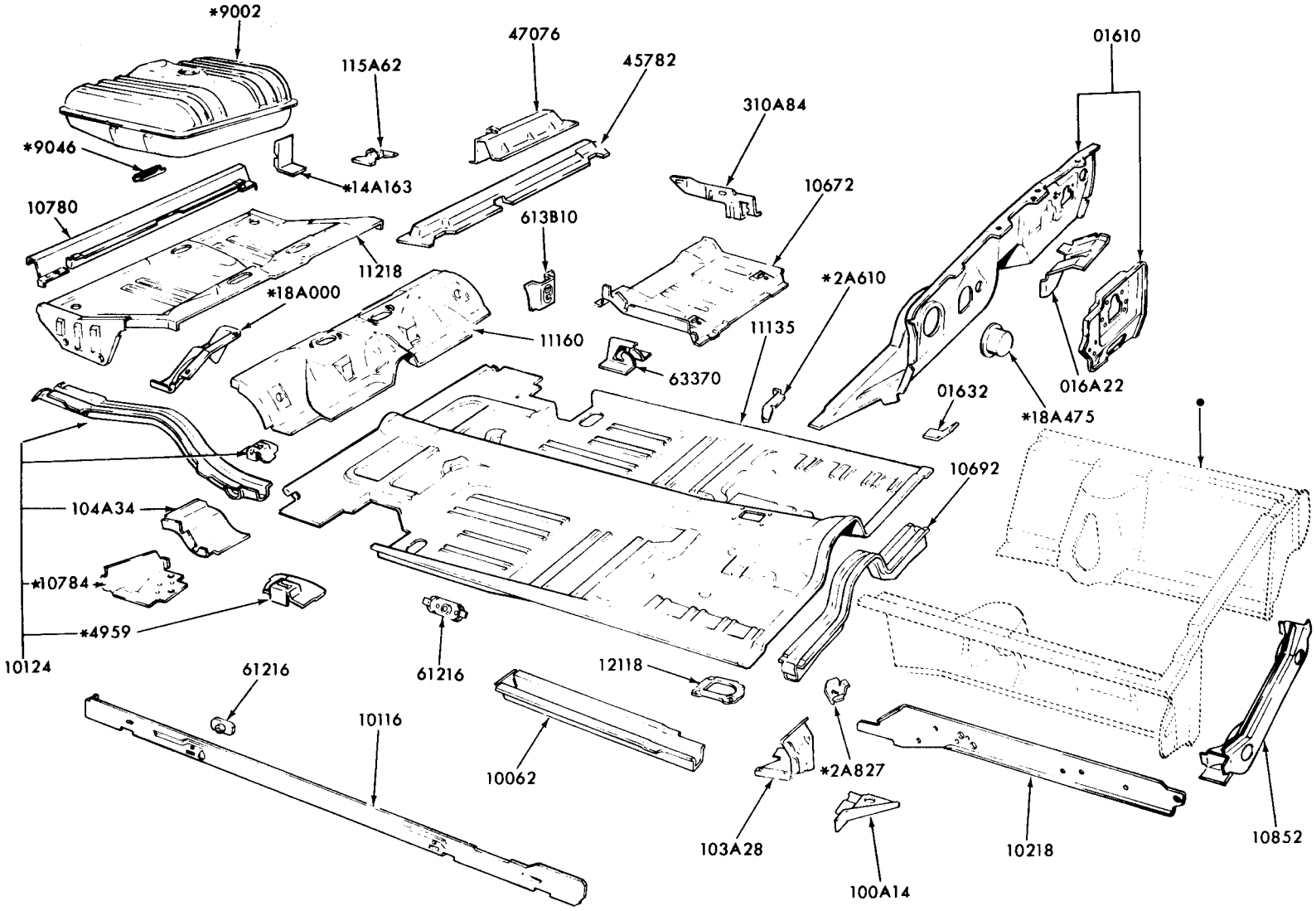


*REFER TO GROUP IN CHASSIS SECTION
•REFER TO ILLUSTRATION SECTION 160 FOR DETAILS

P-7877

COPYRIGHT © 1975 — FORD MOTOR COMPANY — DEARBORN, MICHIGAN







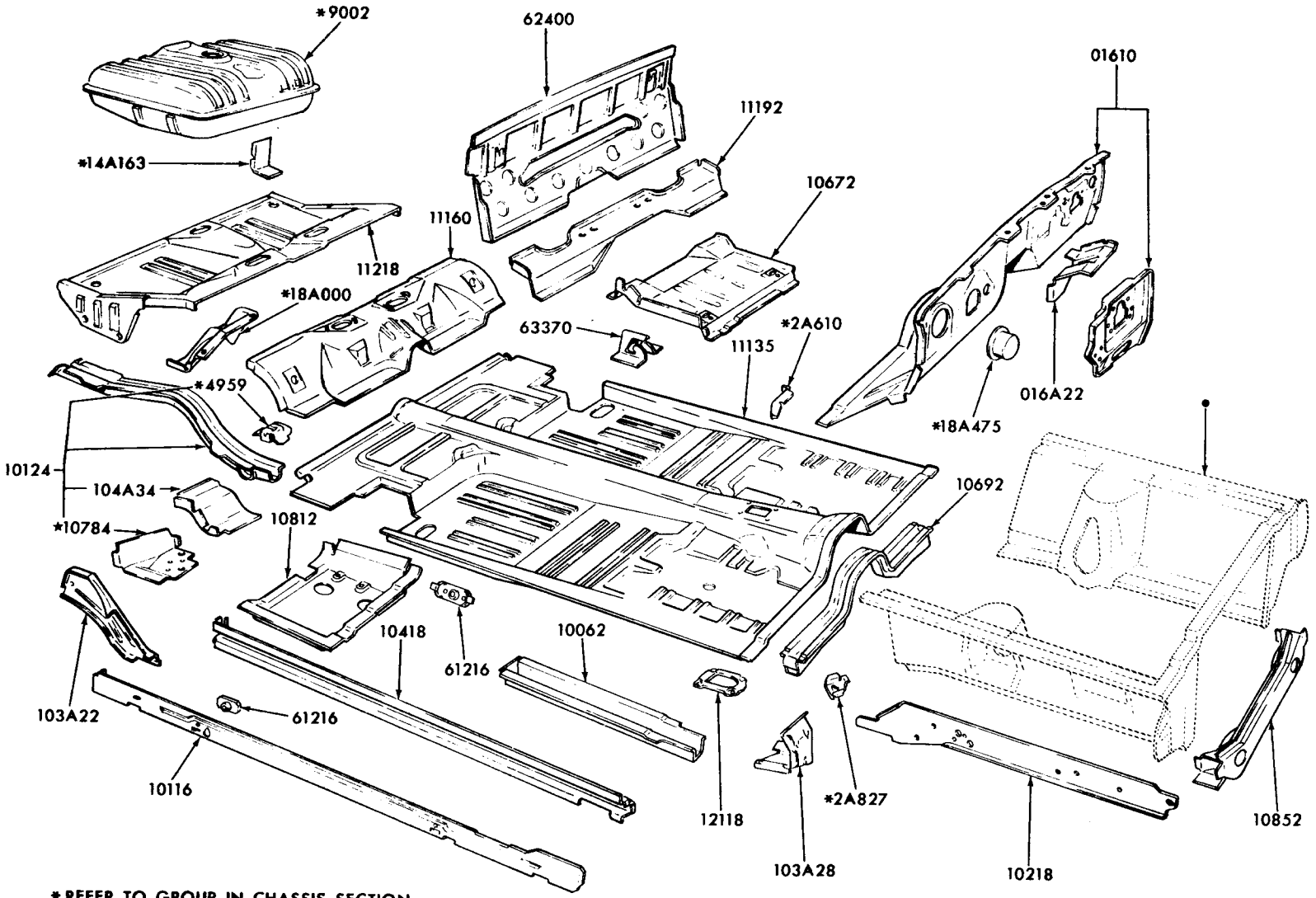


* REFER TO GROUP IN CHASSIS SECTION
• REFER TO ILLUSTRATION SECTION 160 FOR DETAILS

P-7878

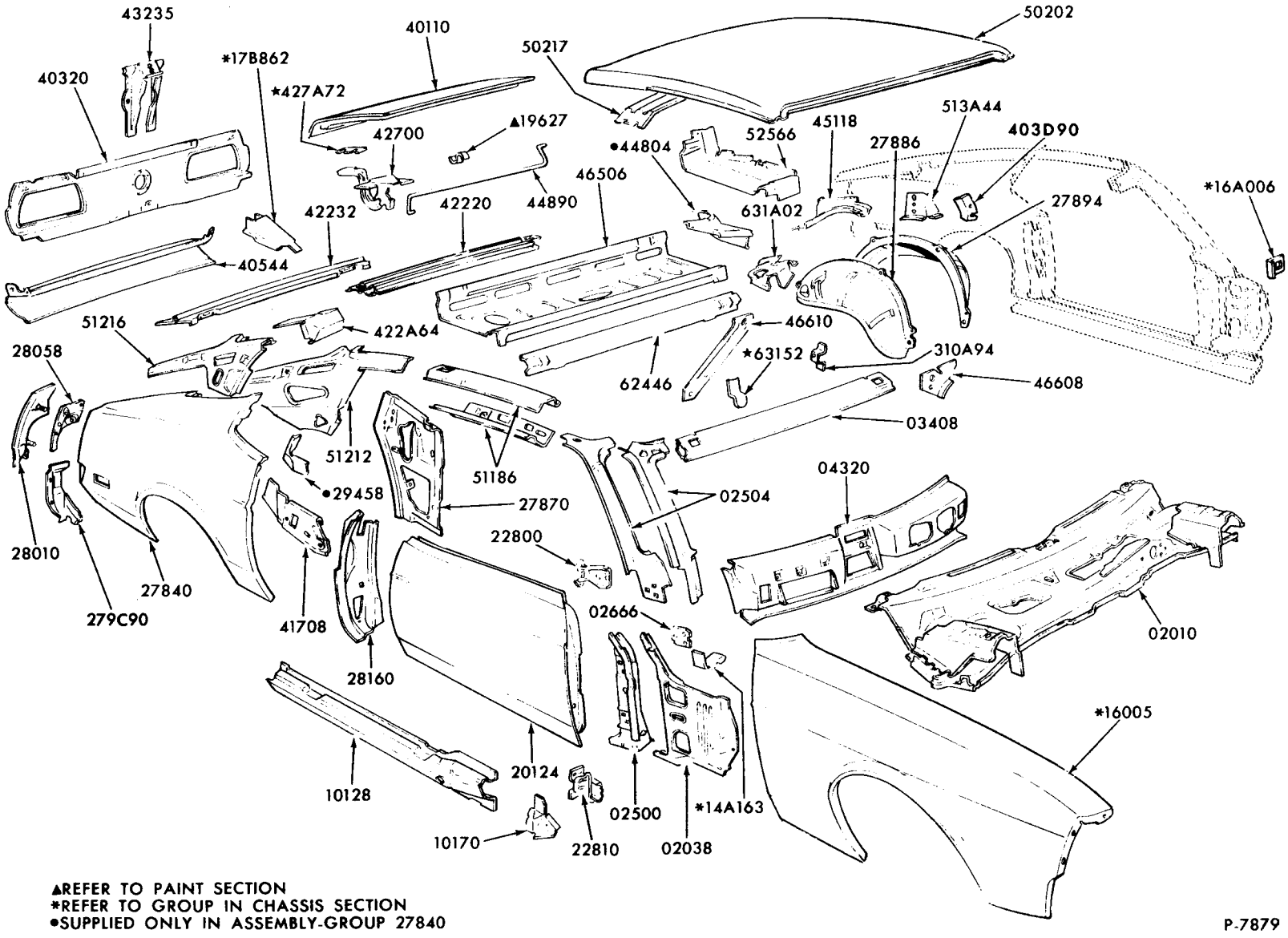


▲REFER TO PAINT SECTION
*REFER TO GROUP IN CHASSIS SECTION
•SUPPLIED ONLY IN ASSEMBLY-GROUP 27840

P-7879

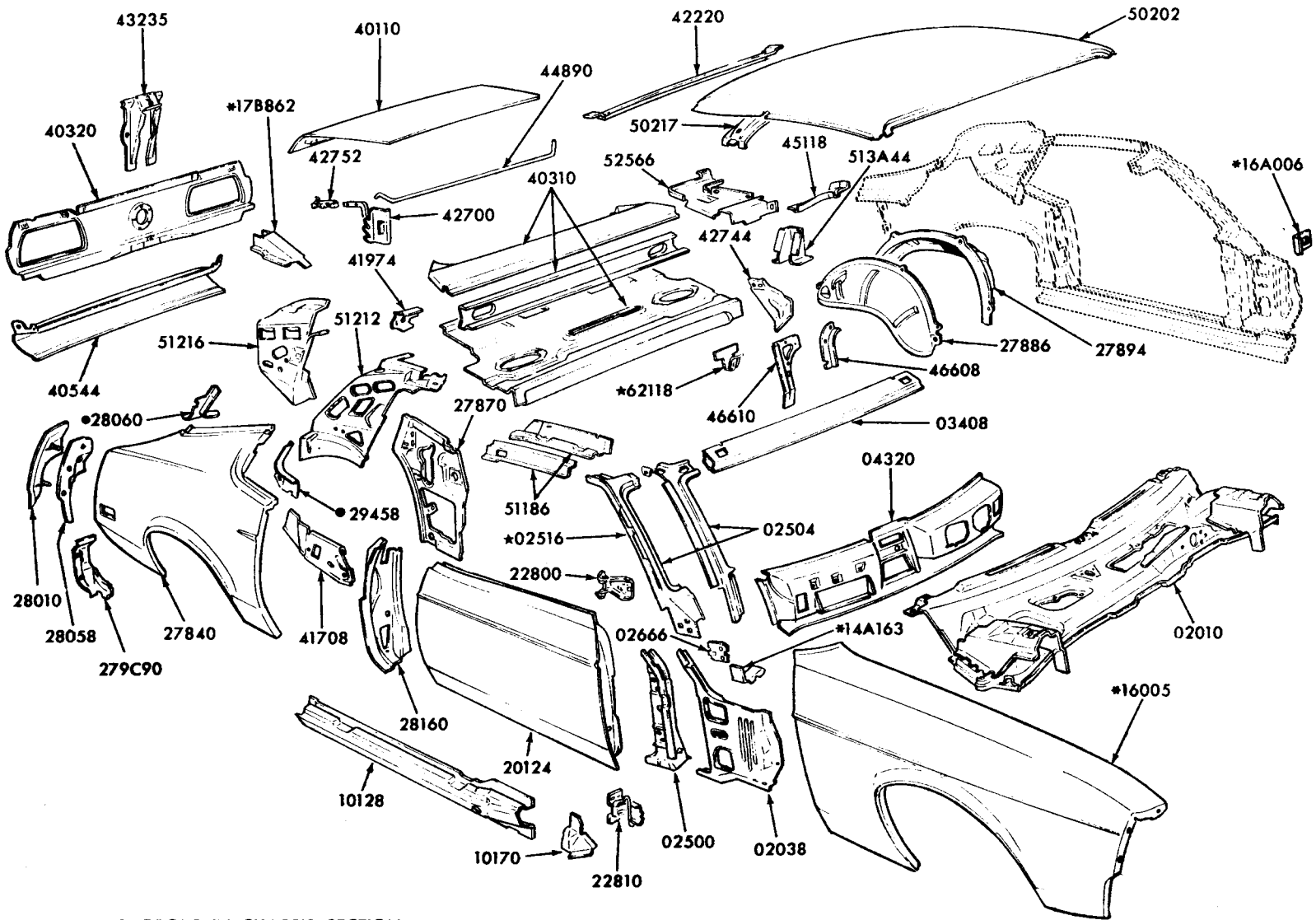


*REFER TO GROUP IN CHASSIS SECTION
•SUPPLIED ONLY IN ASSEMBLY-GROUP 27840-1

P-7880


COPYRIGHT © 1975 — FORD MOTOR COMPANY — DEARBORN, MICHIGAN

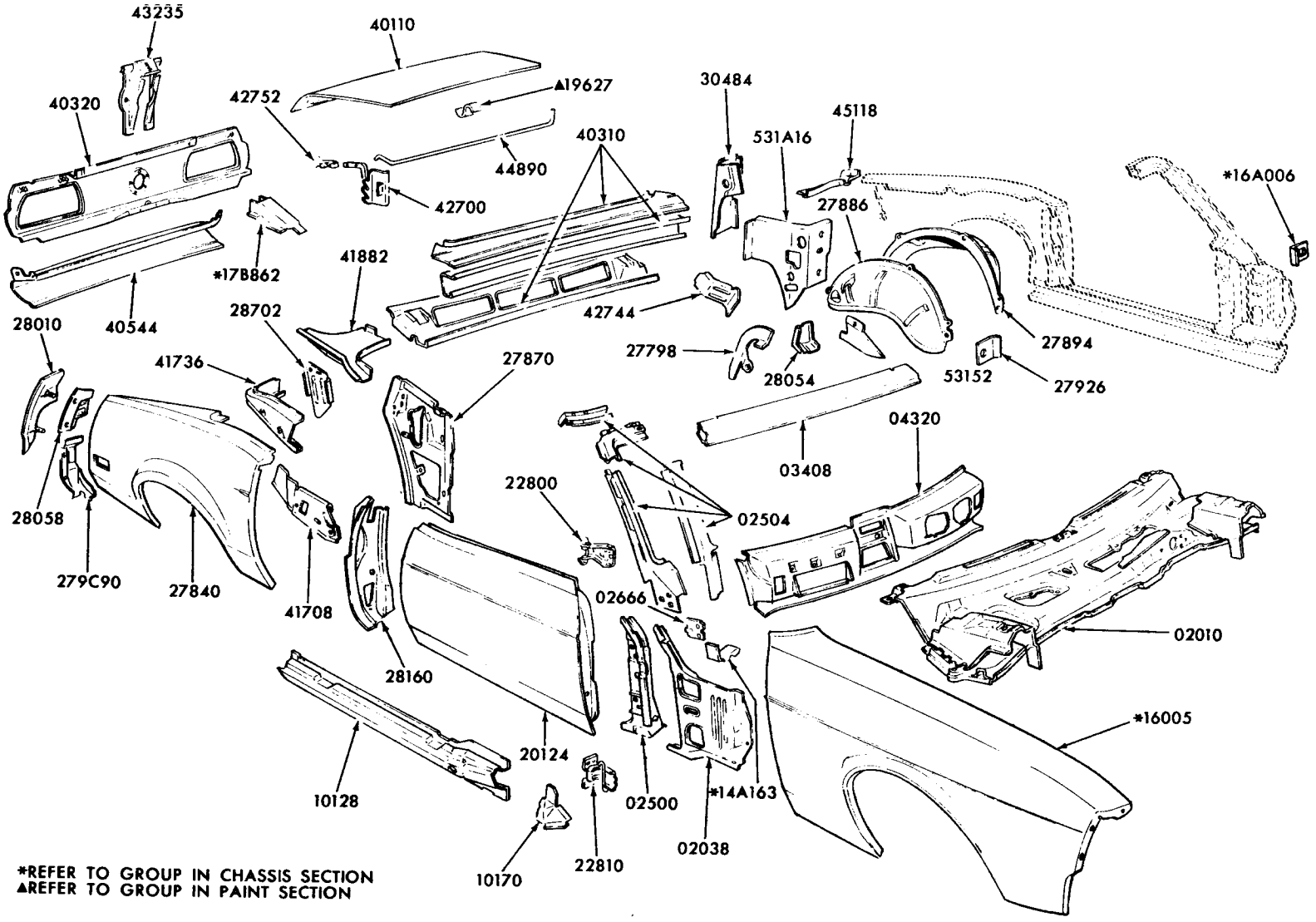
43235
40110
40320
42752
▲19627
30484
45118
531A16
40310
44890
42700
*16A006
27886
*17B862
41882
42744
28010
40544
28702
27894
27798
41736
27870
28054
53152
27926
04320
03408
22800
28058
02504
279C90
27840
41708
02666
02010
28160
*16005
20124
10128
02500
*14A163
02038
10170
22810
*REFER TO GROUP IN CHASSIS SECTION
▲REFER TO GROUP IN PAINT SECTION
P-7882

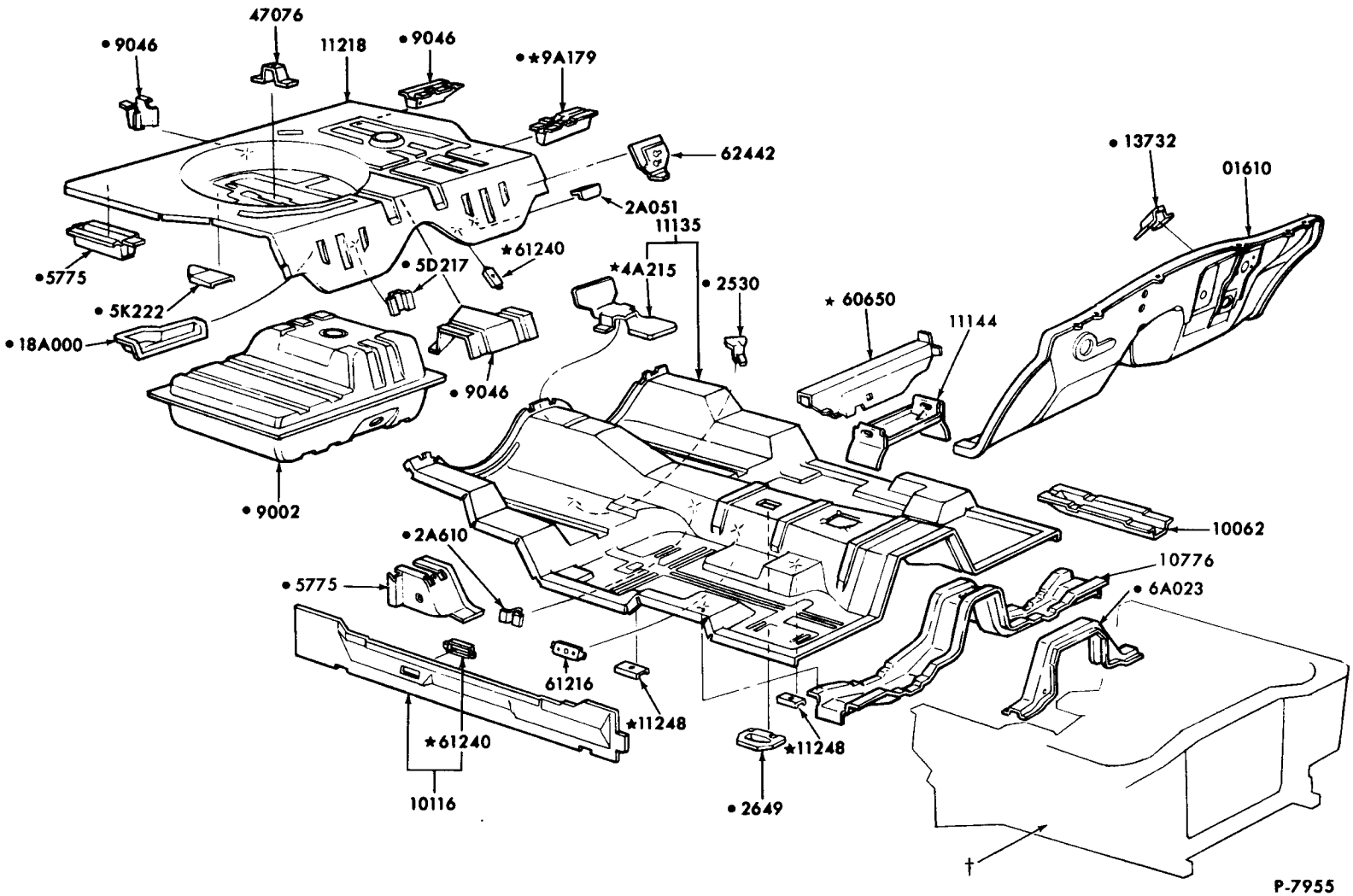


• REFER TO CHASSIS SECTION
† REFER TO ILLUST. SECTION 160 FOR DETAILS


COPYRIGHT © 1975 — FORD MOTOR COMPANY — DEARBORN, MICHIGAN

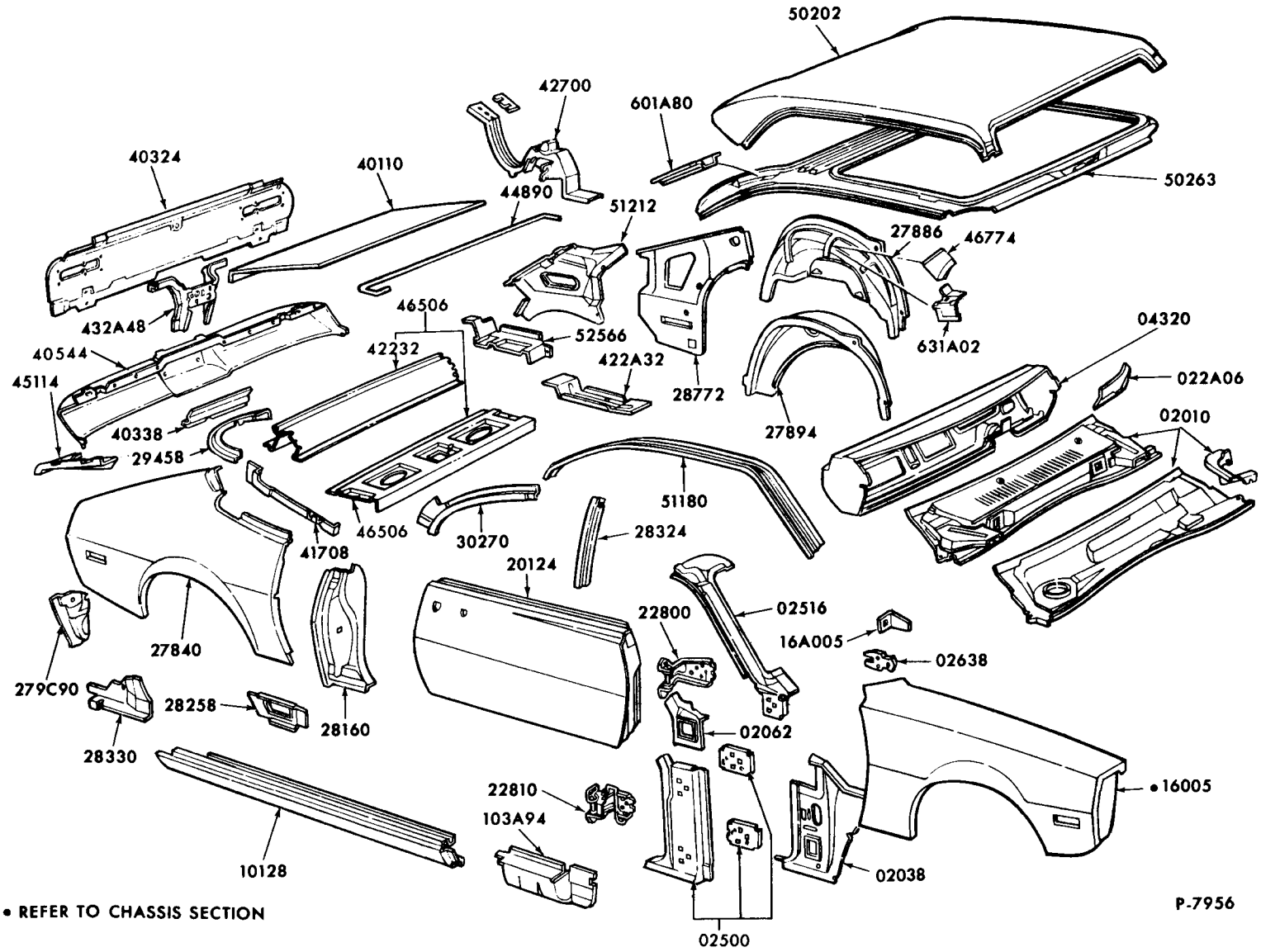


• REFER TO CHASSIS SECTION

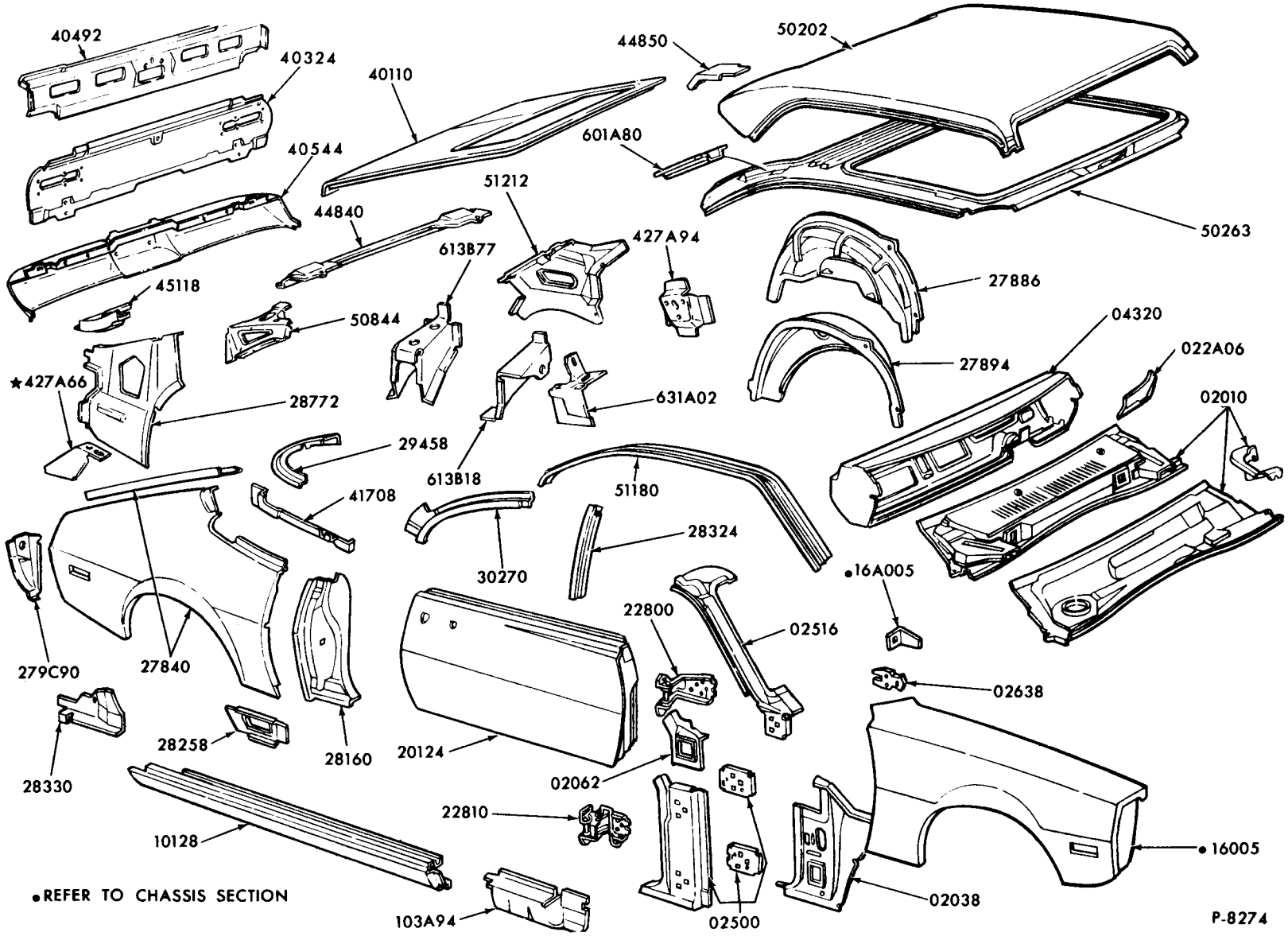



COPYRIGHT © 1975 — FORD MOTOR COMPANY — DEARBORN, MICHIGAN

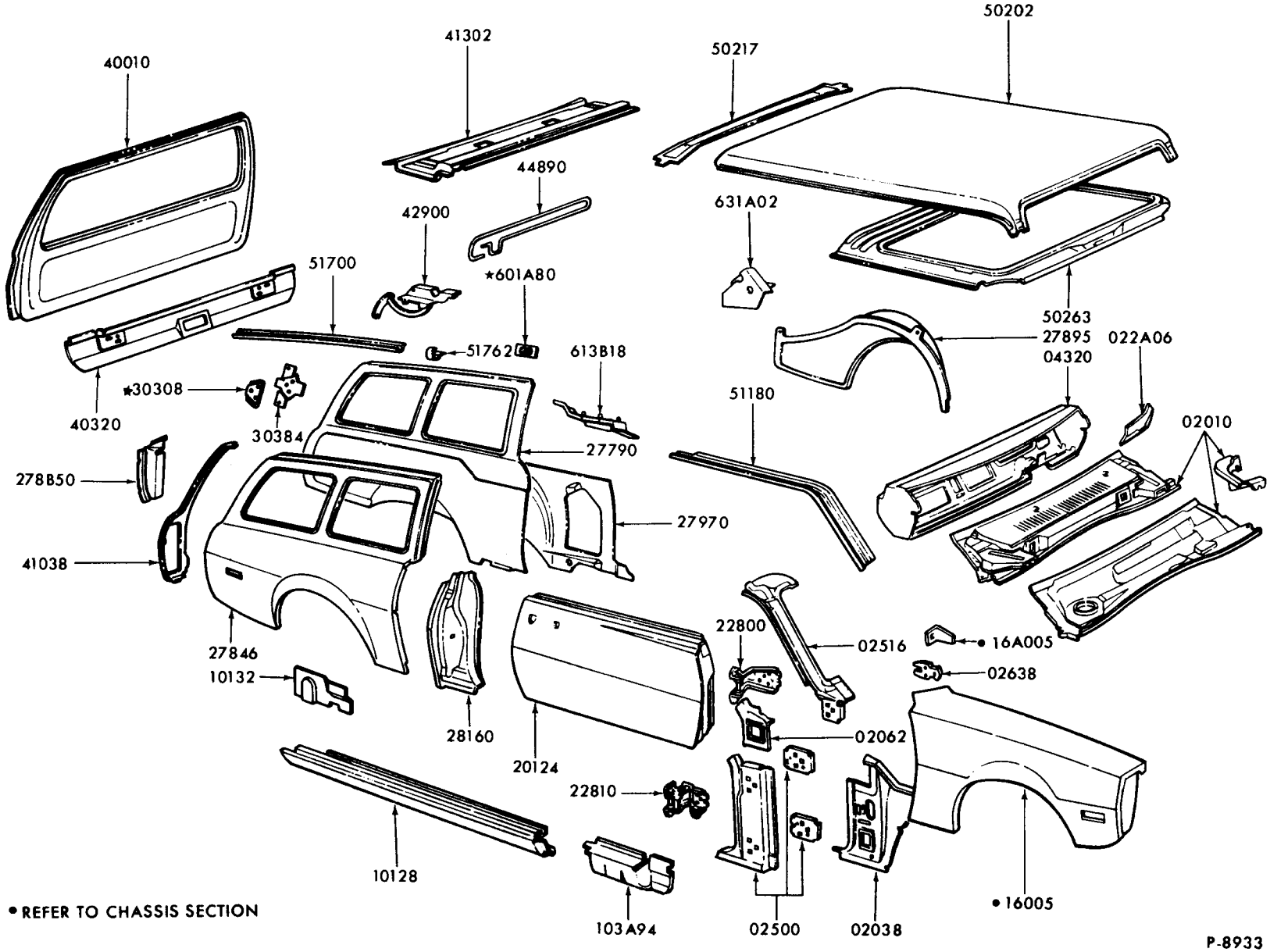
40010
41302
50217
50202
44890
42900
631A02
51700
*601A80
50263
27895
04320
022A06
51762
613B18
*30308
40320
30384
51180
02010
27790
278B50
27970
41038
22800
02516
• 16A005
02638
27846
10132
28160
20124
02062
22810
10128
103A94
02500
02038
• 16005
• REFER TO CHASSIS SECTION
P-8933

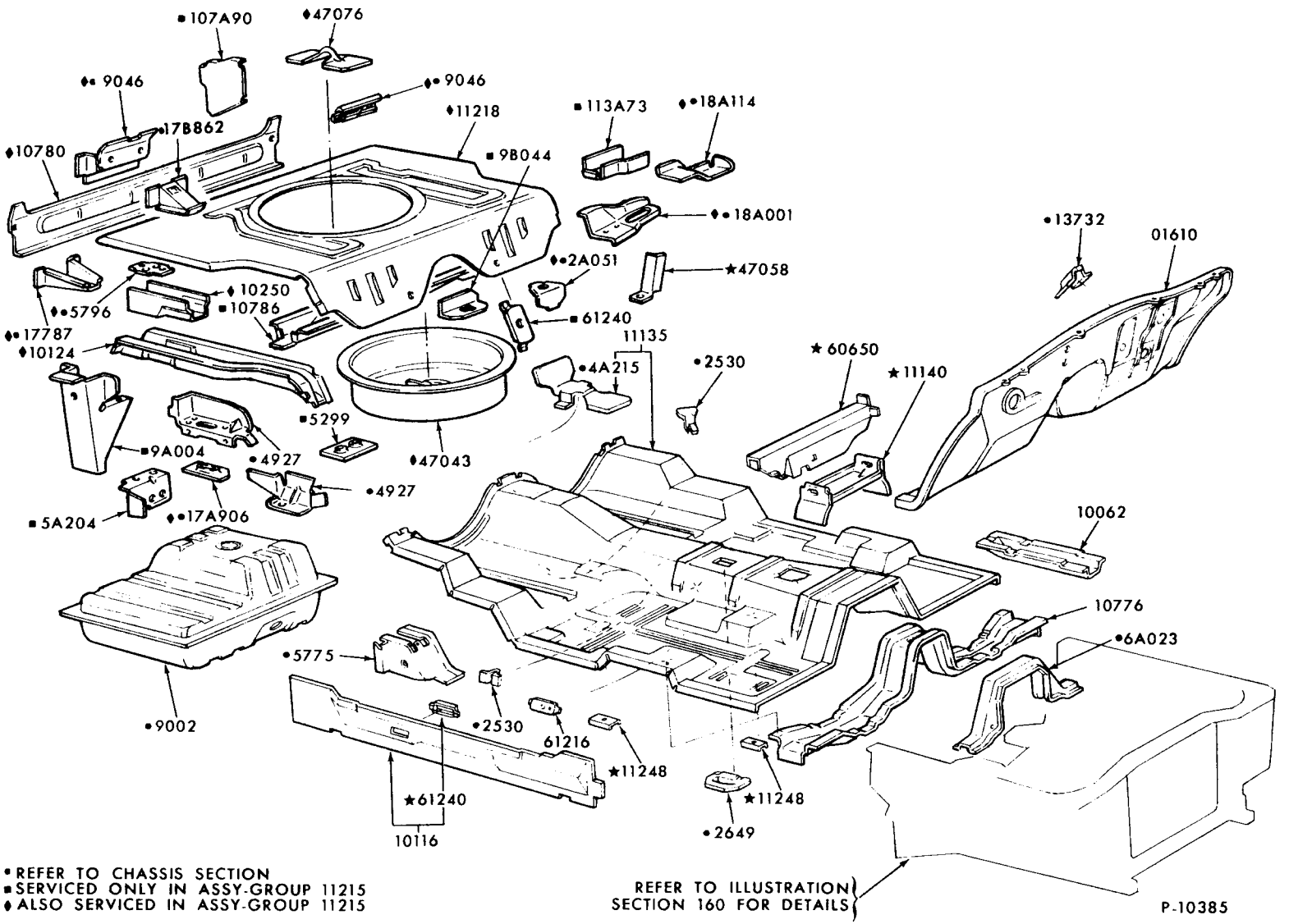


• REFER TO CHASSIS SECTION
■ SERVICED ONLY IN ASSY-GROUP 11215
♦ ALSO SERVICED IN ASSY-GROUP 11215

REFER TO ILLUSTRATION SECTION 160 FOR DETAILS


COPYRIGHT © 1975 — FORD MOTOR COMPANY — DEARBORN, MICHIGAN

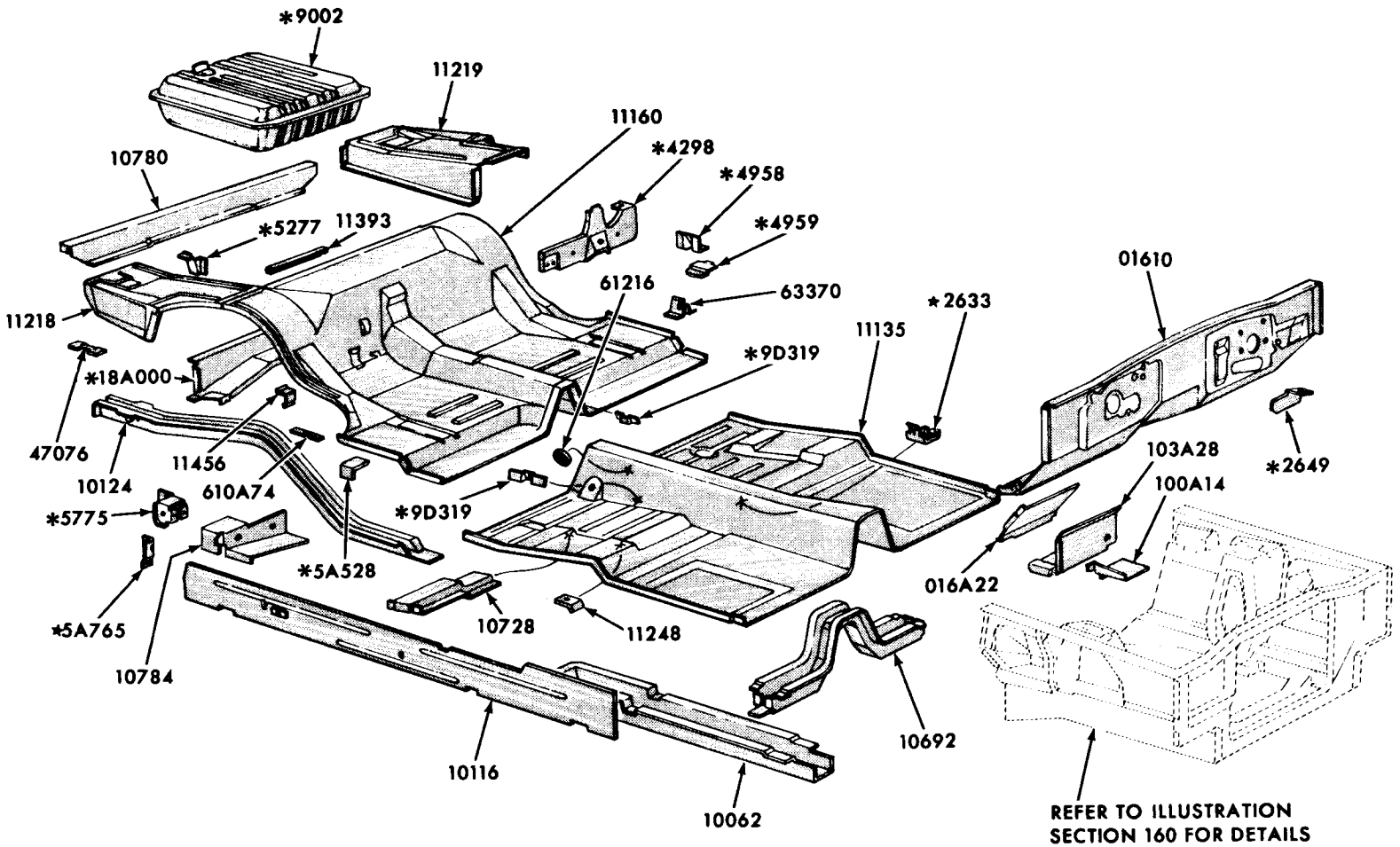


* REFER TO GROUP IN CHASSIS SECTION

P-6874


COPYRIGHT © 1975 — FORD MOTOR COMPANY — DEARBORN, MICHIGAN

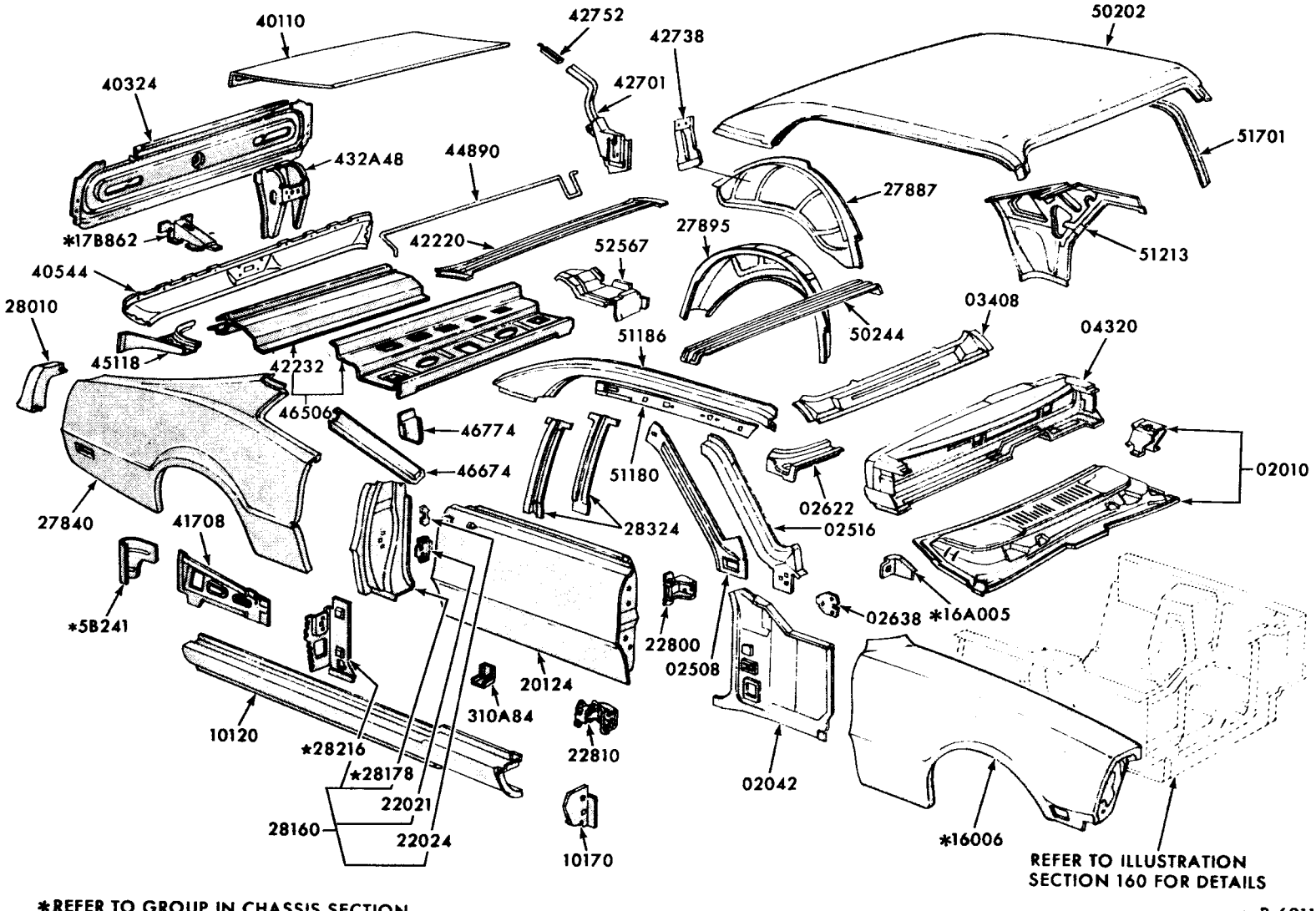


*REFER TO GROUP IN CHASSIS SECTION

P-6911

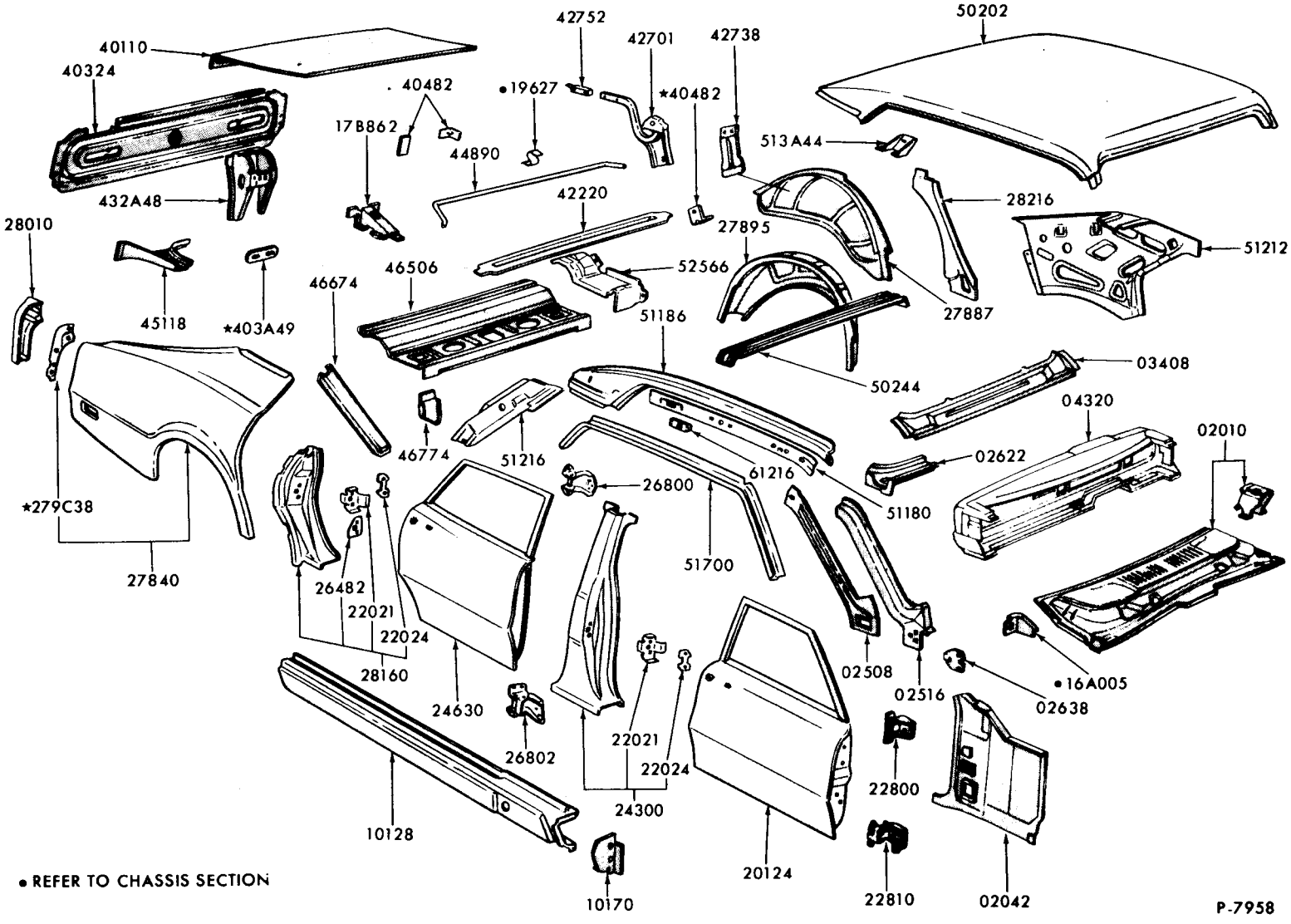


• REFER TO CHASSIS SECTION


COPYRIGHT © 1975 — FORD MOTOR COMPANY — DEARBORN, MICHIGAN

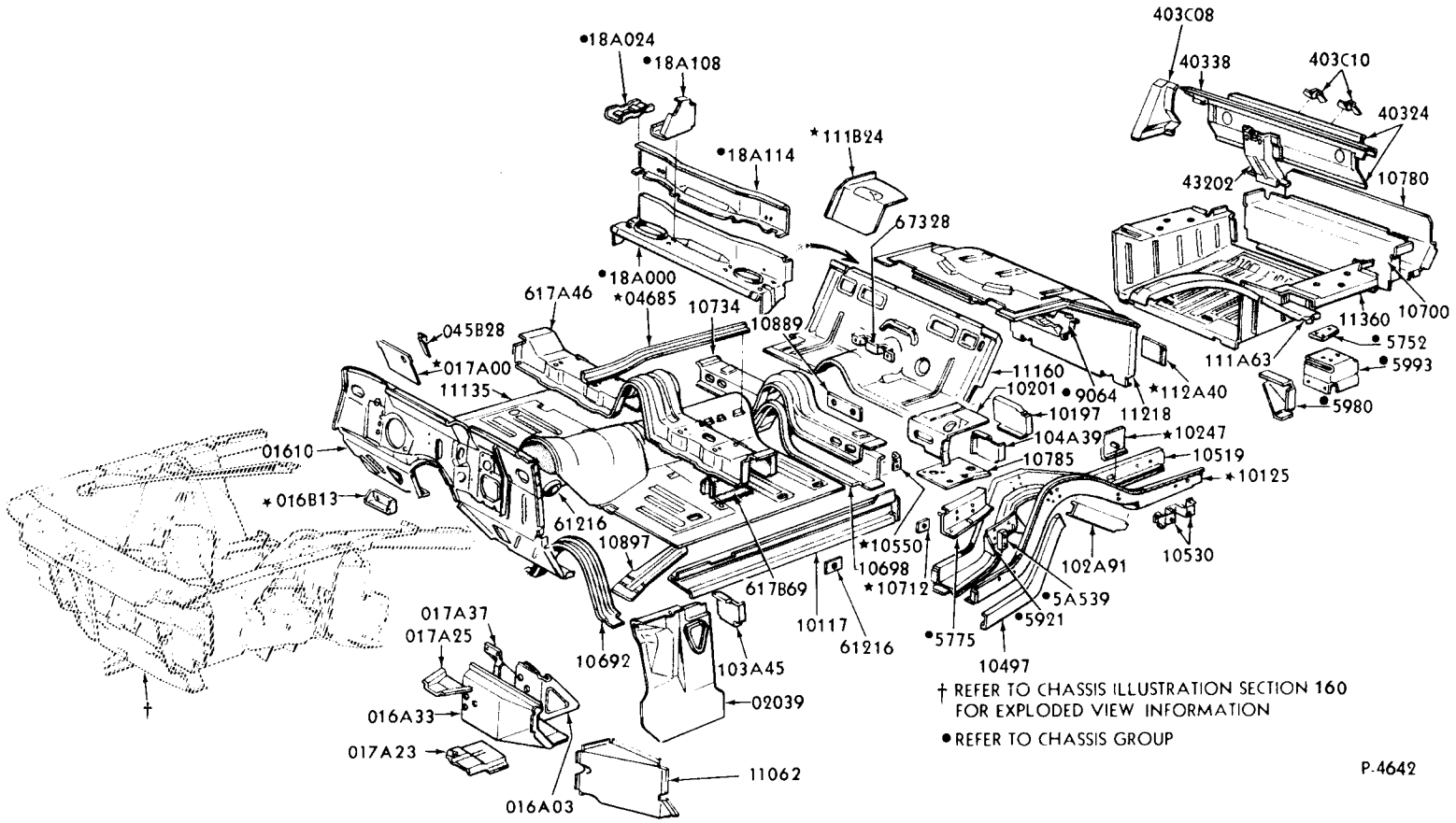



COPYRIGHT © 1975 — FORD MOTOR COMPANY — DEARBORN, MICHIGAN

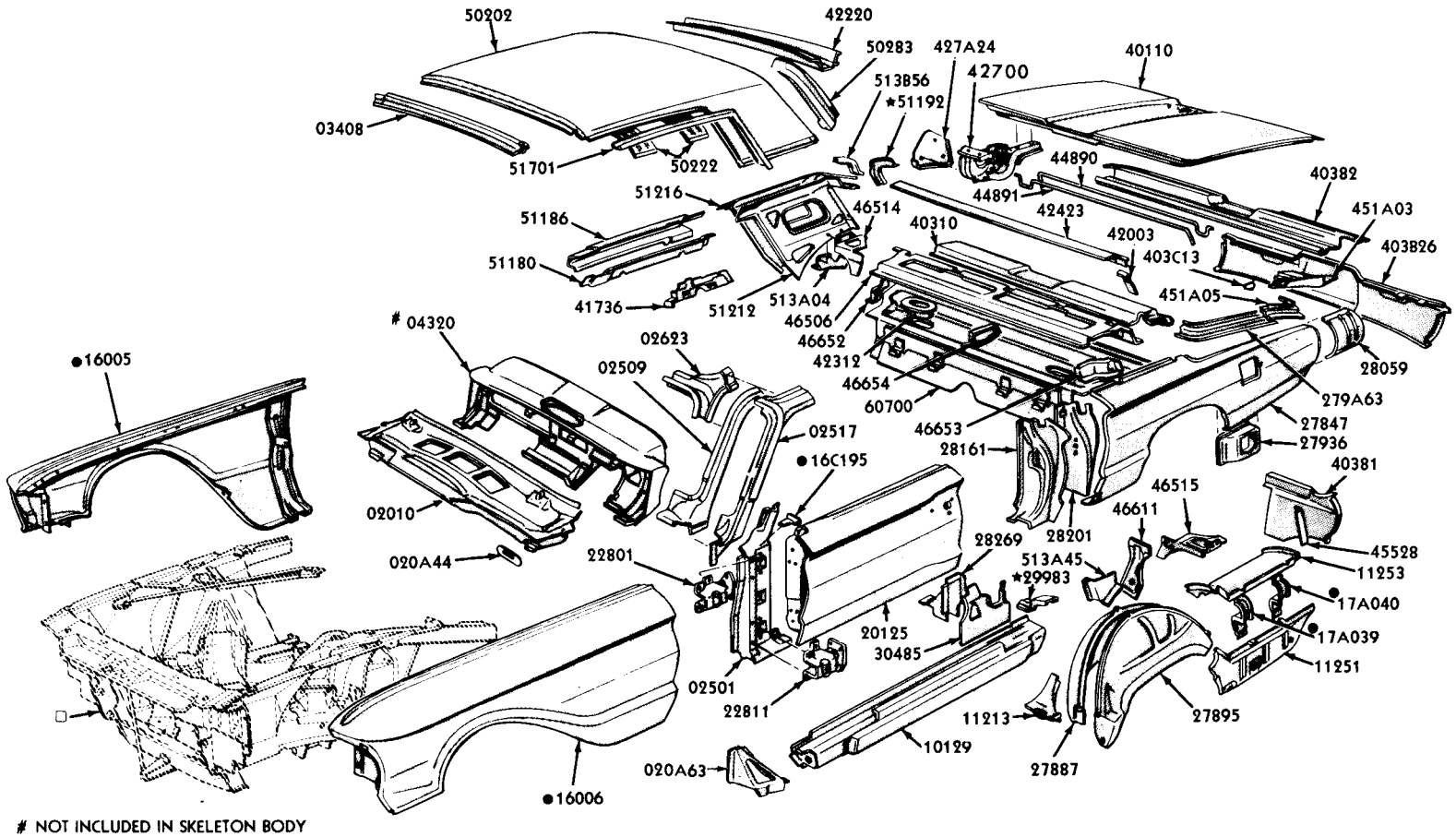


# NOT INCLUDED IN SKELETON BODY
● REFER TO CHASSIS GROUP NUMBER
□ REFER TO CHASSIS ILLUSTRATION SECTION 160

P-4641

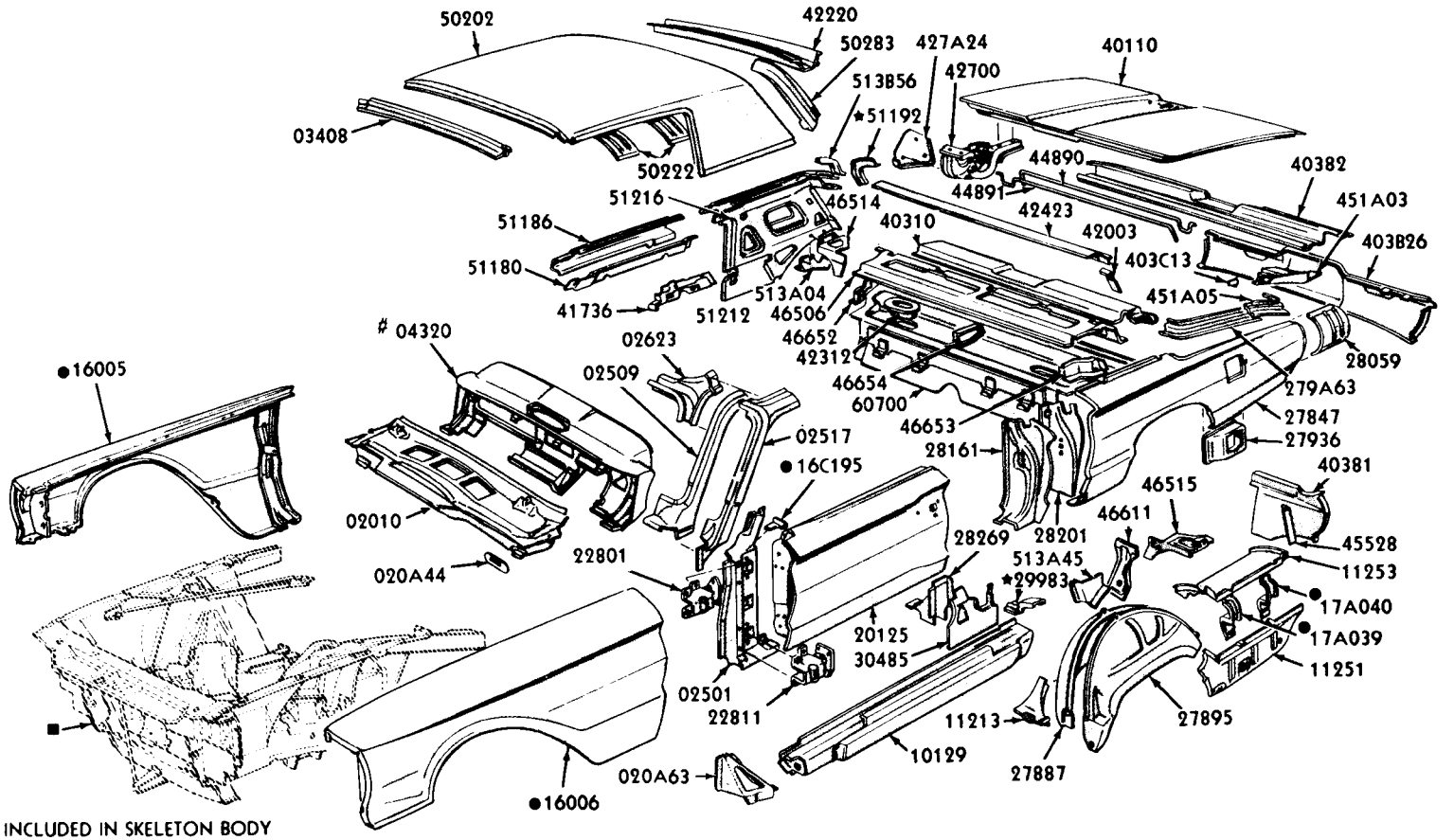


# NOT INCLUDED IN SKELETON BODY
● REFER TO CHASSIS GROUP NUMBER
■ REFER TO CHASSIS ILLUSTRATION SECTION 160

P-5017


COPYRIGHT © 1975 — FORD MOTOR COMPANY — DEARBORN, MICHIGAN

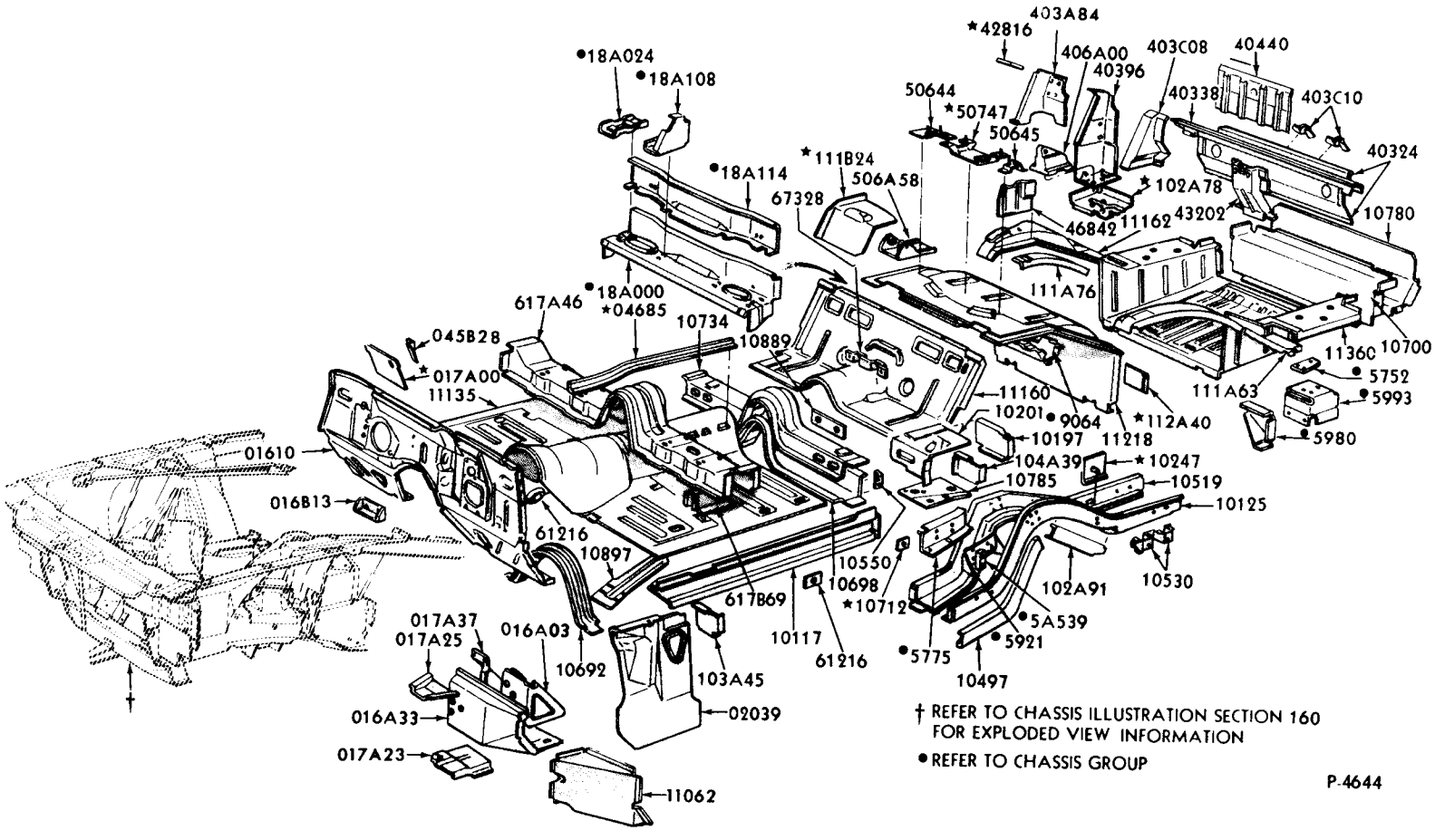
403A84
*42816
406A00
403C08
40440
40396
•18A024
•18A108
50644
*50747
50645
40338
403C10
40324
*111B24
•18A114
506A58
67328
*102A78
43202
10780
46842
11162
111A76
•18A000
617A46
*04685
10734
045B28
10889
11360
10700
*017A00
11135
5752
111A63
5993
11160
10201
•9064
*112A40
10197
11218
5980
01610
104A39
*10247
10785
10519
016B13
10125
61216
10897
10550
10698
102A91
10530
617B69
*10712
017A37
017A25
016A03
10117
•5A539
•5921
10692
61216
•5775
103A45
10497
016A33
02039
017A23
11062
† REFER TO CHASSIS ILLUSTRATION SECTION 160 FOR EXPLODED VIEW INFORMATION
• REFER TO CHASSIS GROUP
P-4644

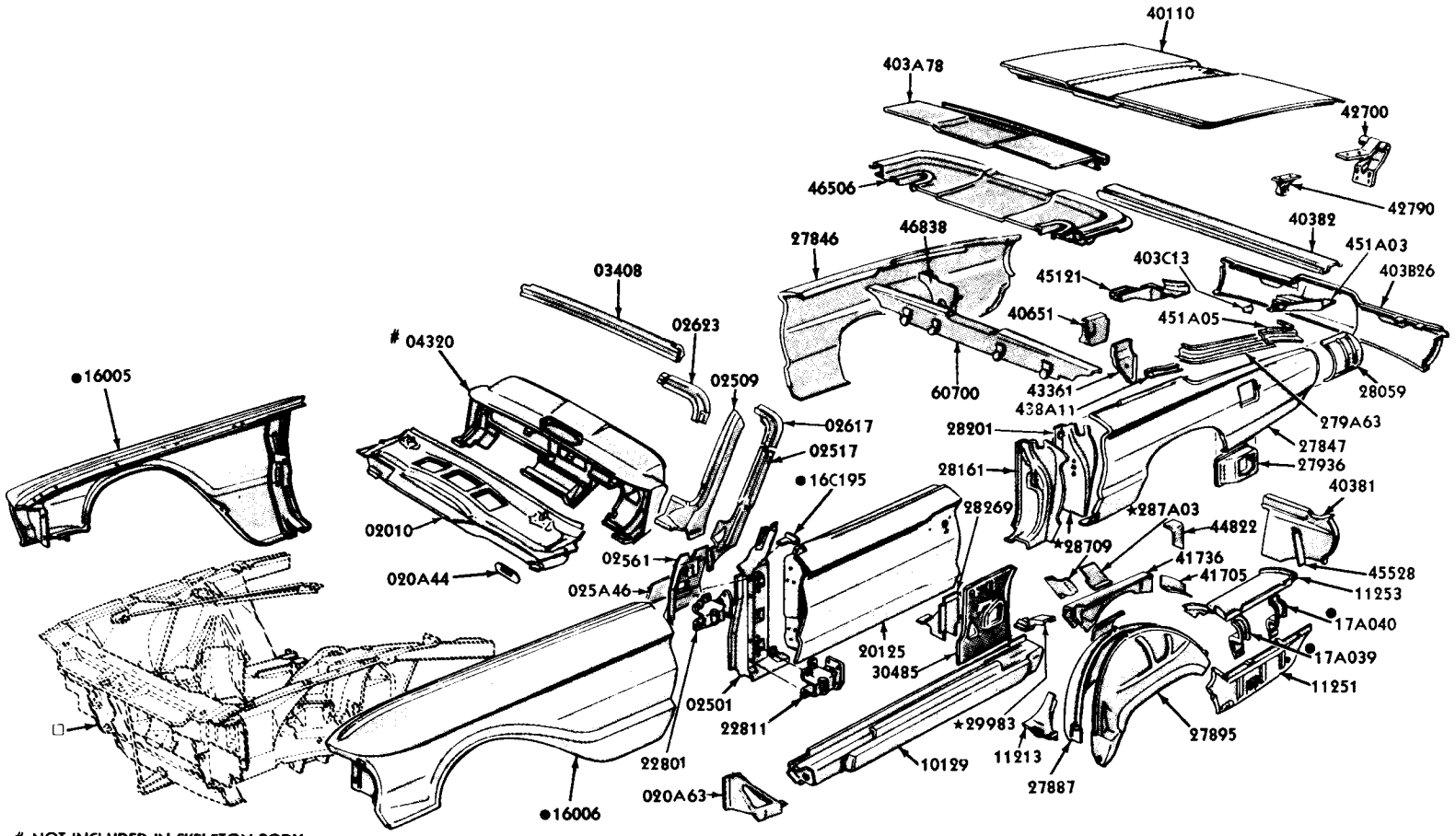


# NOT INCLUDED IN SKELETON BODY
● REFER TO CHASSIS GROUP NUMBER
□ REFER TO CHASSIS ILLUSTRATION SECTION 160

P-4643


COPYRIGHT © 1975 — FORD MOTOR COMPANY — DEARBORN, MICHIGAN

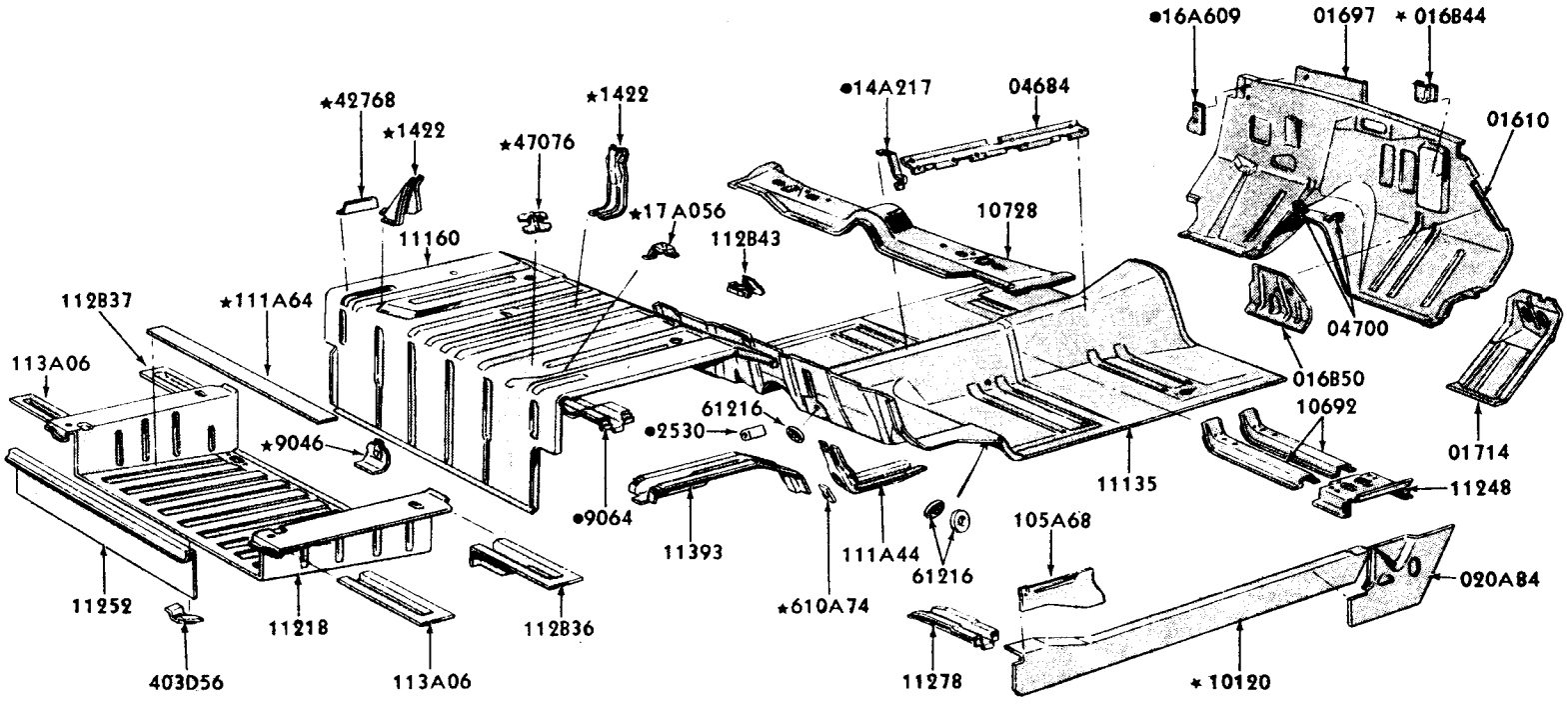


•REFER TO GROUP IN CHASSIS SECTION

P-5354

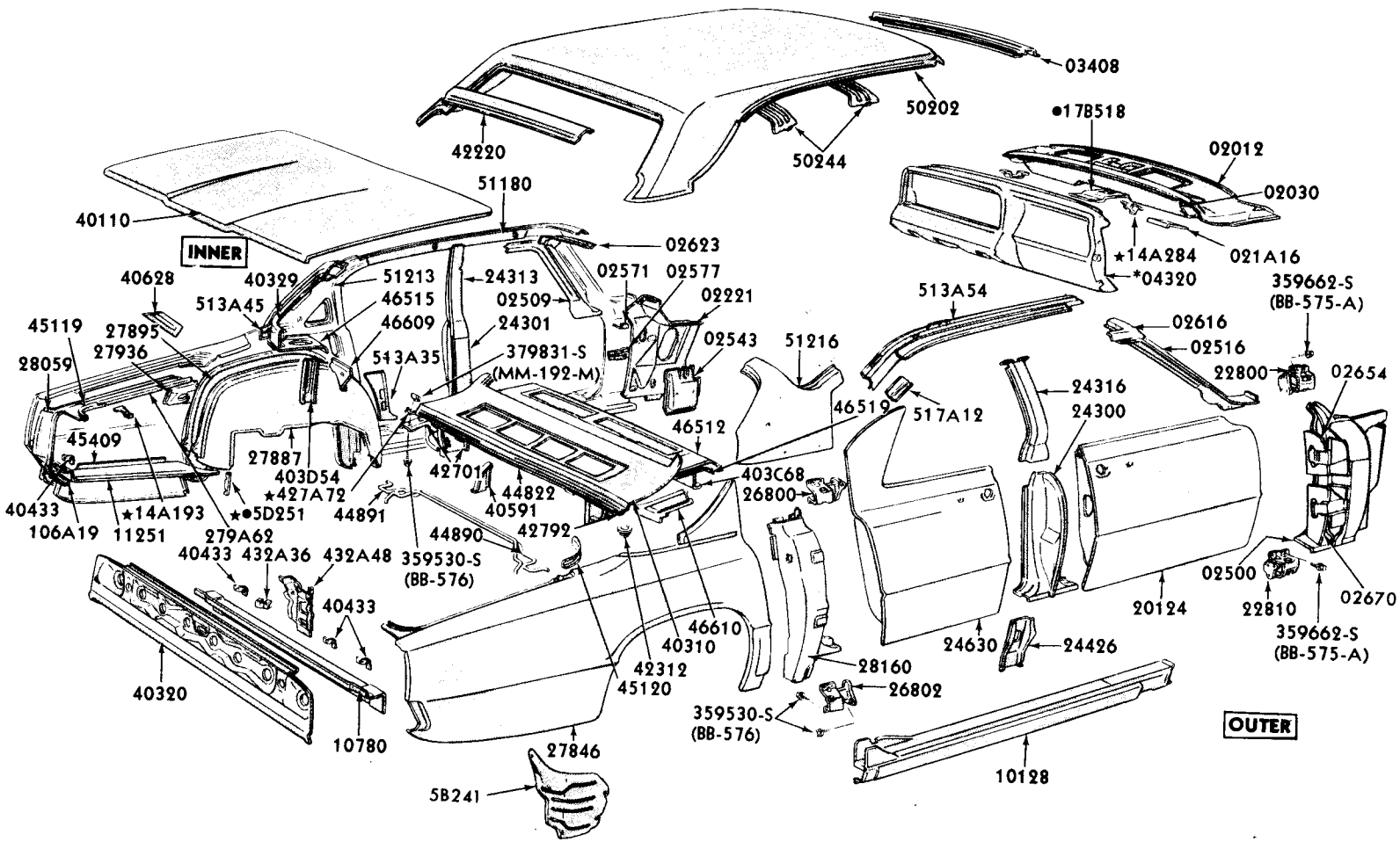


• REFER TO GROUP IN CHASSIS SECTION
* NOT INCLUDED WITH SKELETON BODY

P-5356


COPYRIGHT © 1975 — FORD MOTOR COMPANY — DEARBORN, MICHIGAN

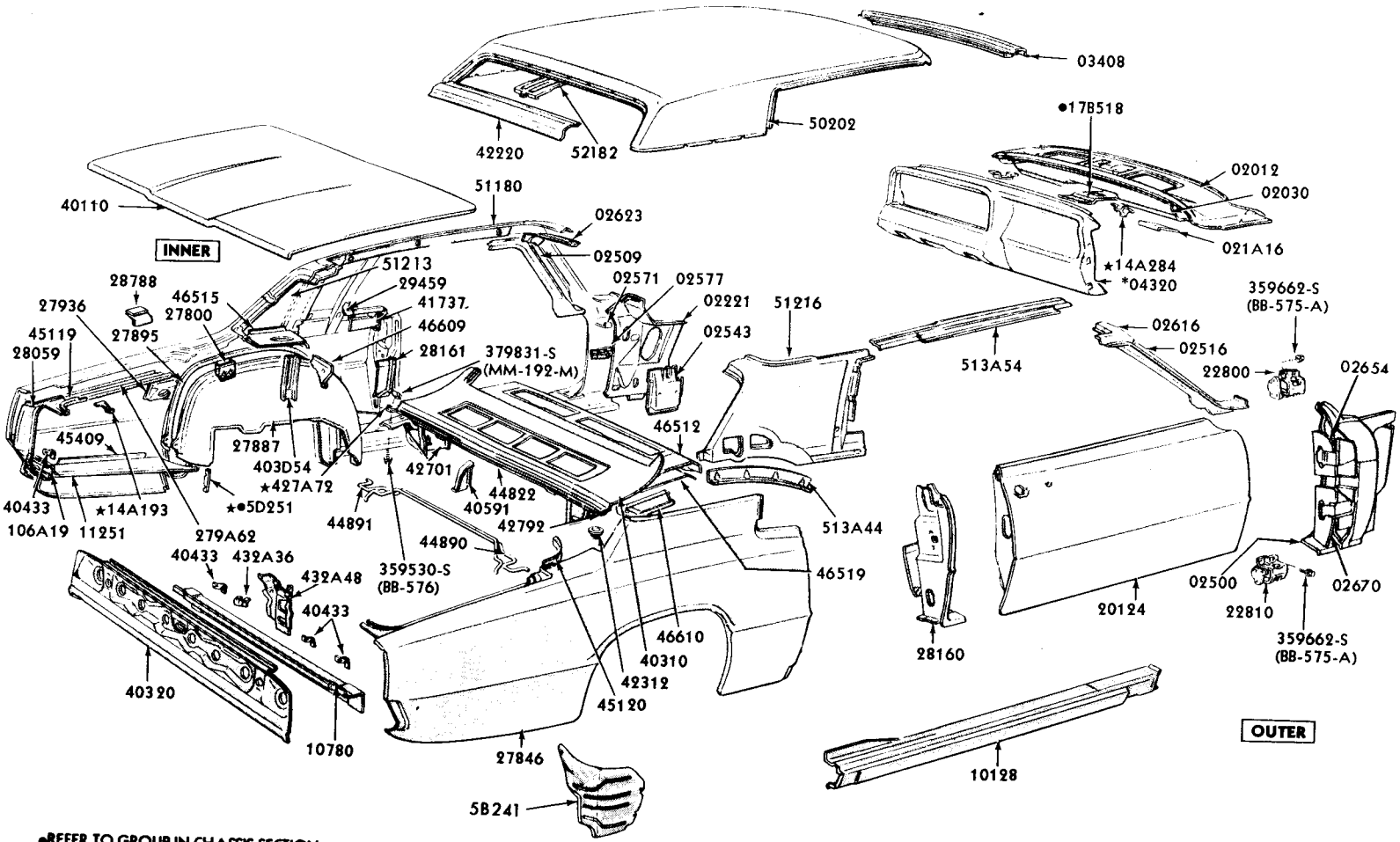


•REFER TO GROUP IN CHASSIS SECTION
*NOT INCLUDED WITH SKELETON BODY

P-5357

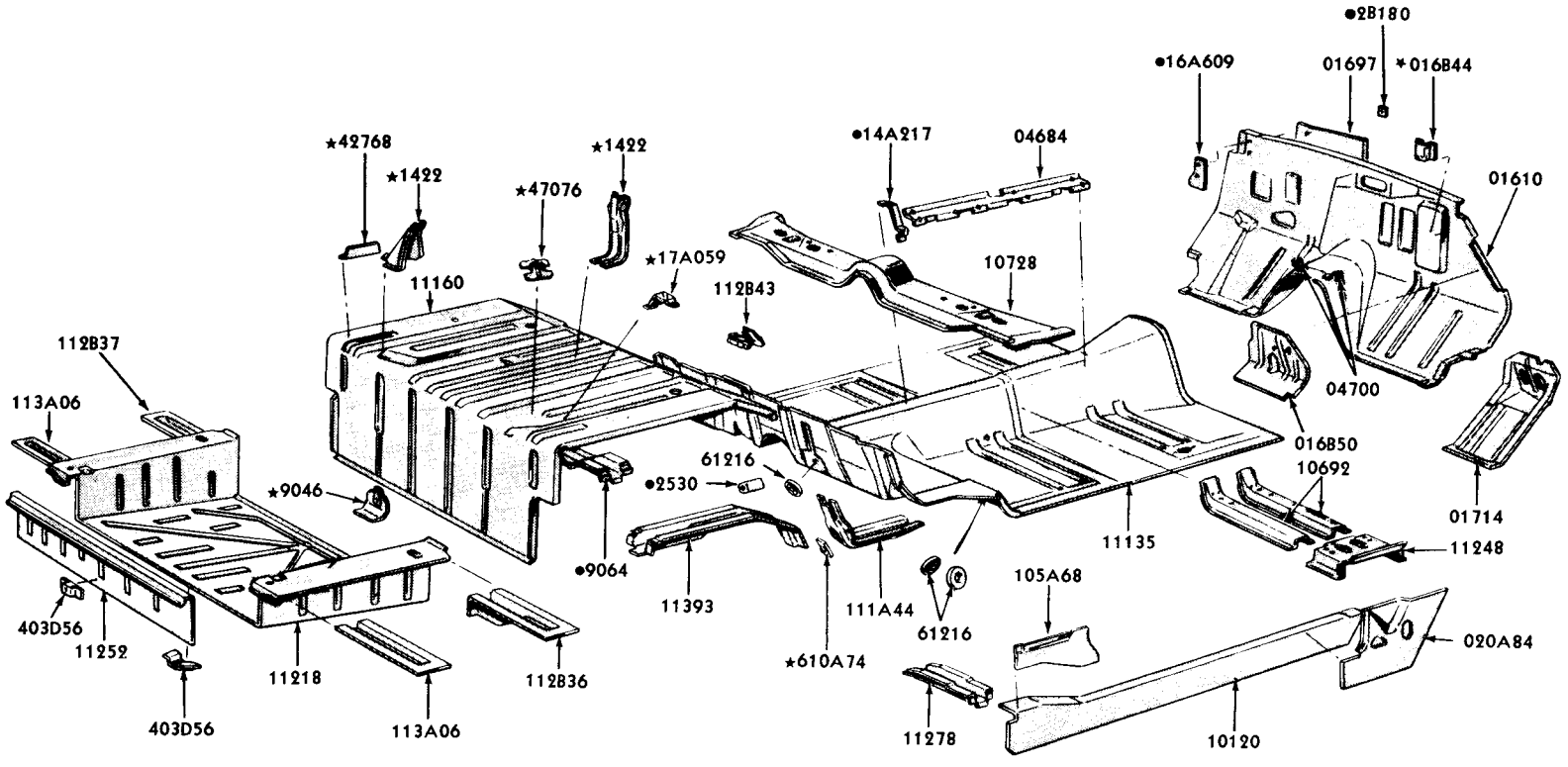


●REFER TO GROUP IN CHASSIS SECTION


COPYRIGHT © 1975 — FORD MOTOR COMPANY — DEARBORN, MICHIGAN

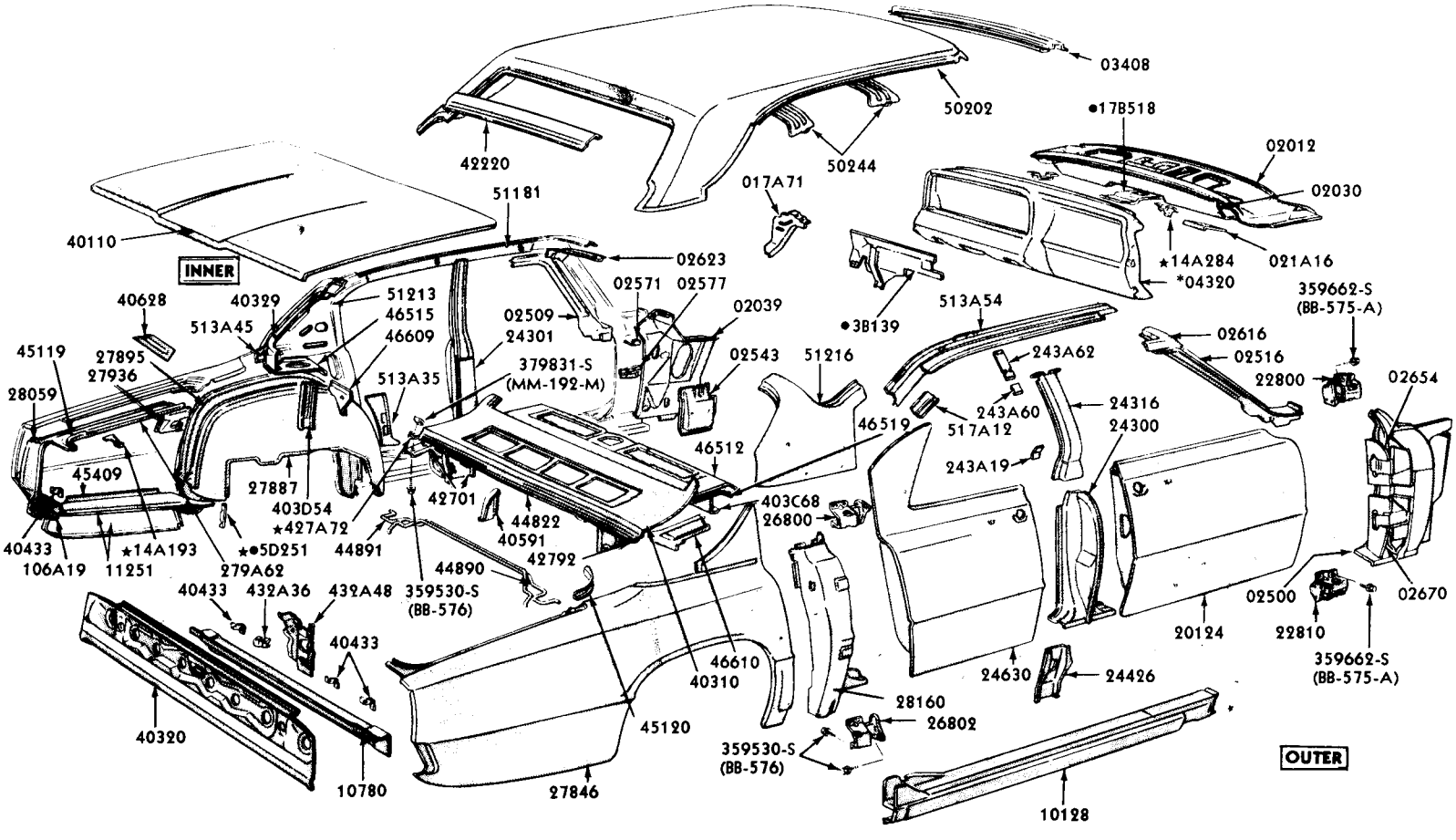


●REFER TO GROUP IN CHASSIS SECTION
*NOT INCLUDED WITH SKELETON BODY

P-6068

COPYRIGHT © 1975 — FORD MOTOR COMPANY — DEARBORN, MICHIGAN



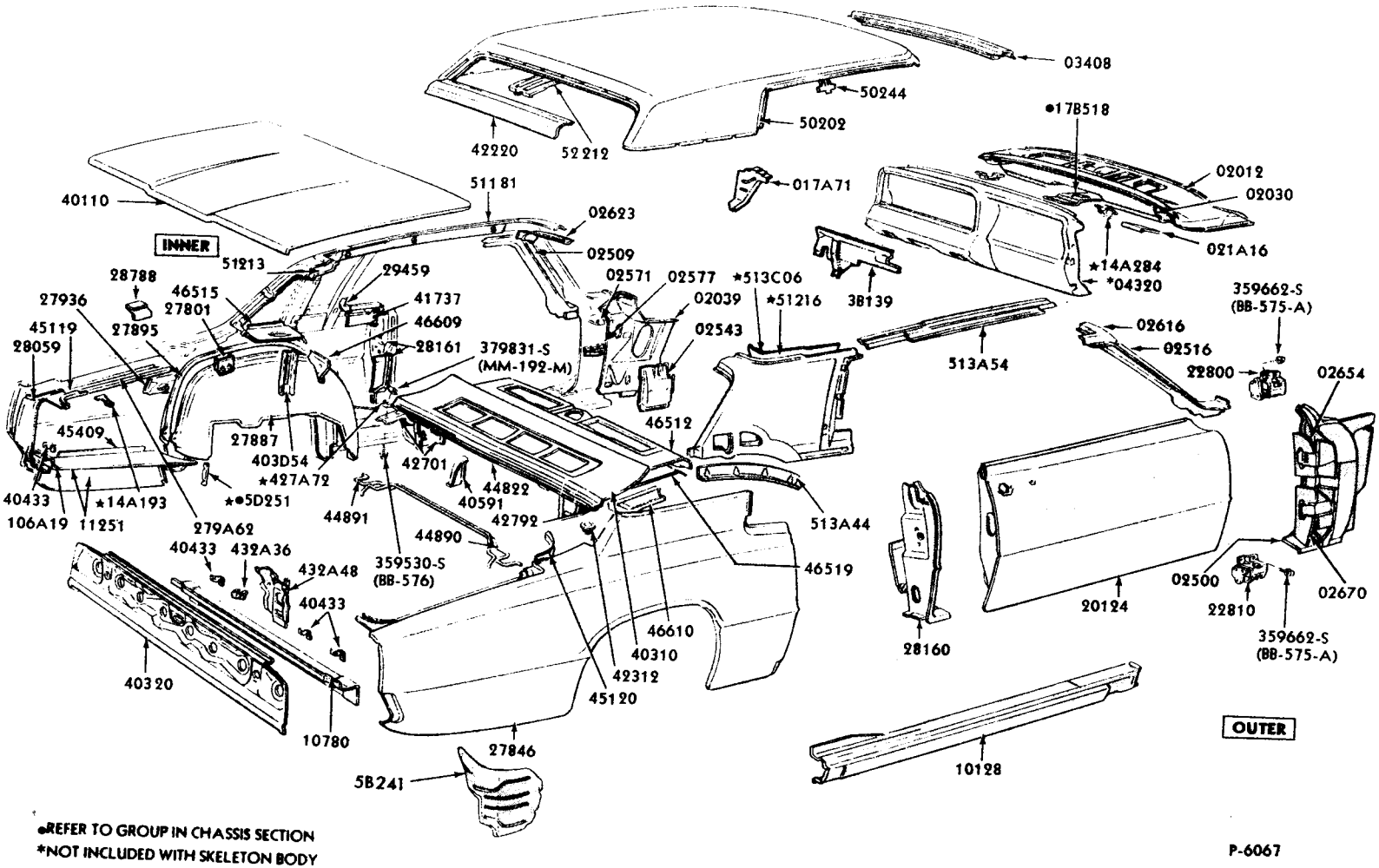

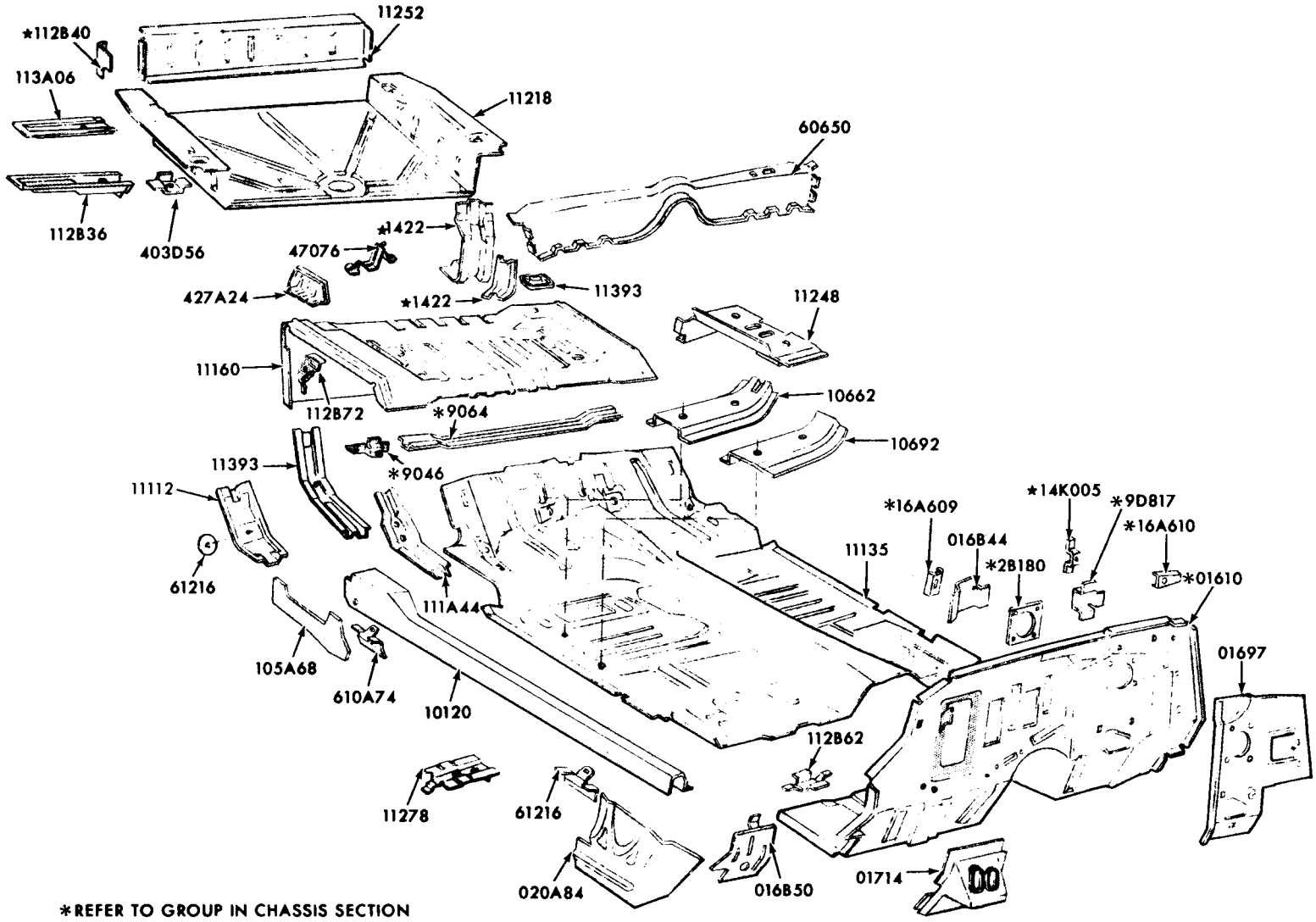
*112B40
113A06
11252
11218
60650
112B36
403D56
*1422
47076
427A24
*1422
11393
11248
11160
112B72
*9064
10662
10692
11393
*9046
11112
61216
111A44
105A68
610A74
10120
11135
*16A609
016B44
*2B180
*14K005
*9D817
*16A610
*01610
01697
112B62
11278
61216
020A84
016B50
01714
*REFER TO GROUP IN CHASSIS SECTION
P-7034

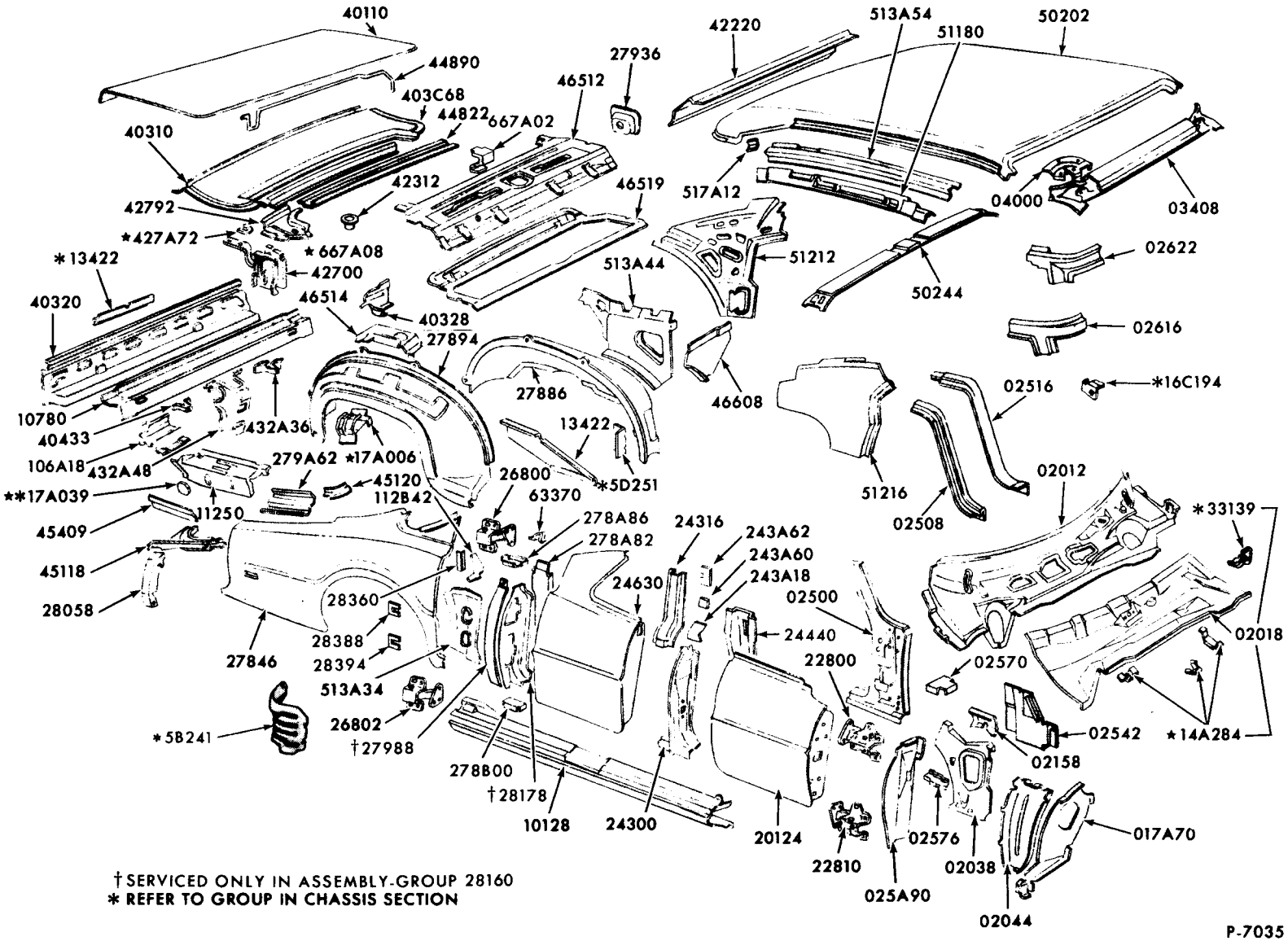


†SERVICED ONLY IN ASSEMBLY-GROUP 28160
* REFER TO GROUP IN CHASSIS SECTION


COPYRIGHT © 1975 — FORD MOTOR COMPANY — DEARBORN, MICHIGAN

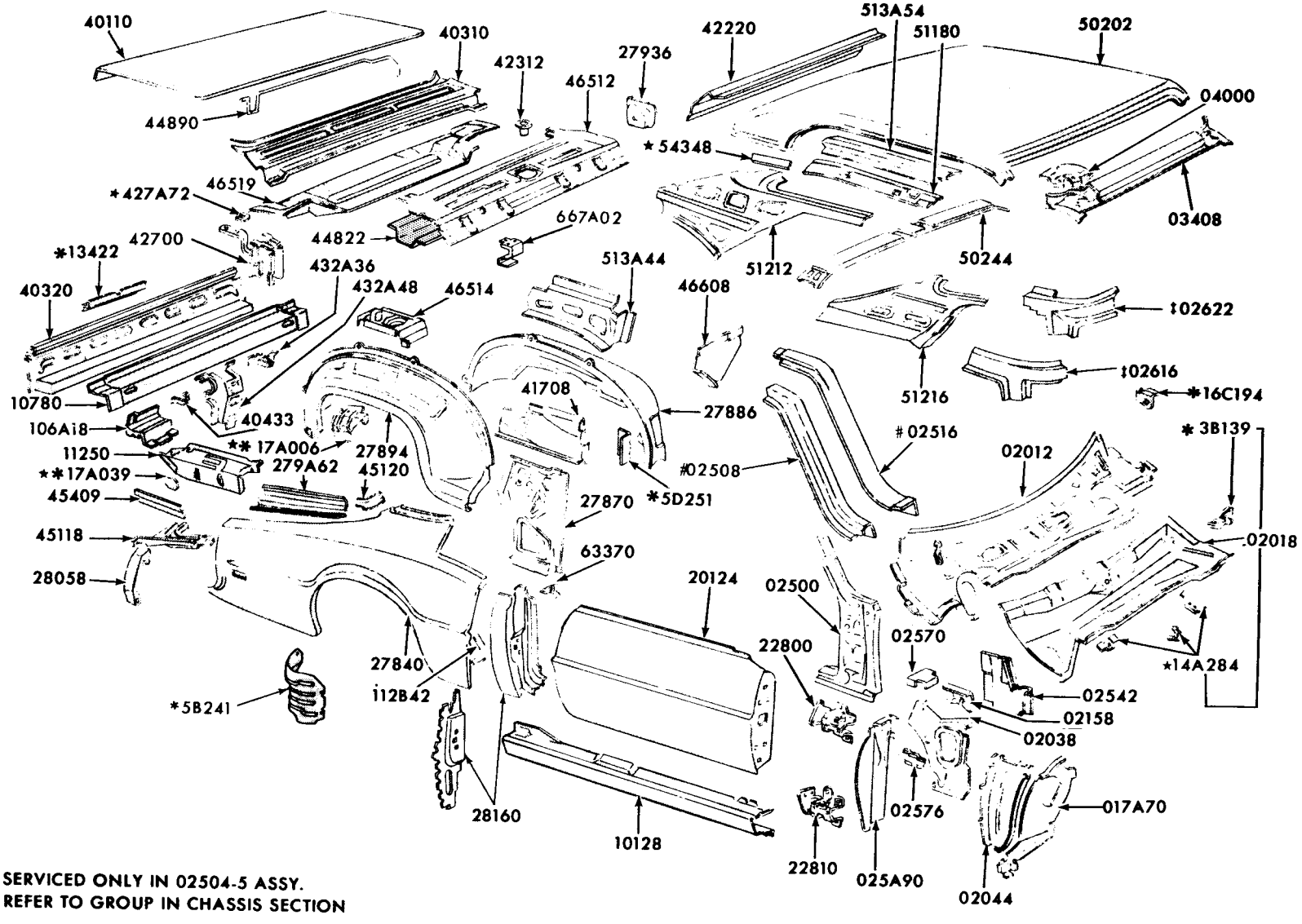


# SERVICED ONLY IN 02504-5 ASSY.
* REFER TO GROUP IN CHASSIS SECTION

P-7036

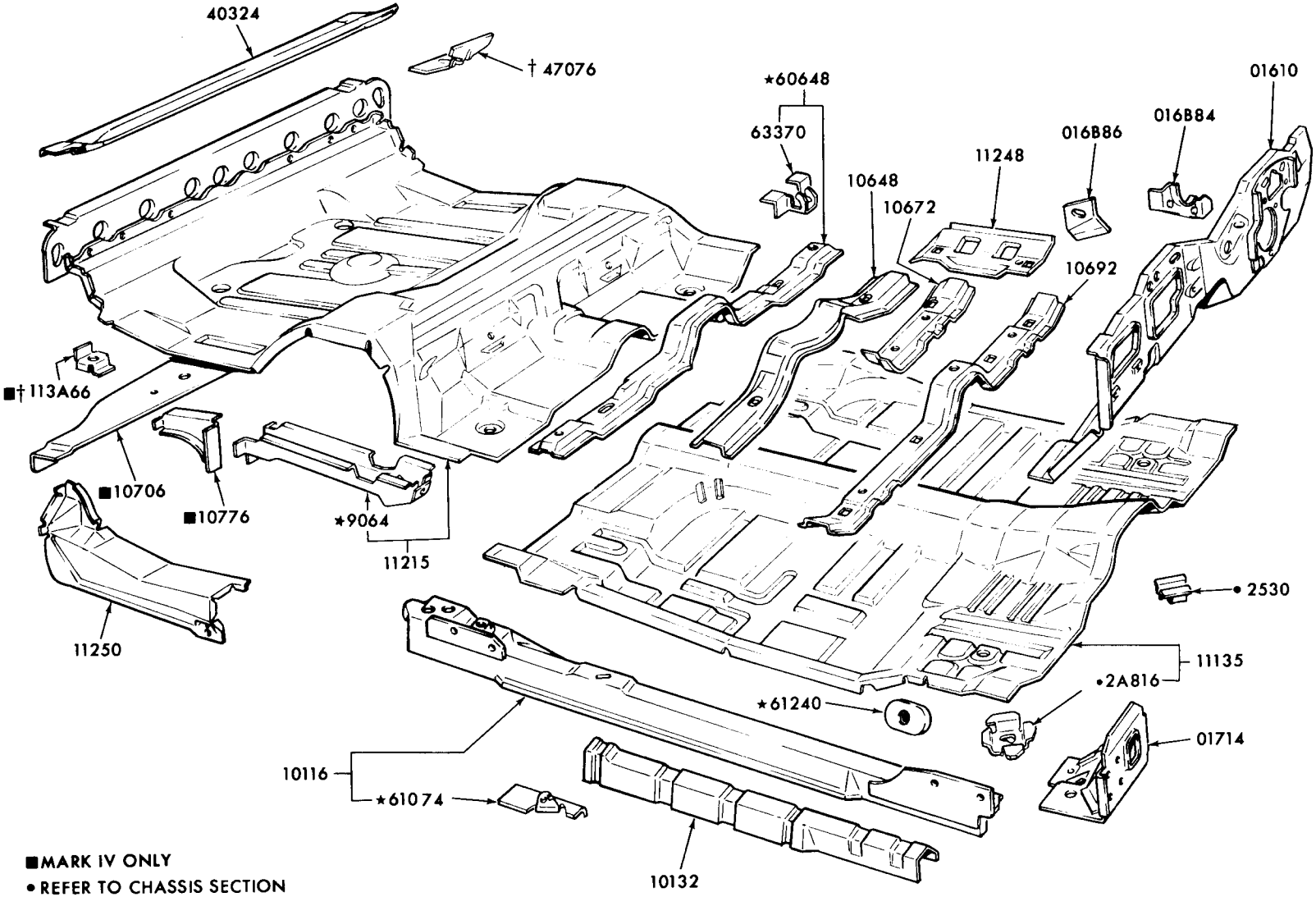


■MARK IV ONLY
• REFER TO CHASSIS SECTION
† ALSO SERVICED IN ASSY. - GROUP 11215

P-8828


COPYRIGHT © 1975 — FORD MOTOR COMPANY — DEARBORN, MICHIGAN

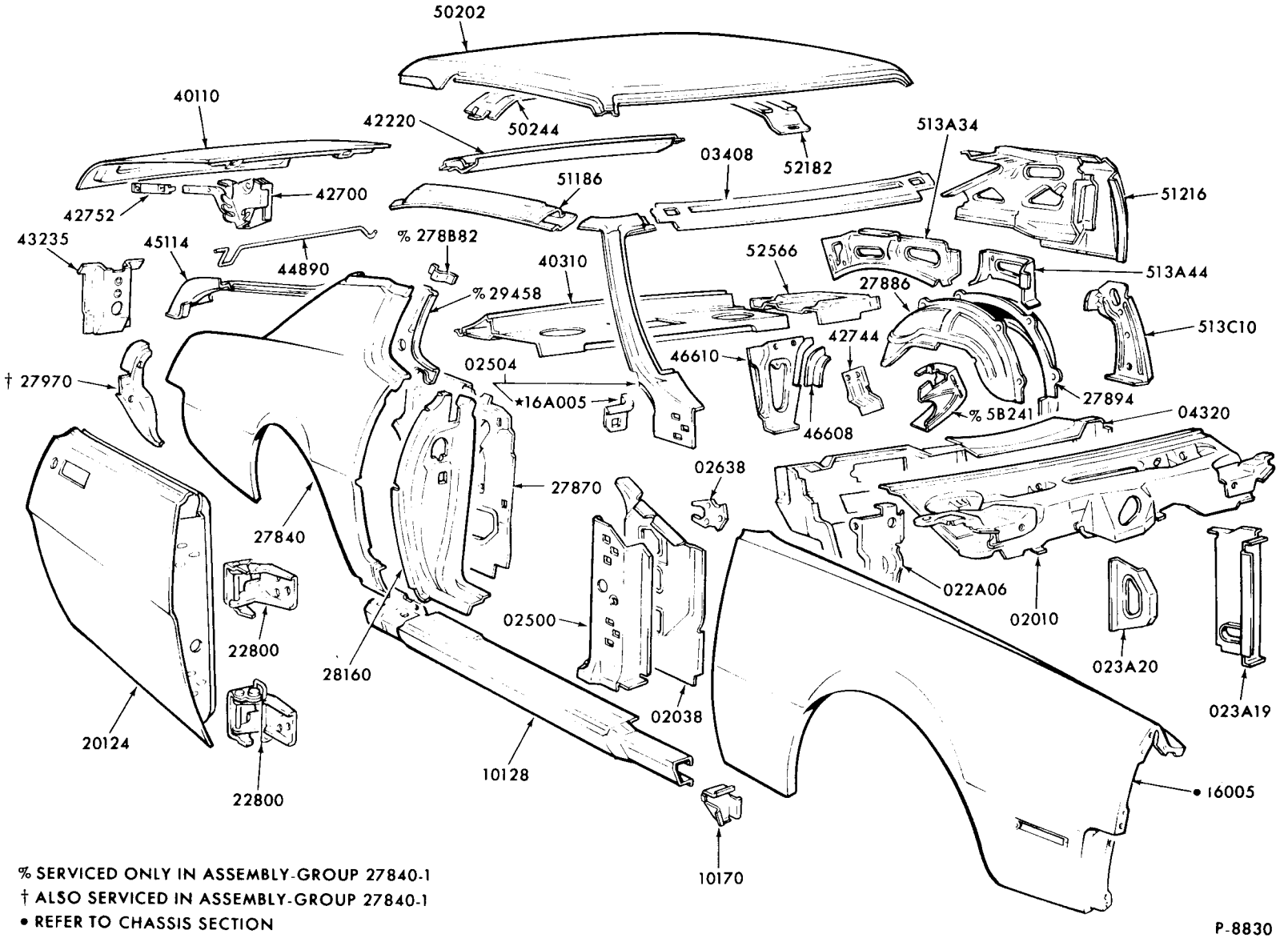


% SERVICED ONLY IN ASSEMBLY-GROUP 27840-1
† ALSO SERVICED IN ASSEMBLY-GROUP 27840-1
• REFER TO CHASSIS SECTION

P-8830

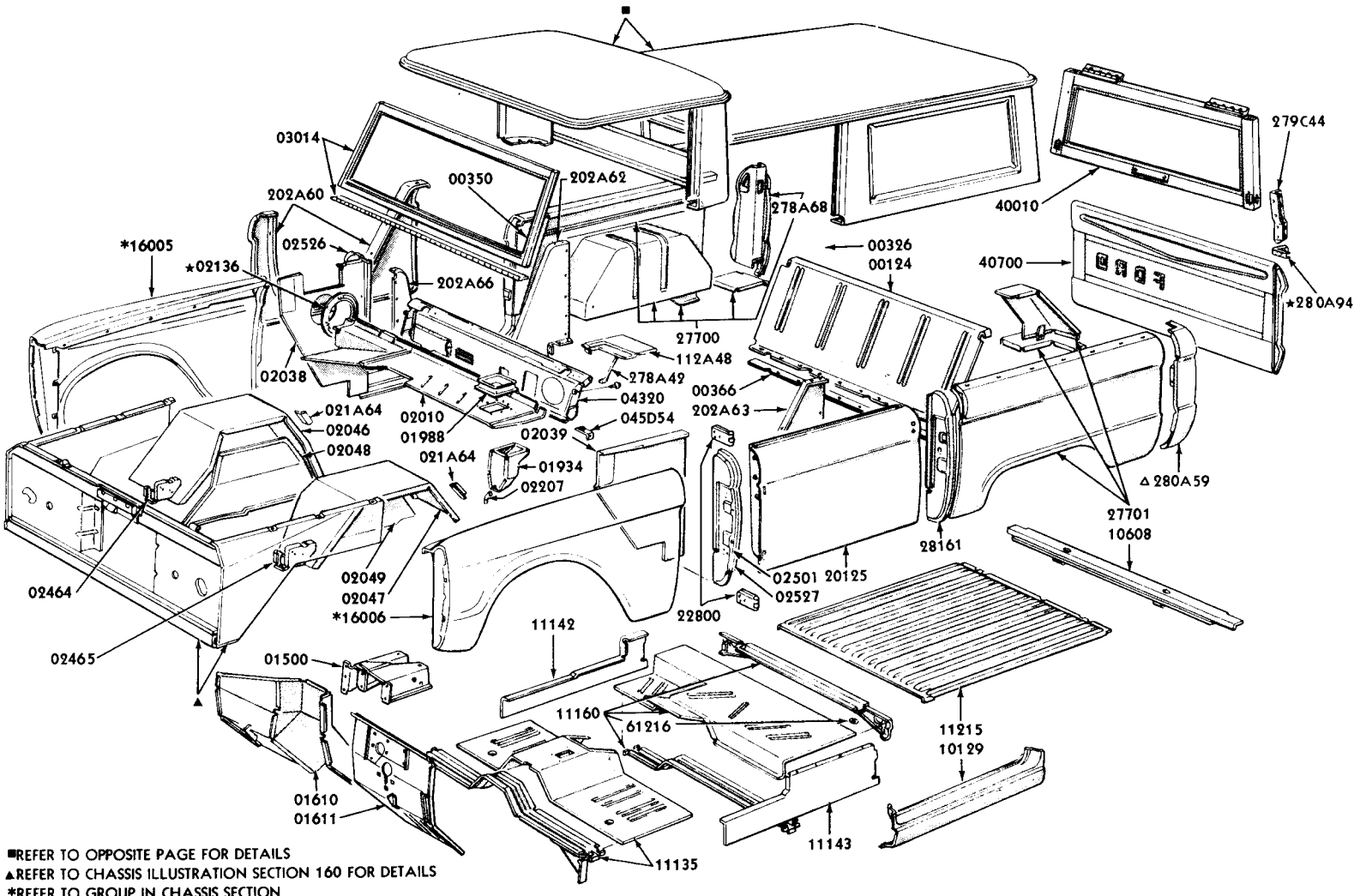


■REFER TO OPPOSITE PAGE FOR DETAILS
▲REFER TO CHASSIS ILLUSTRATION SECTION 160 FOR DETAILS
*REFER TO GROUP IN CHASSIS SECTION
△ALSO INCLUDED IN 27700-1

P-4963


COPYRIGHT © 1975 — FORD MOTOR COMPANY — DEARBORN, MICHIGAN

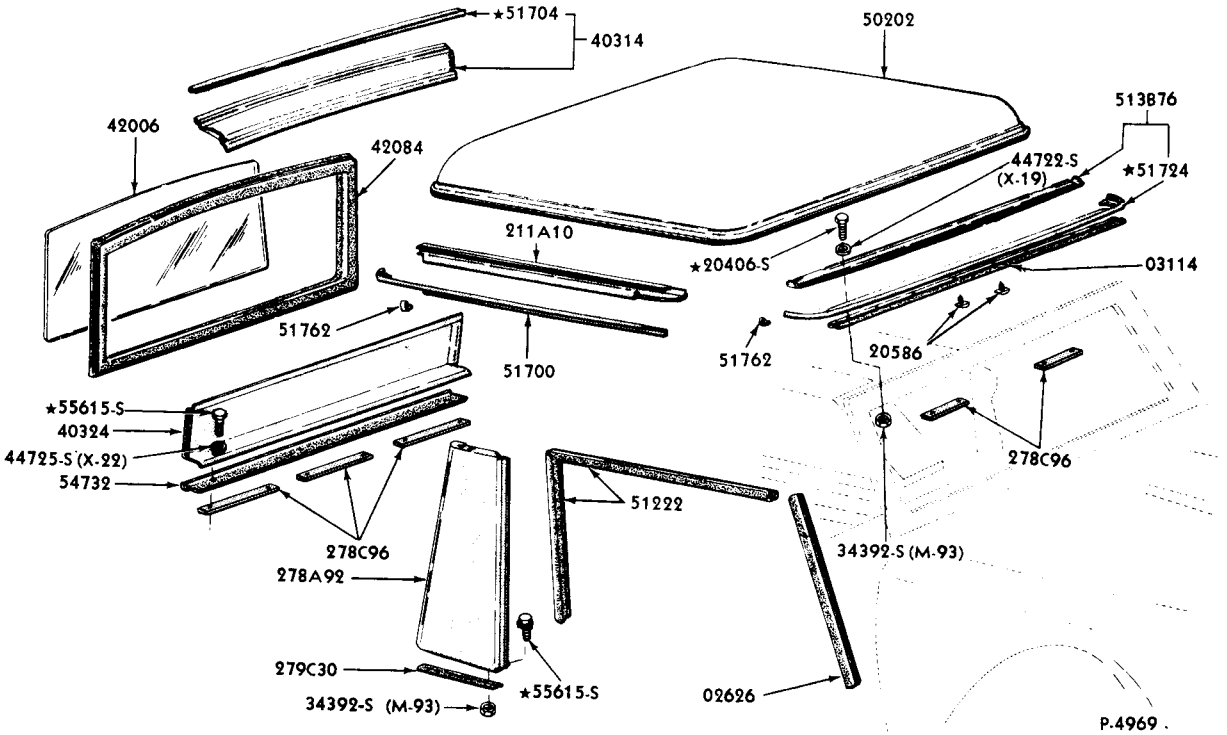


1966/72 BRONCO - ROOF - BODY TYPE 97

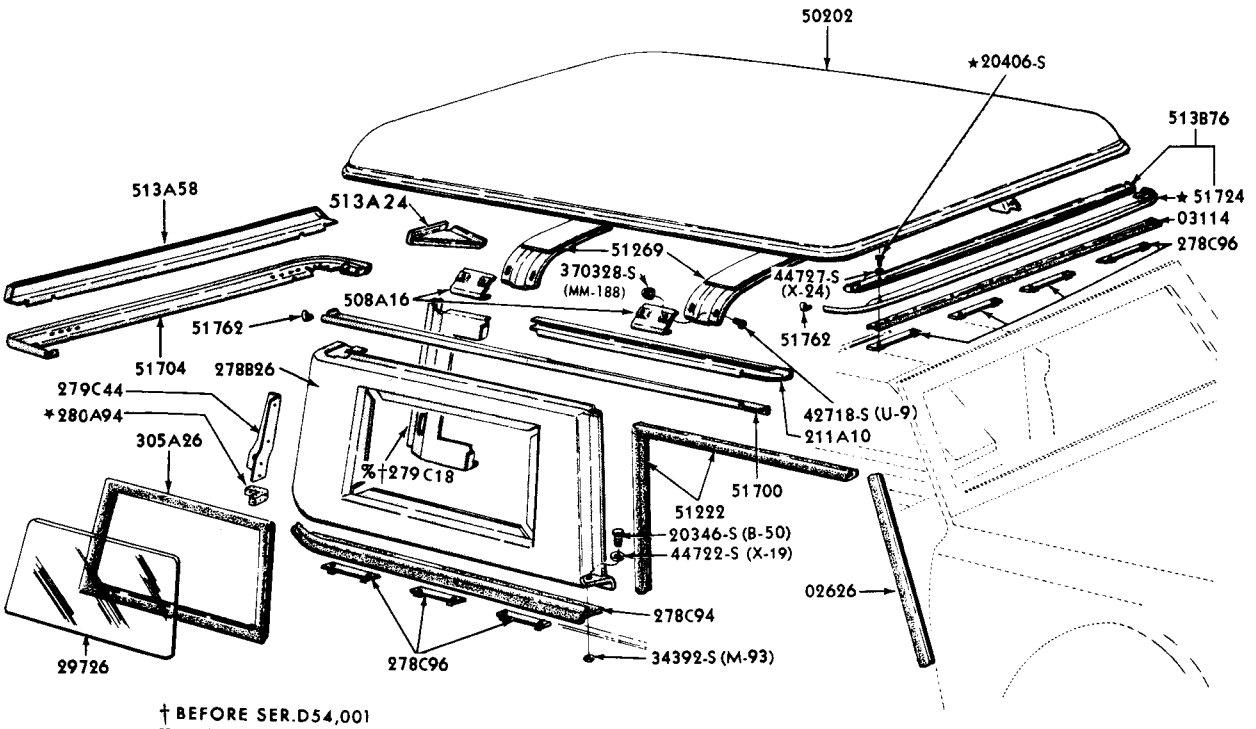


† BEFORE SER.D54,001
% FROM SER.D54,001 REFER TO GROUPS 279C20-1,279C44-5 & 279C72-3

P-4968

1966/72 BRONCO - ROOF - BODY TYPE 98

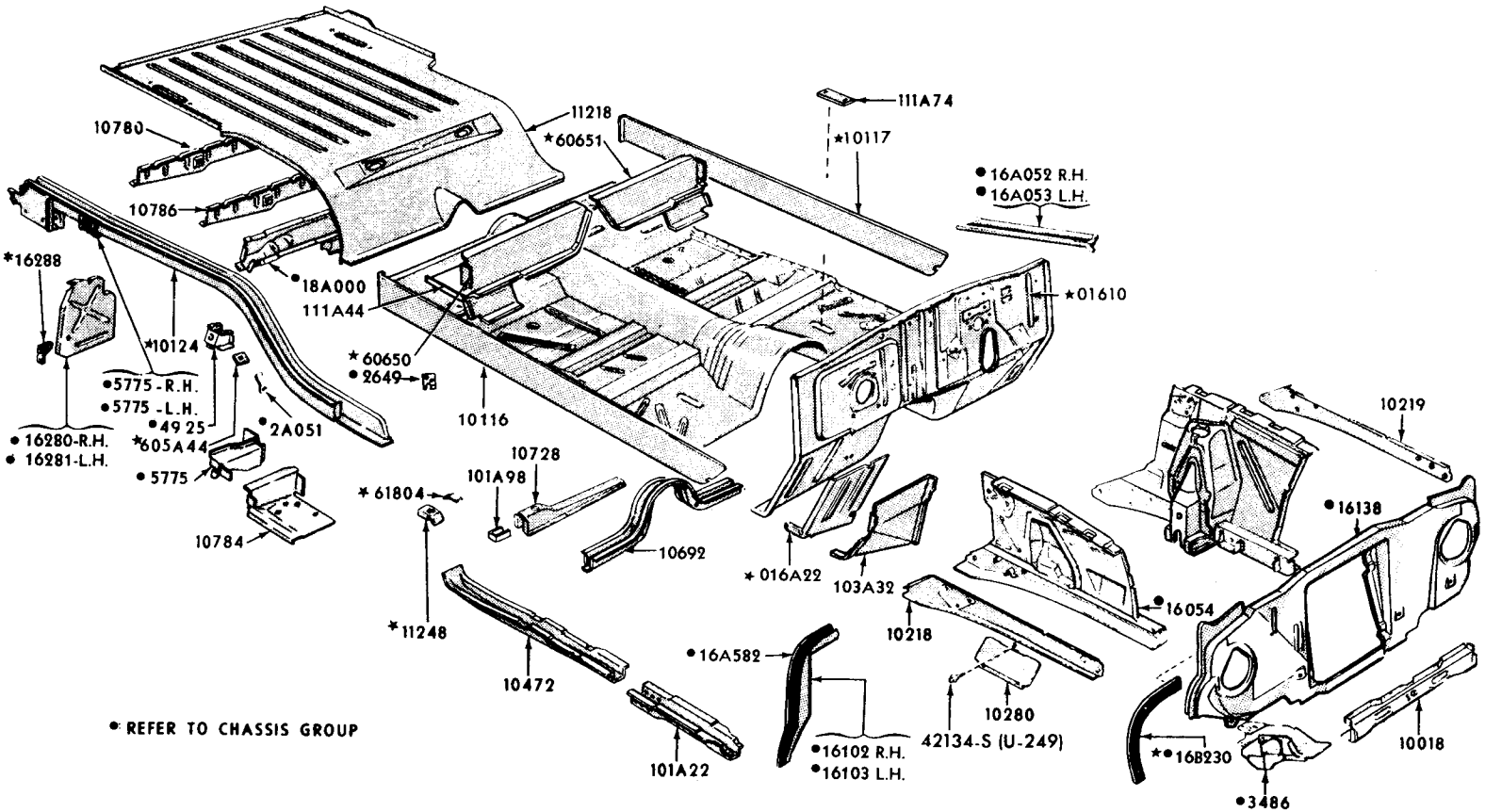


1965 FALCON - BODY TYPES 54, 59, 62, 63, 66, 71


COPYRIGHT © 1975 — FORD MOTOR COMPANY — DEARBORN, MICHIGAN

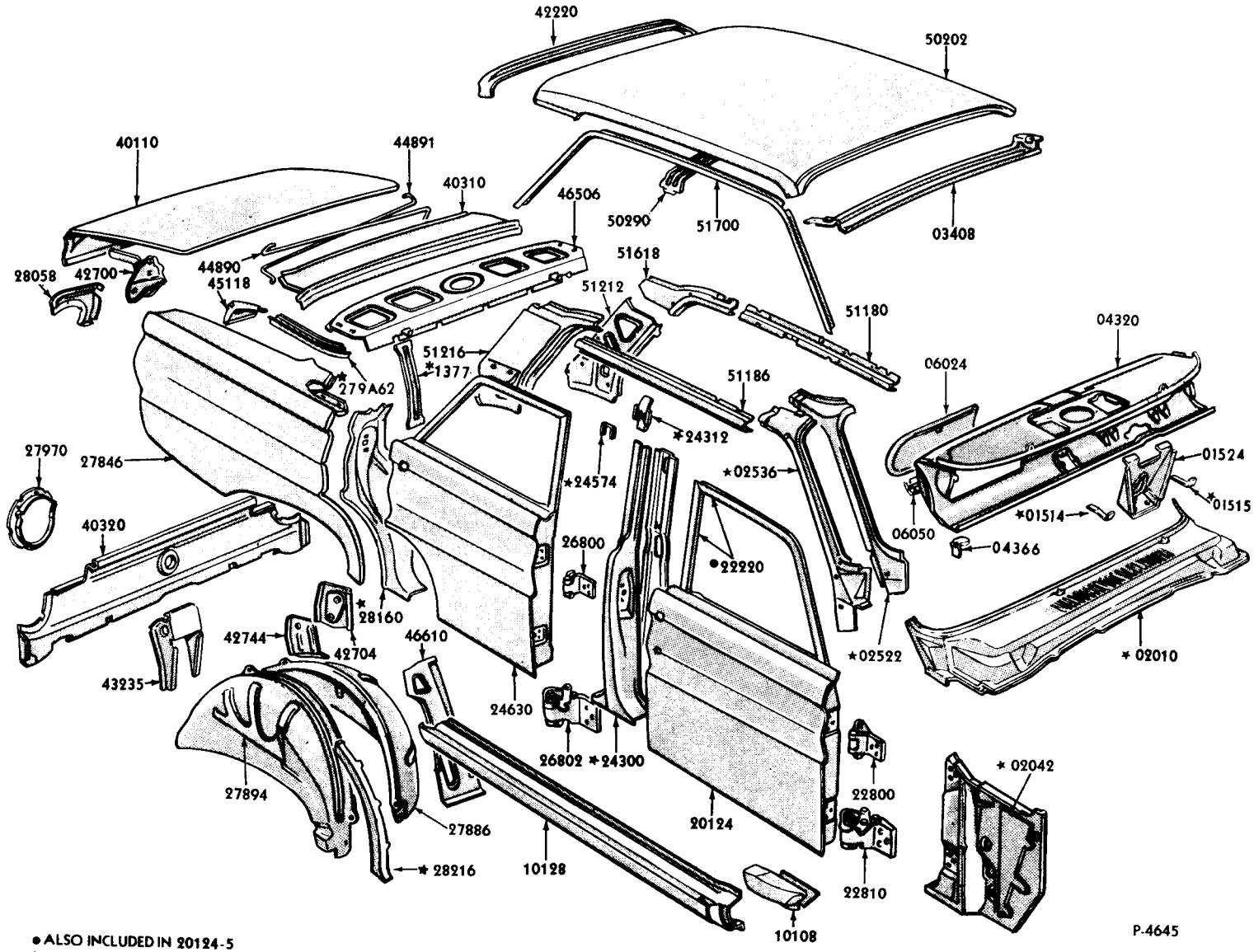


• ALSO INCLUDED IN 20124-5
* REFER TO CHASSIS GROUP NUMBER

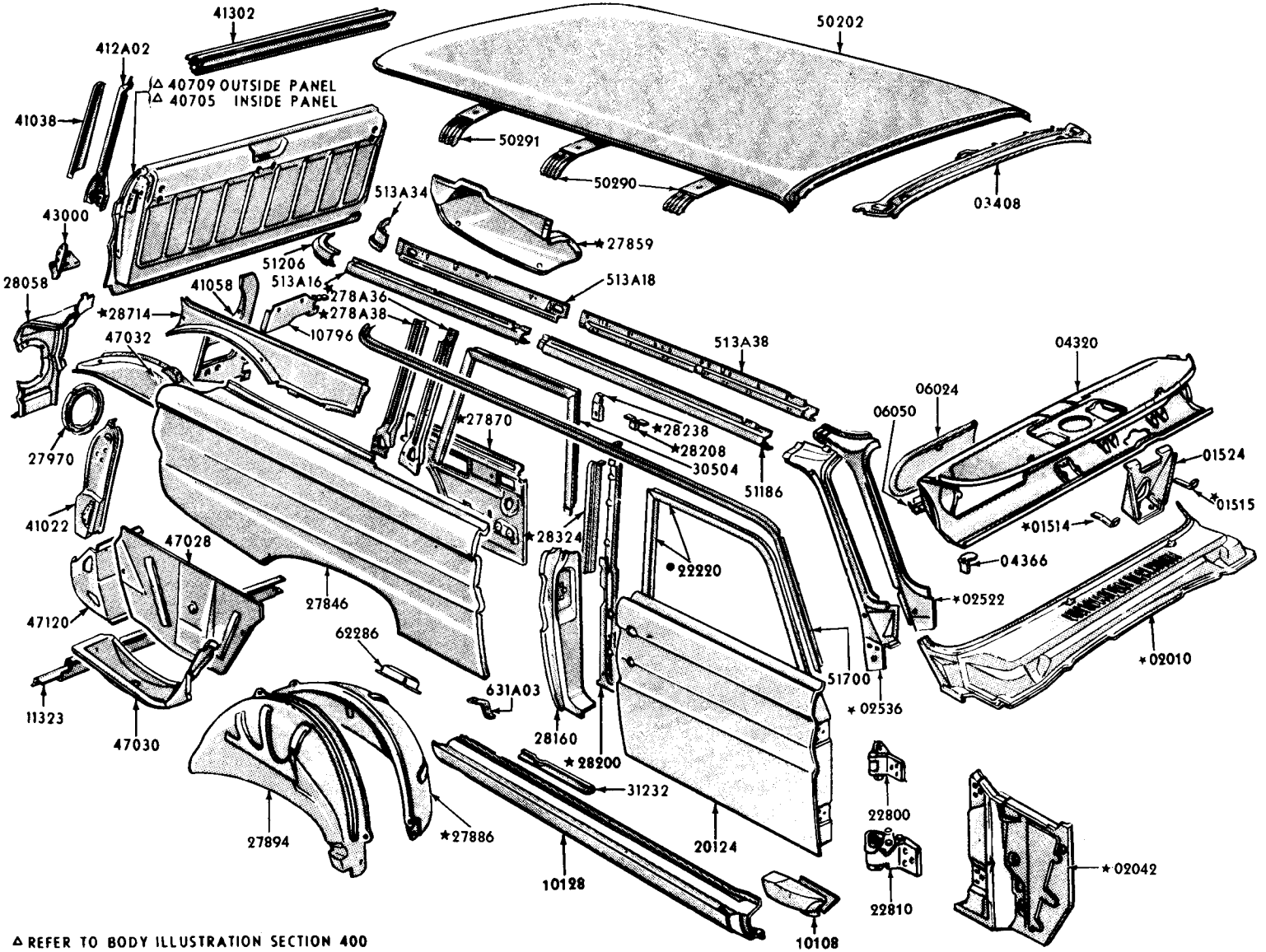



COPYRIGHT © 1975 — FORD MOTOR COMPANY — DEARBORN, MICHIGAN

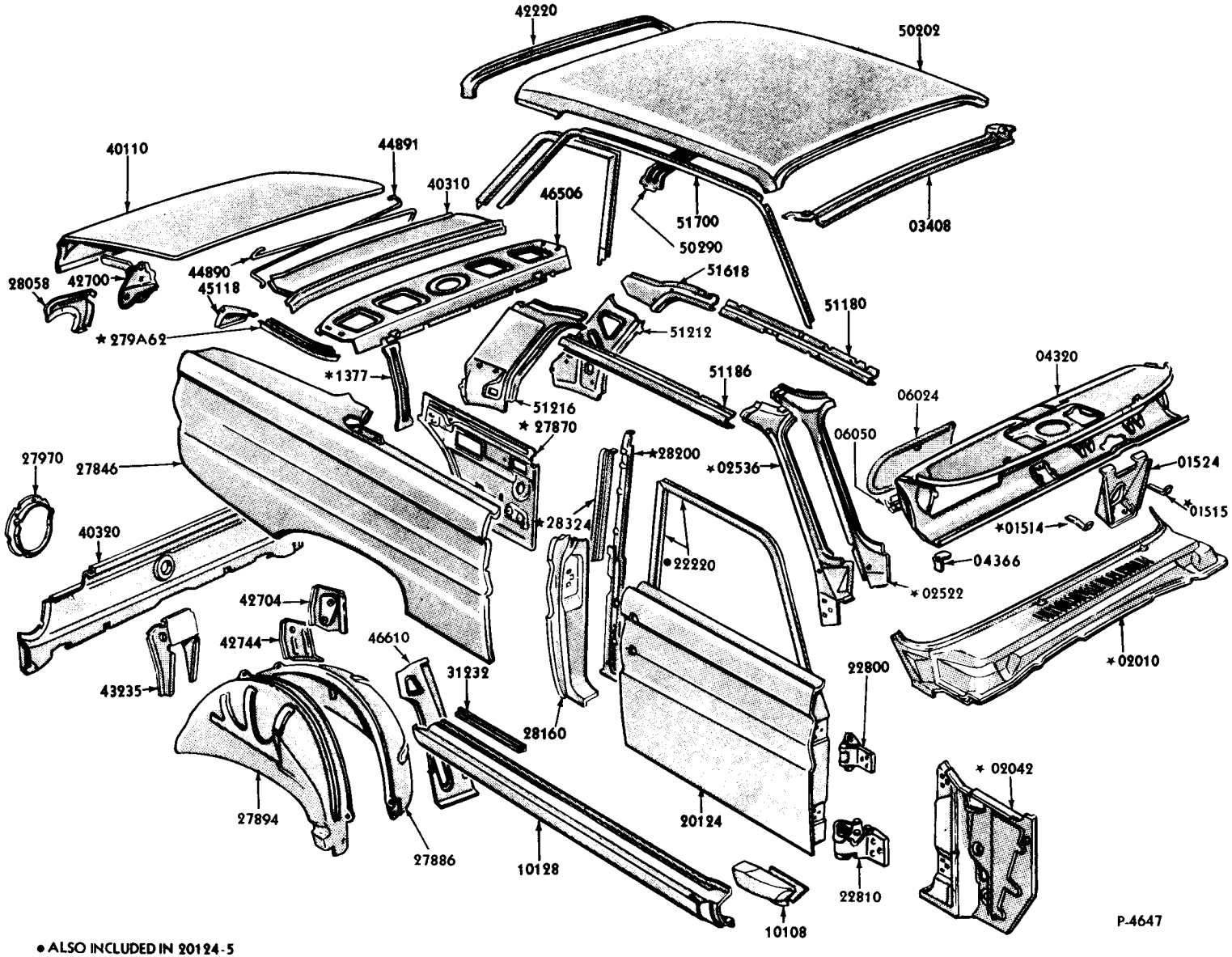


• ALSO INCLUDED IN 20124-5
* REFER TO CHASSIS GROUP NUMBER

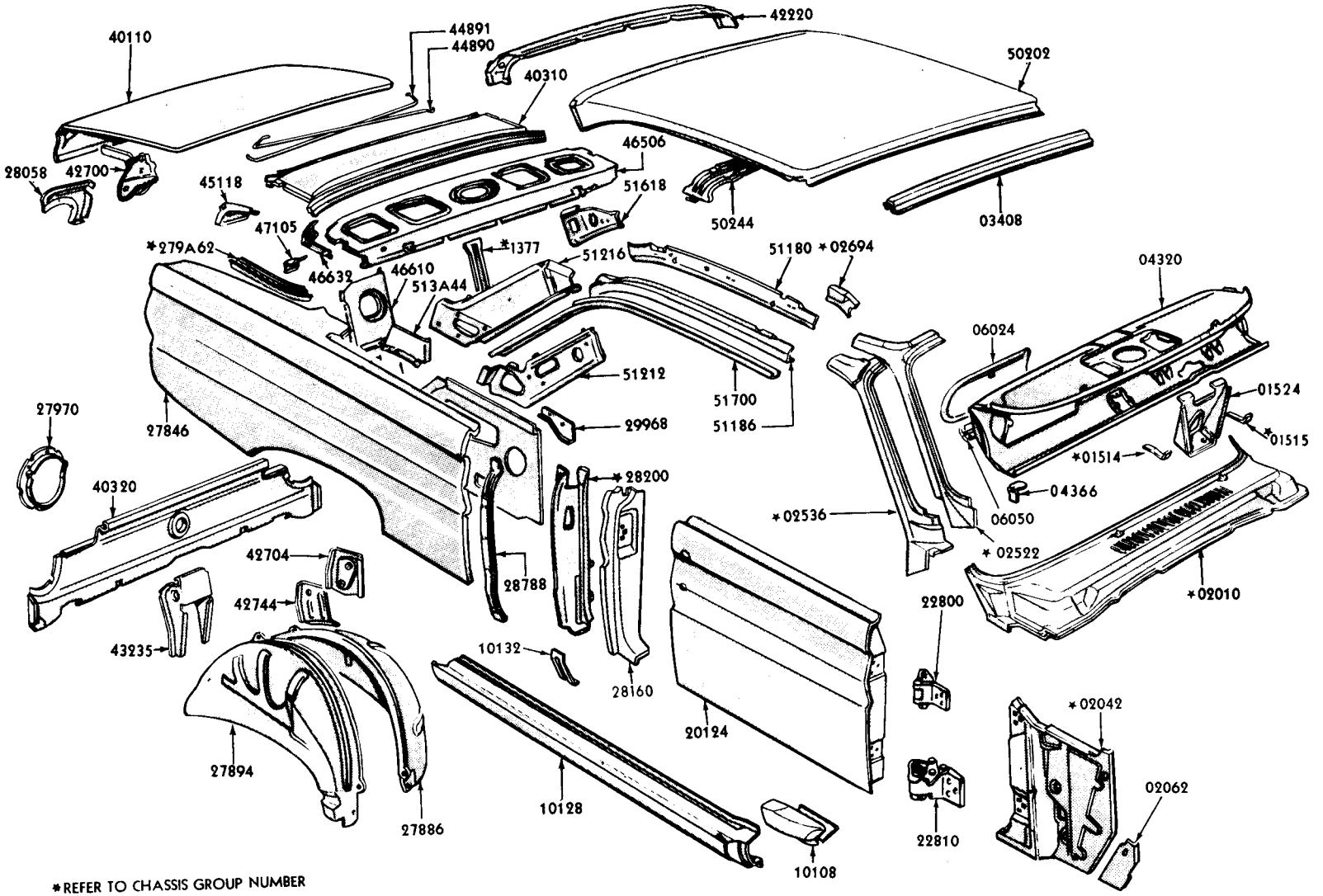



COPYRIGHT © 1975 — FORD MOTOR COMPANY — DEARBORN, MICHIGAN

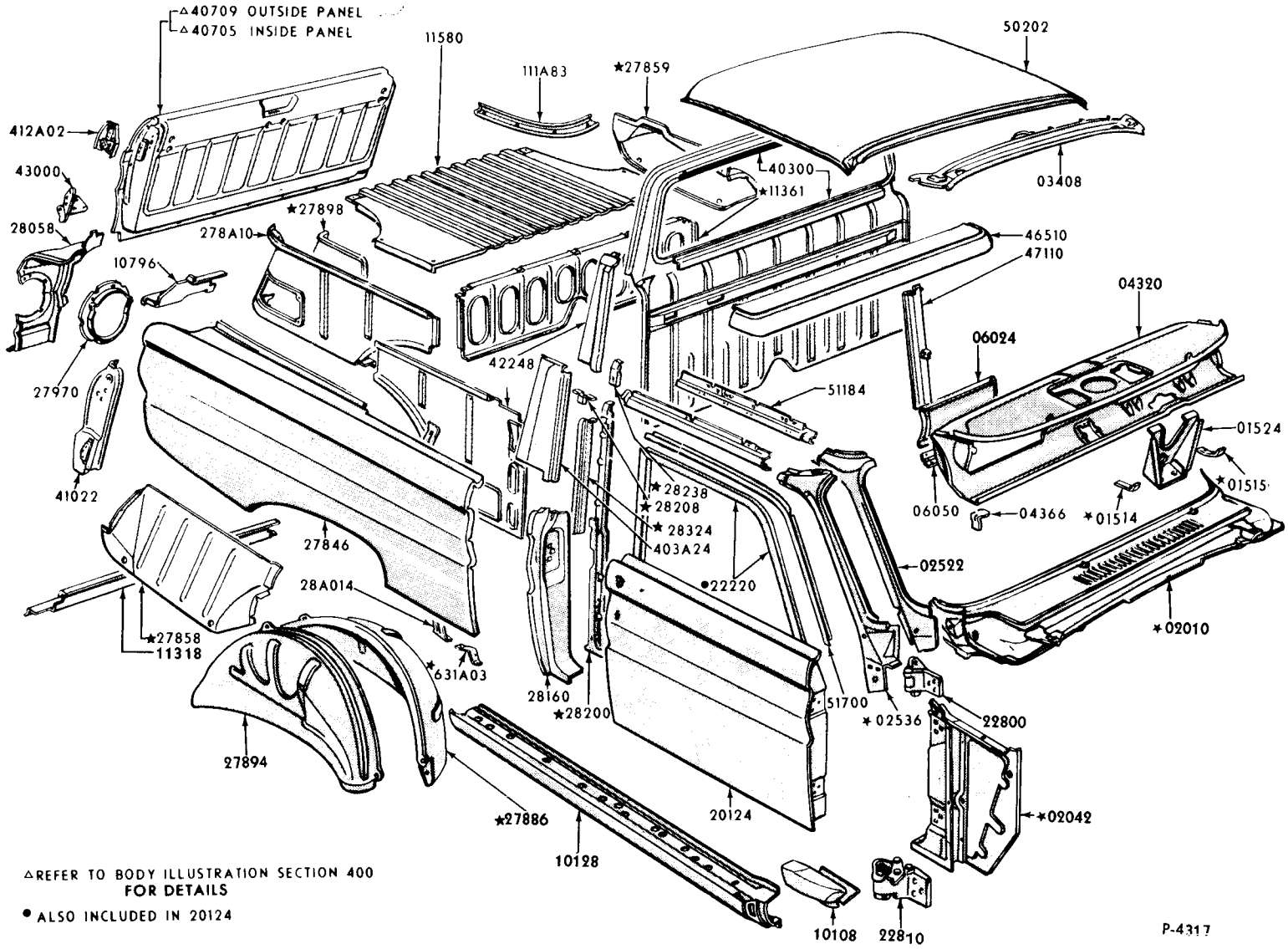


△REFER TO BODY ILLUSTRATION SECTION 400 FOR DETAILS

● ALSO INCLUDED IN 20124

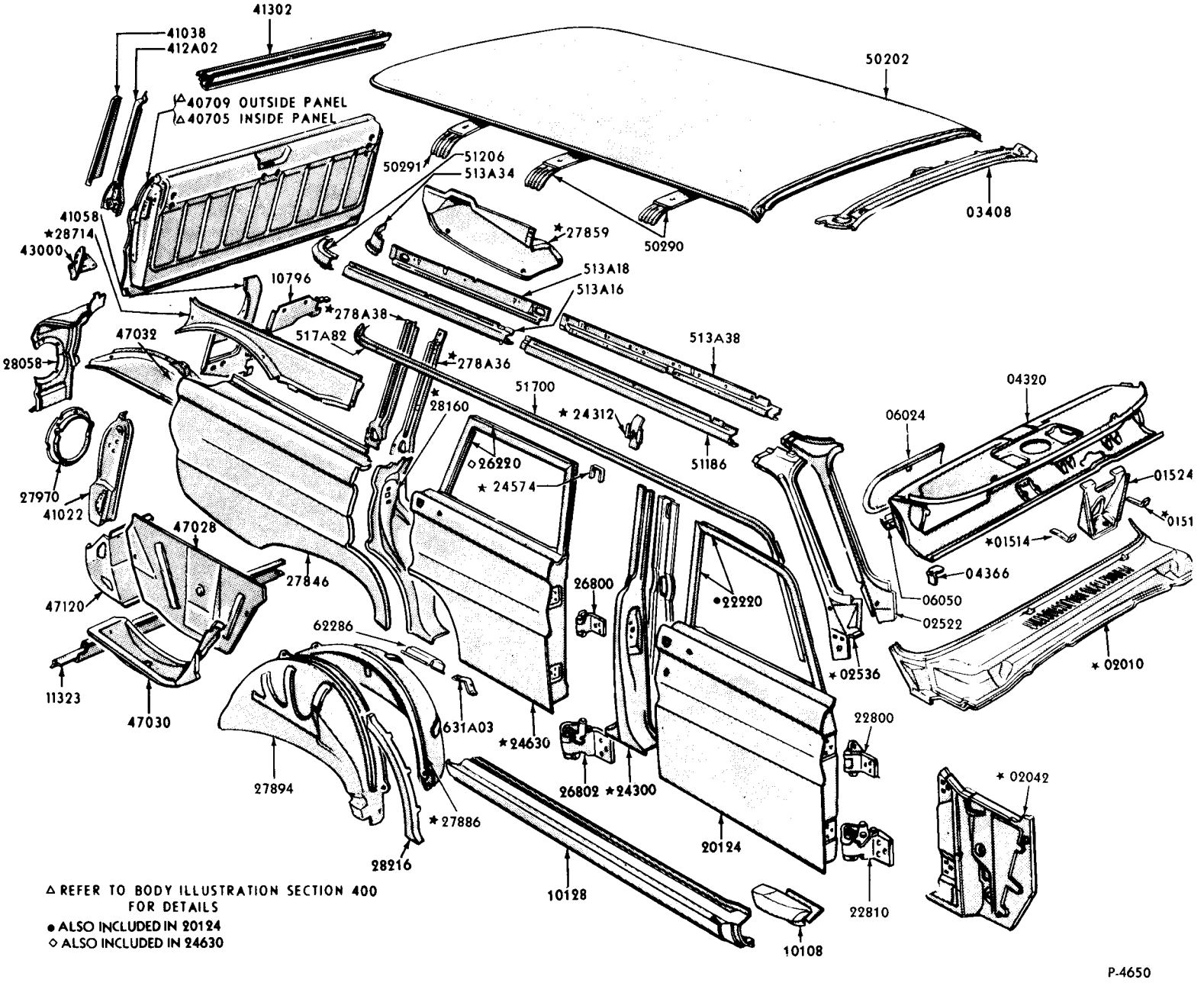


1965 FALCON - BODY TYPE 71 - UPPER BODY



COPYRIGHT © 1975 — FORD MOTOR COMPANY — DEARBORN, MICHIGAN

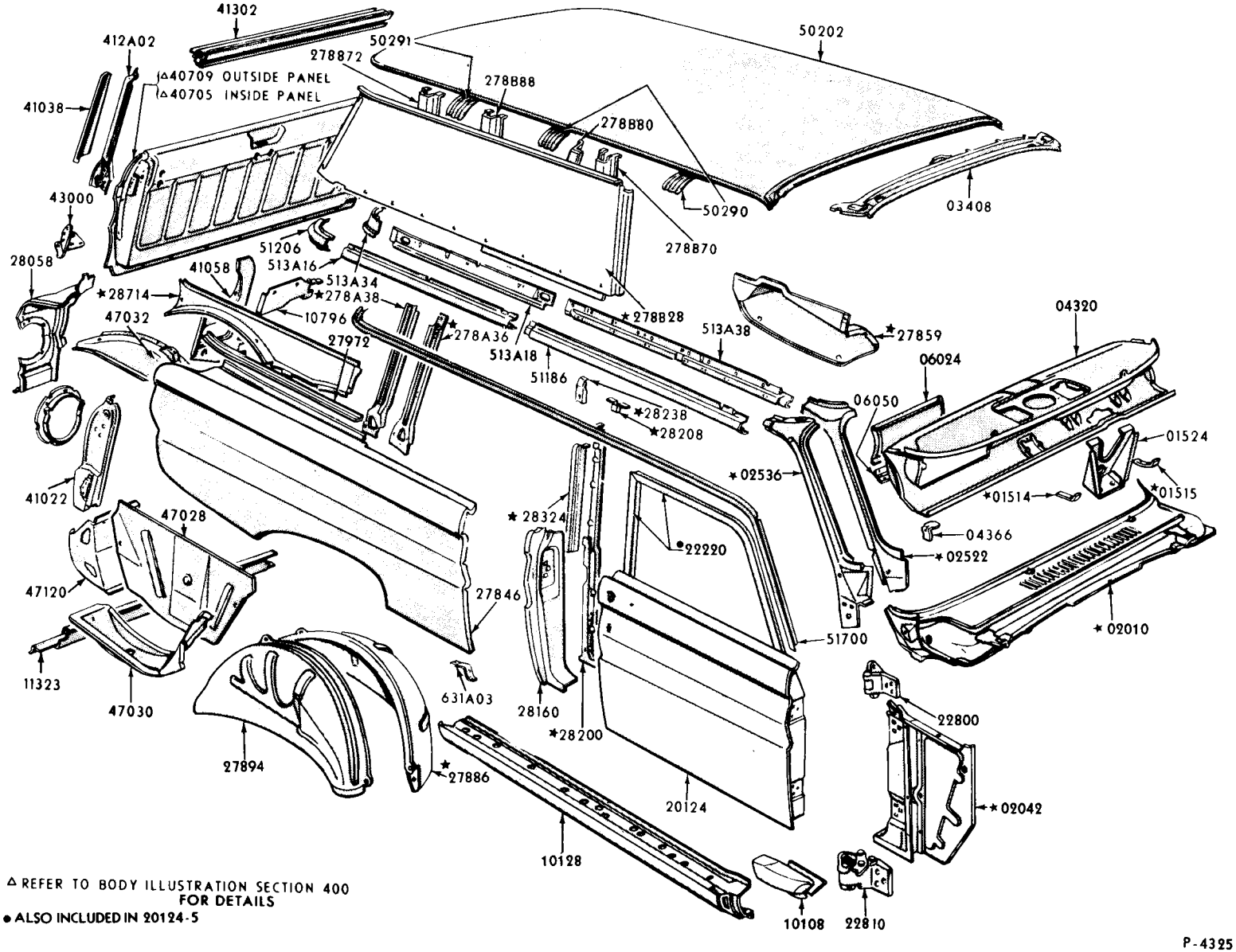


△ REFER TO BODY ILLUSTRATION SECTION 400 FOR DETAILS

● ALSO INCLUDED IN 20124-5

P-4325

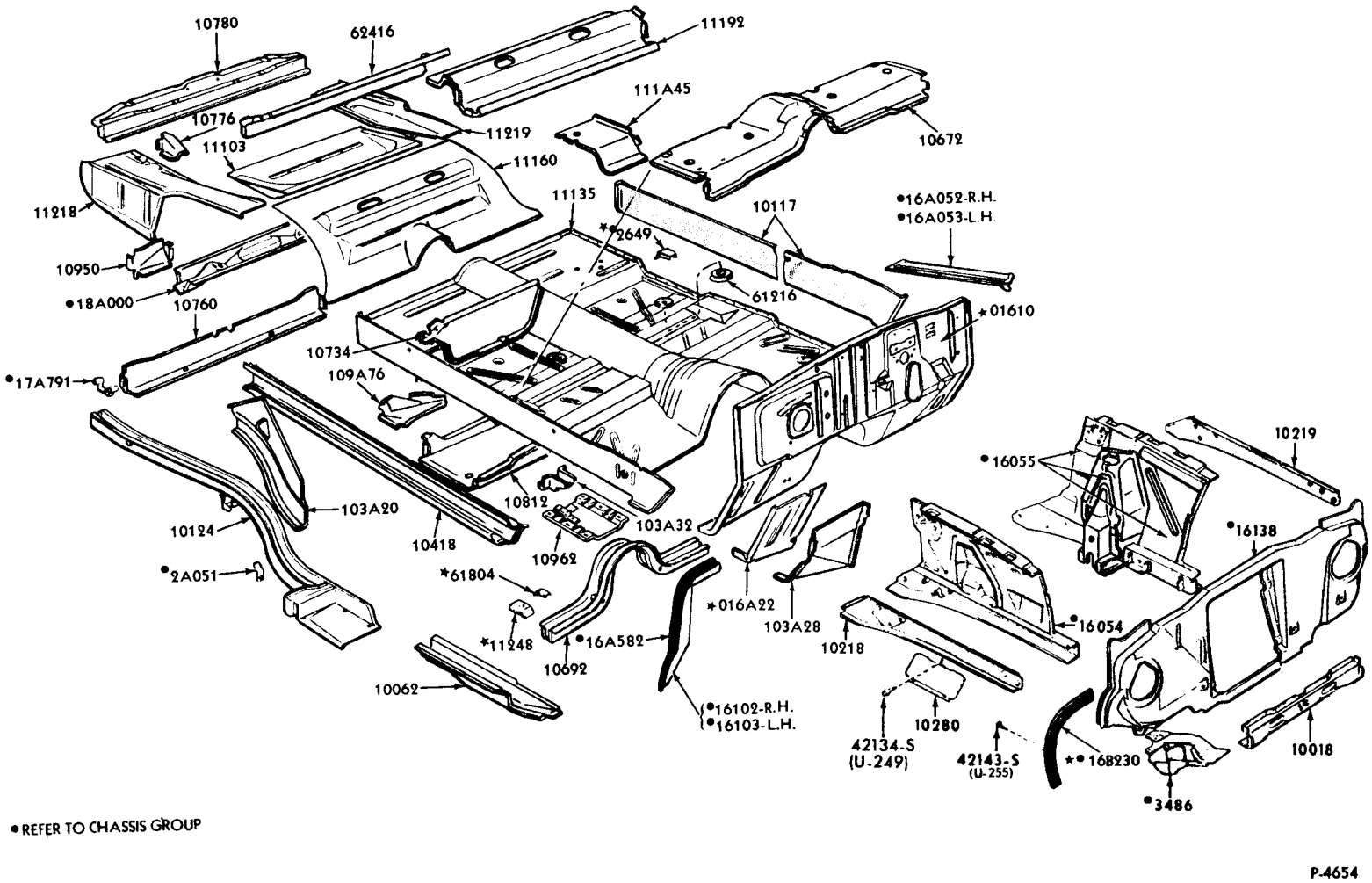


• REFER TO CHASSIS GROUP


COPYRIGHT © 1975 — FORD MOTOR COMPANY — DEARBORN, MICHIGAN

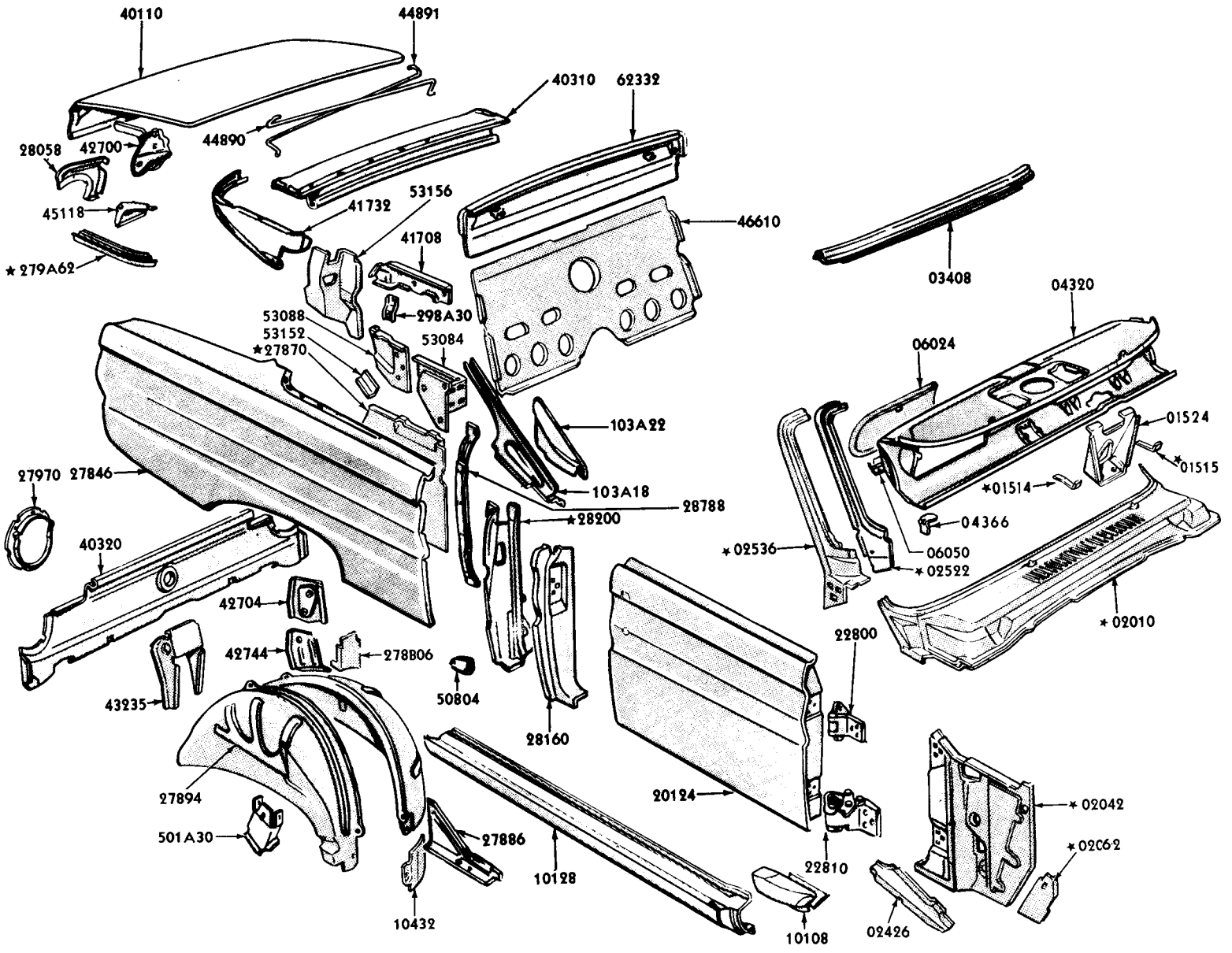
40110
44891
40310
62332
28058
42700
44890
45118
41732
53156
46610
41708
★279A62
03408
04320
53088
298A30
53152
53084
★27870
06024
103A22
01524
★01515
27970
27846
103A18
28788
★01514
★28200
04366
40320
★02536
06050
★02522
42704
★02010
22800
42744
278B06
50804
43235
28160
27894
20124
★02042
501A30
27886
★02062
10128
22810
10432
10108
02426
P-4651

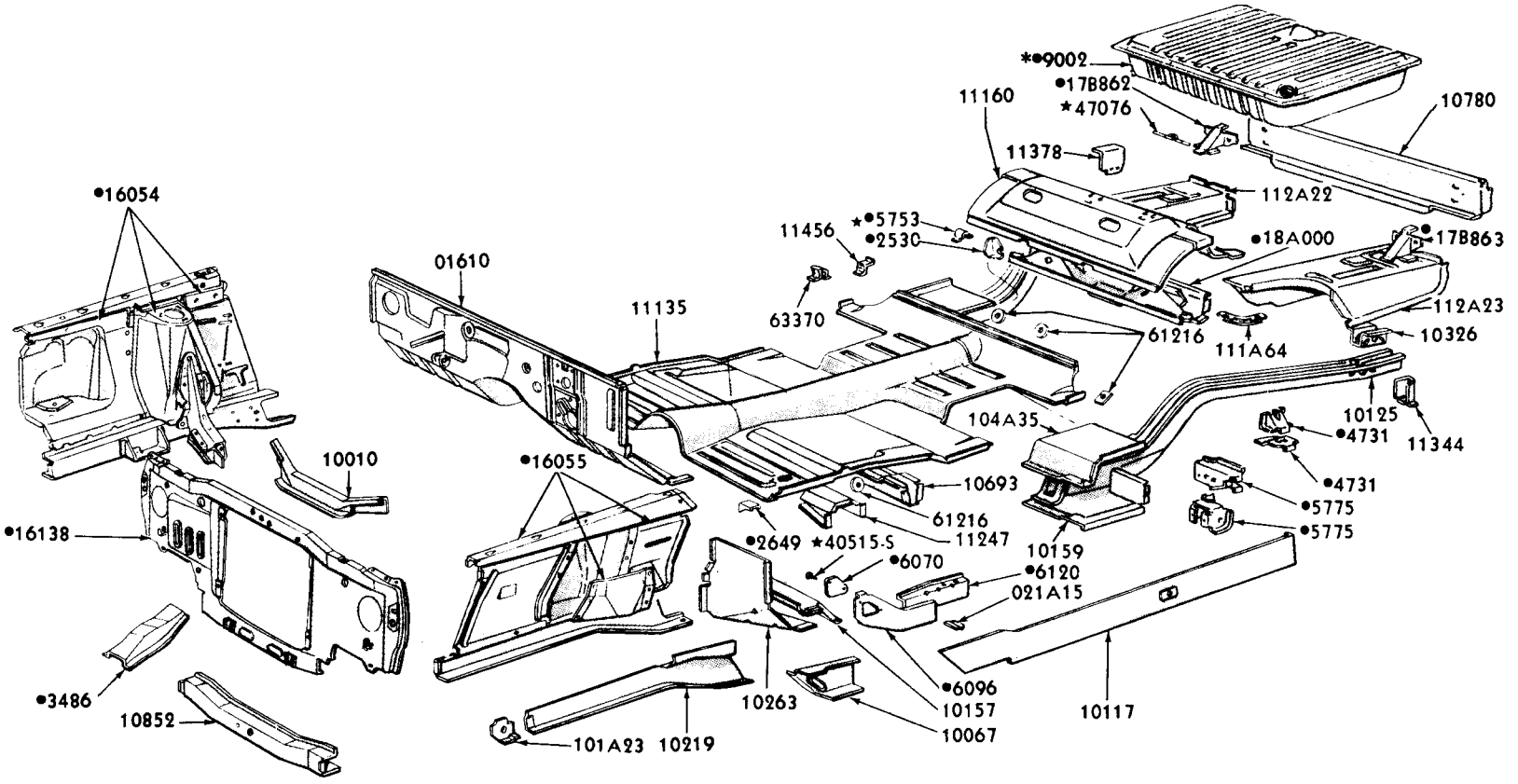


•REFER TO GROUP IN CHASSIS SECTION
*NOT PART OF UNDERBODY

P-5142


COPYRIGHT © 1975 — FORD MOTOR COMPANY — DEARBORN, MICHIGAN

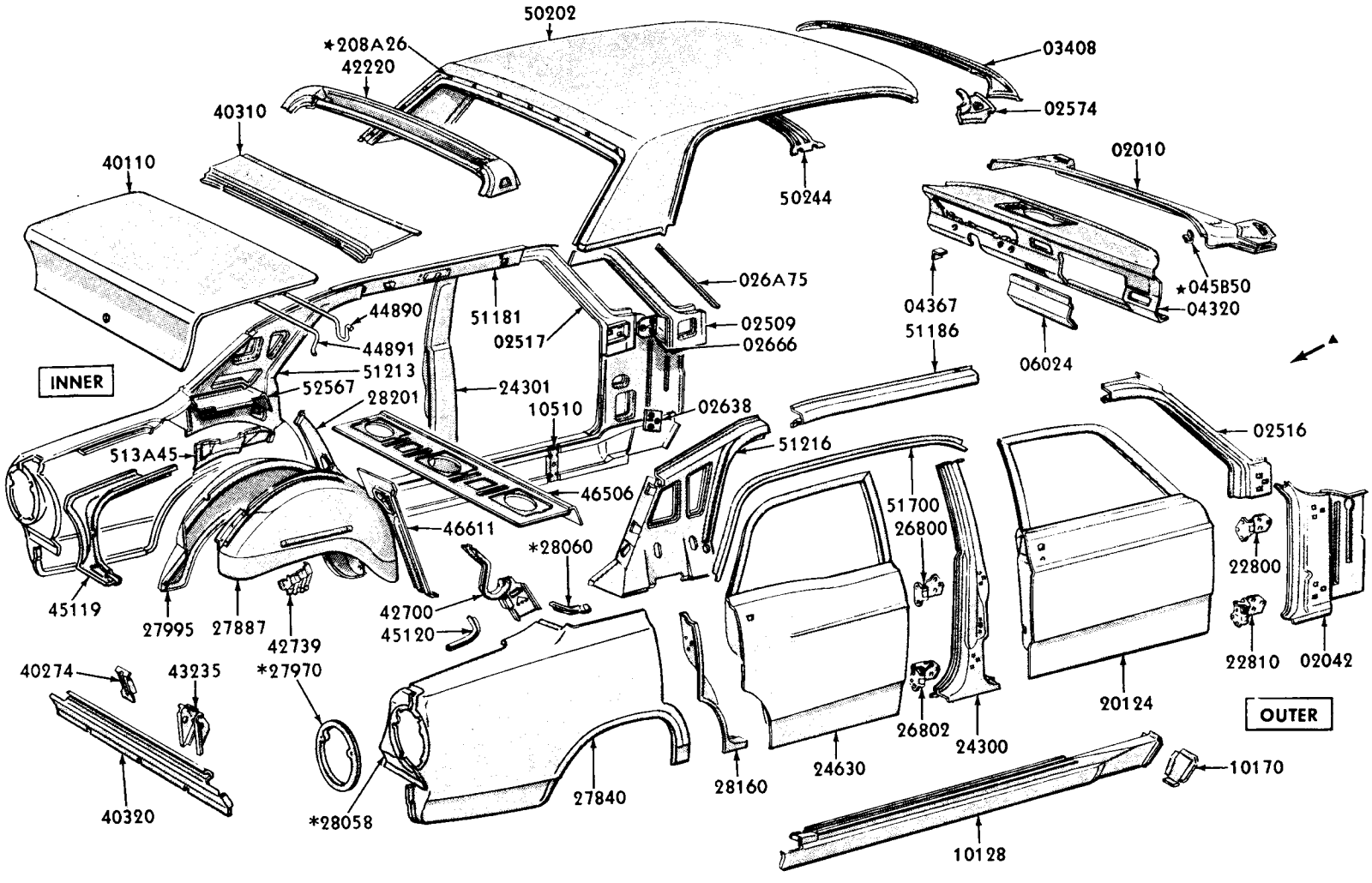


*ALSO INCLUDED IN 27840-1

▲FOR FRONT BODY PARTS REFER TO UNDERBODY ILLUSTRATION

P-5026

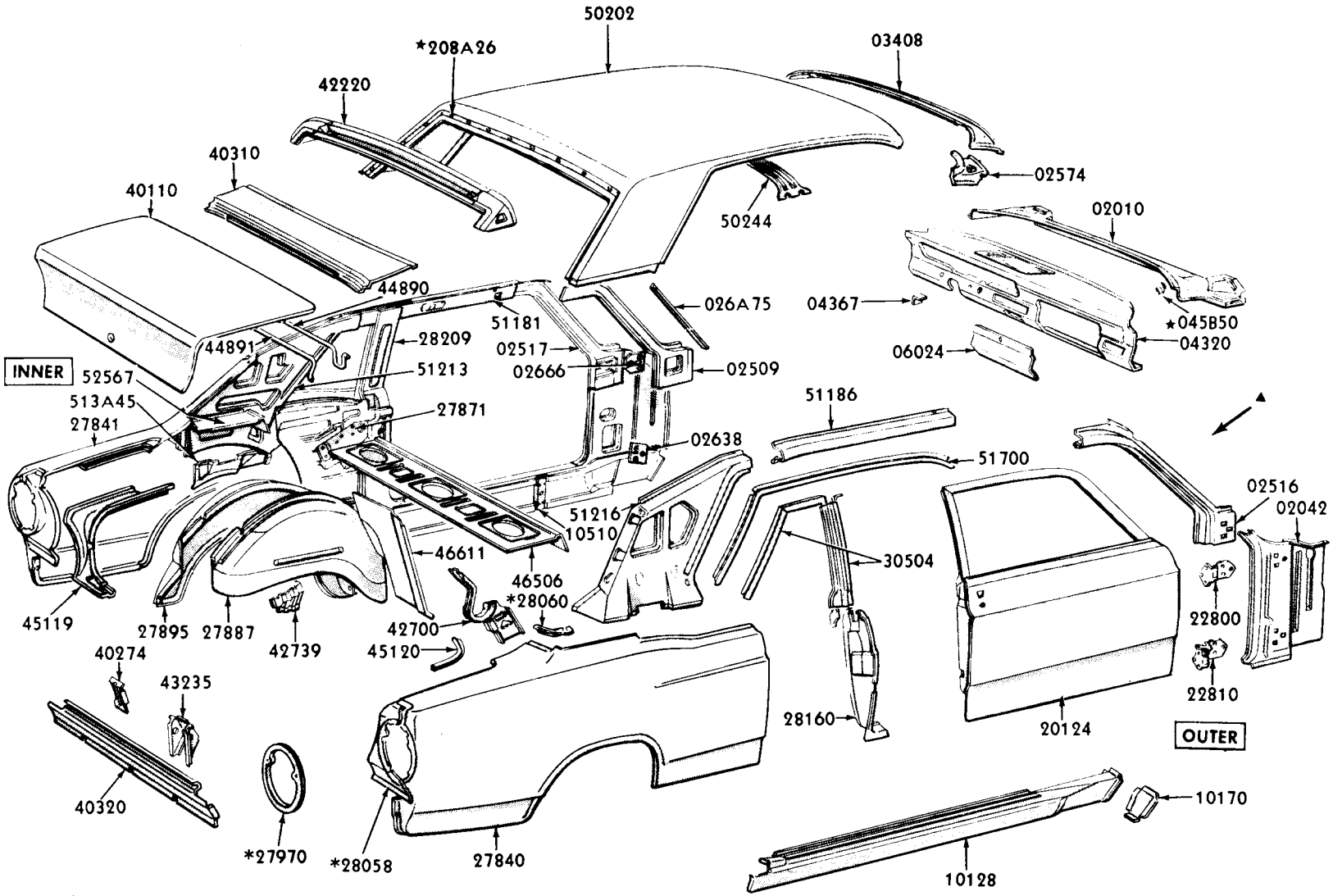


*ALSO INCLUDED IN 27840-1

▲FOR FRONT BODY PARTS REFER TO UNDERBODY ILLUSTRATION

P-5027


COPYRIGHT © 1975 — FORD MOTOR COMPANY — DEARBORN, MICHIGAN

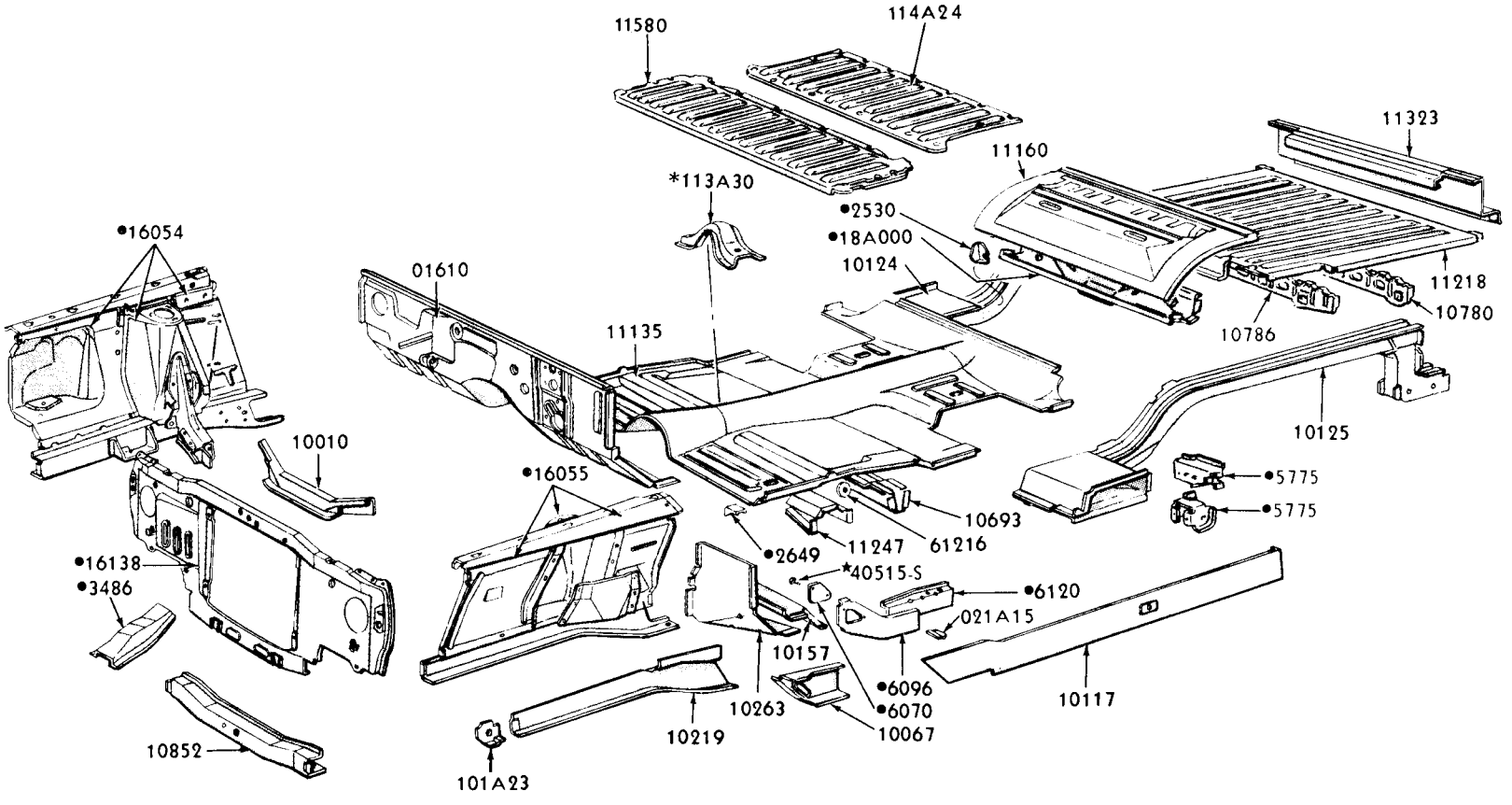


•REFER TO GROUP IN CHASSIS SECTION
*USED ON (66D) ONLY

P-5031

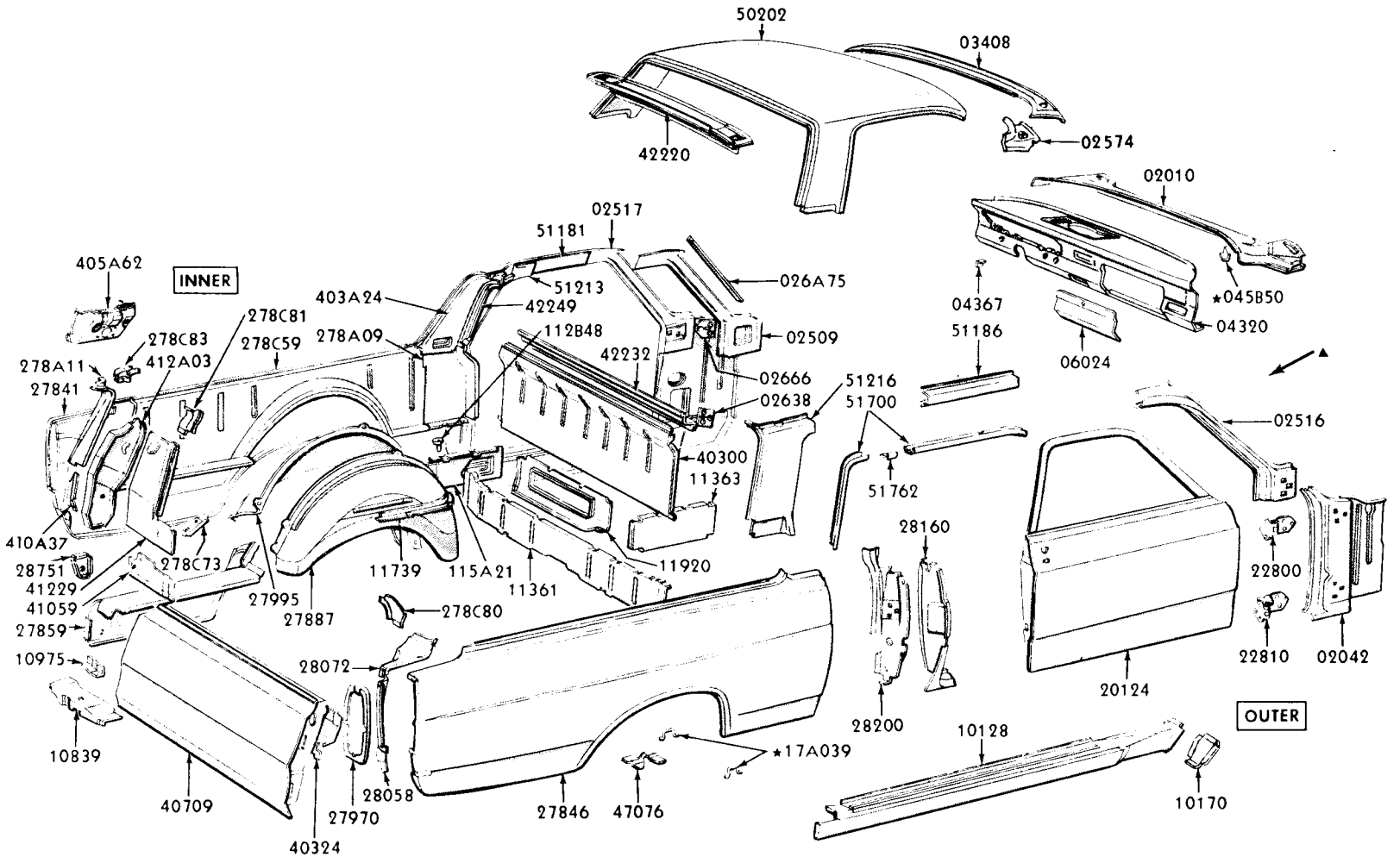


▲FOR FRONT BODY PART REFER TO UNDERBODY ILLUSTRATION

P-5028

1966 FALCON - BODY TYPE 66 - UPPER BODY



COPYRIGHT © 1975 — FORD MOTOR COMPANY — DEARBORN, MICHIGAN

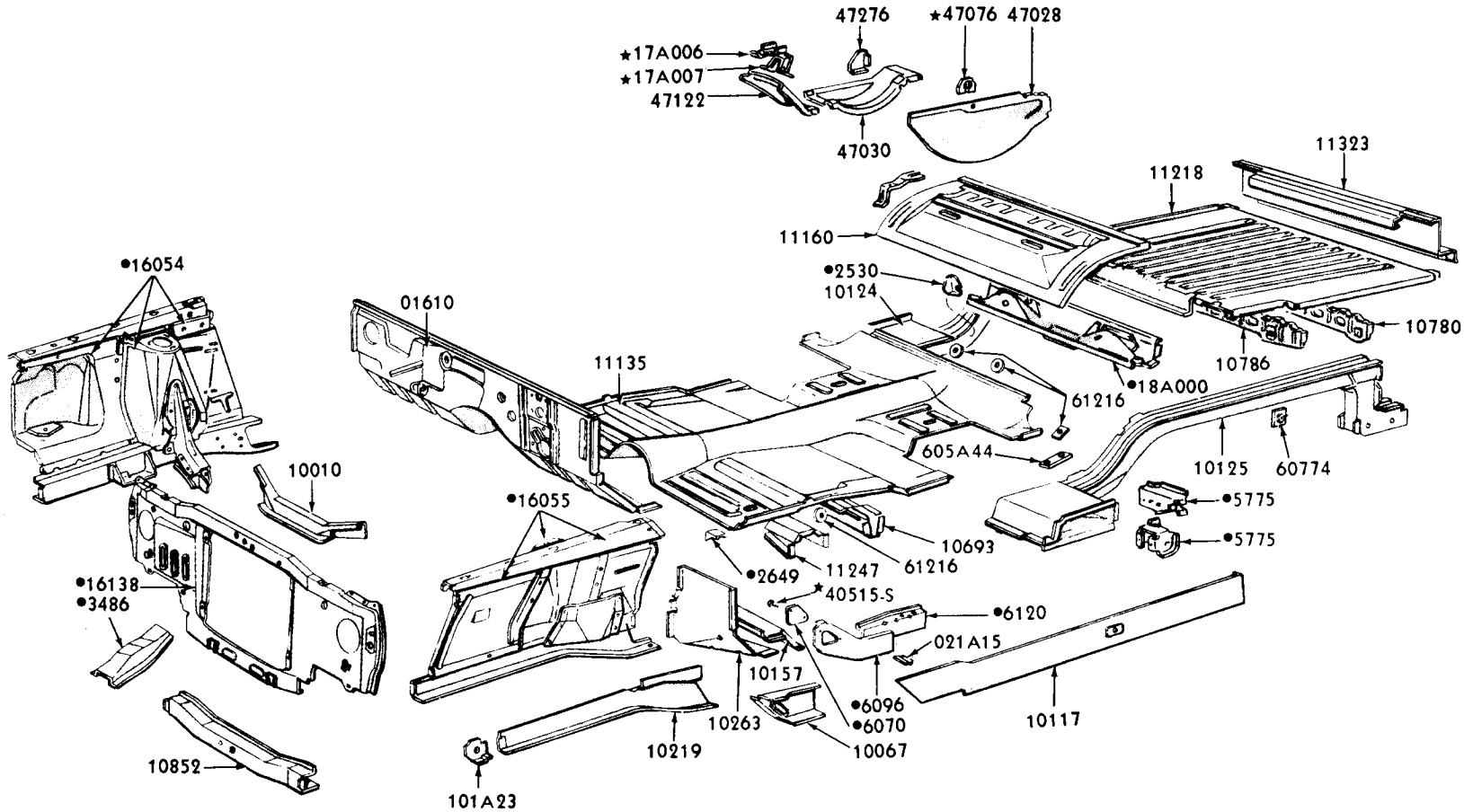


•REFER TO GROUP IN CHASSIS SECTION

P-5148

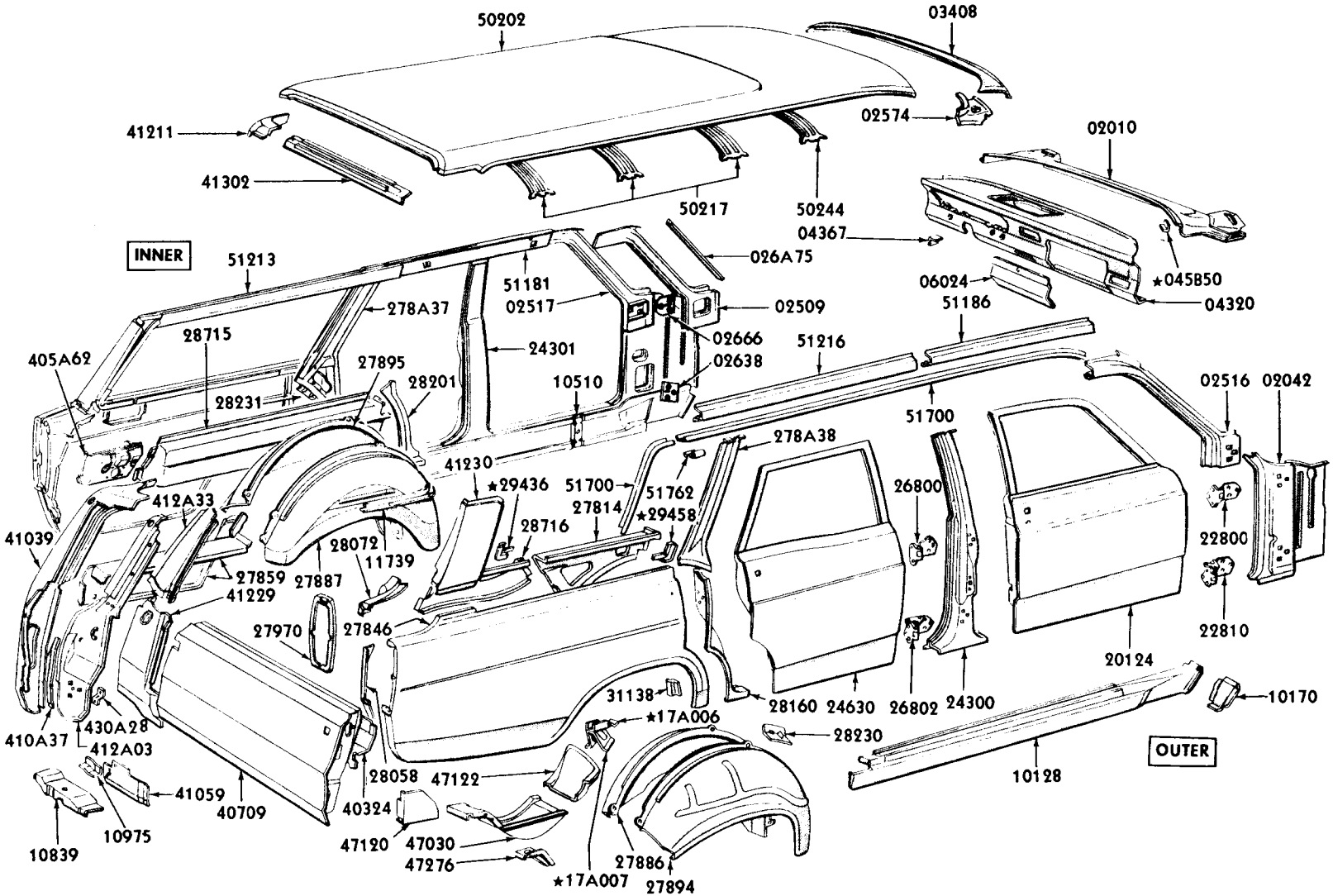


▲FOR FRONT BODY PARTS REFER TO UNDERBODY ILLUSTRATION

P-5141


COPYRIGHT © 1975 — FORD MOTOR COMPANY — DEARBORN, MICHIGAN

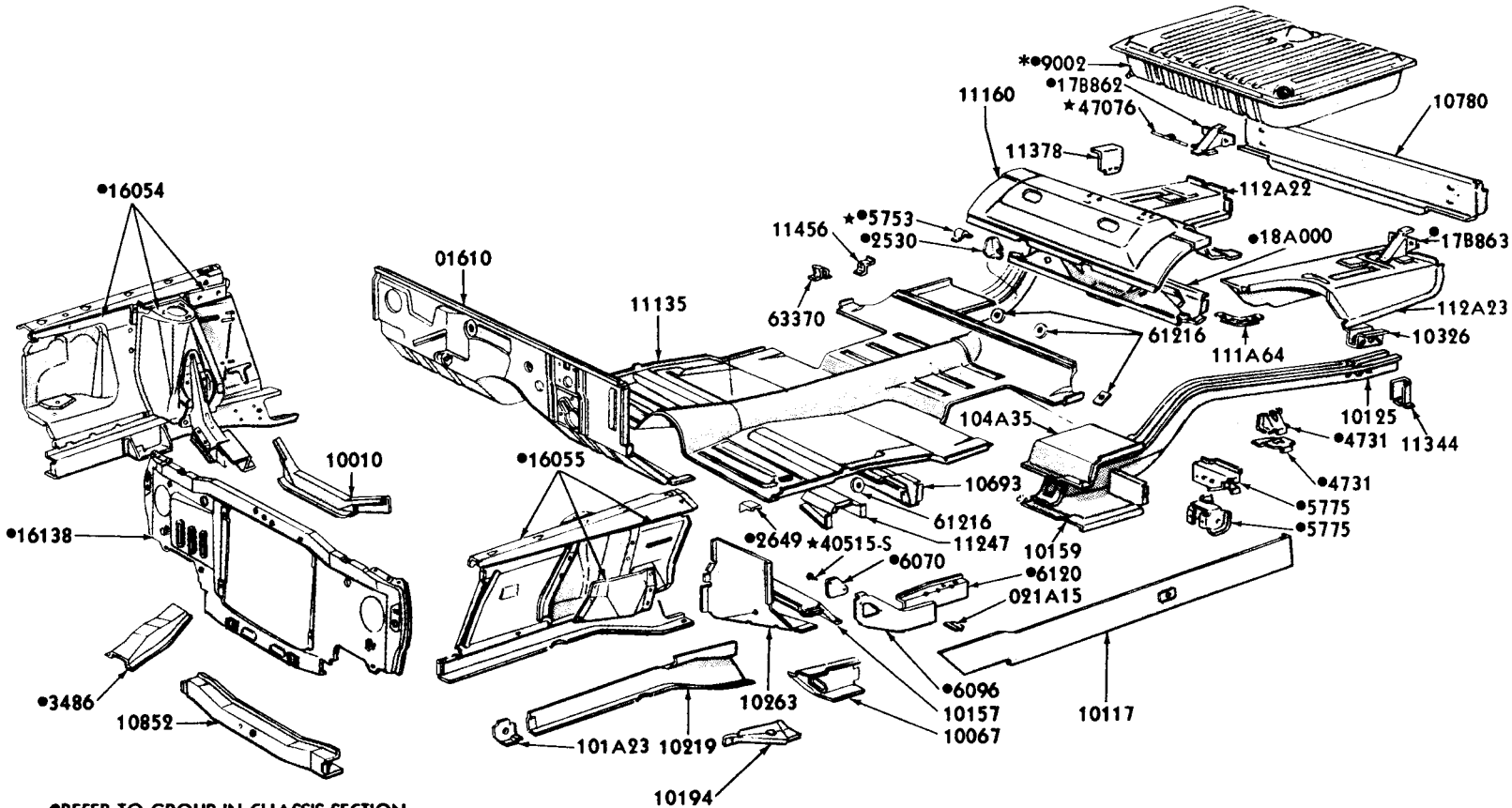


•REFER TO GROUP IN CHASSIS SECTION
*NOT PART OF UNDERBODY

P-6073

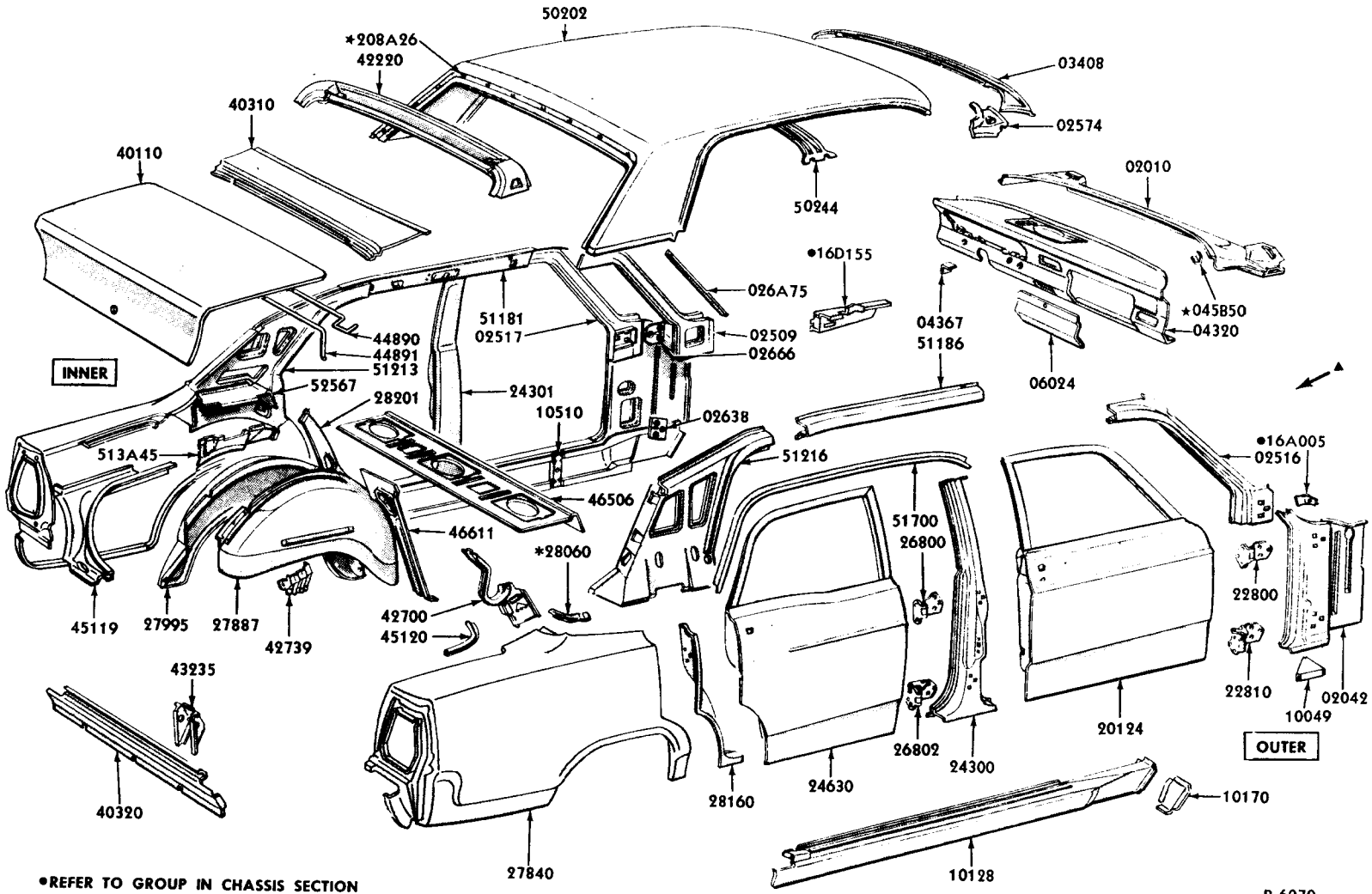


•REFER TO GROUP IN CHASSIS SECTION
*ALSO INCLUDED IN 27840-1
▲FOR FRONT BODY PARTS REFER TO UNDERBODY ILLUSTRATION


COPYRIGHT © 1975 — FORD MOTOR COMPANY — DEARBORN, MICHIGAN

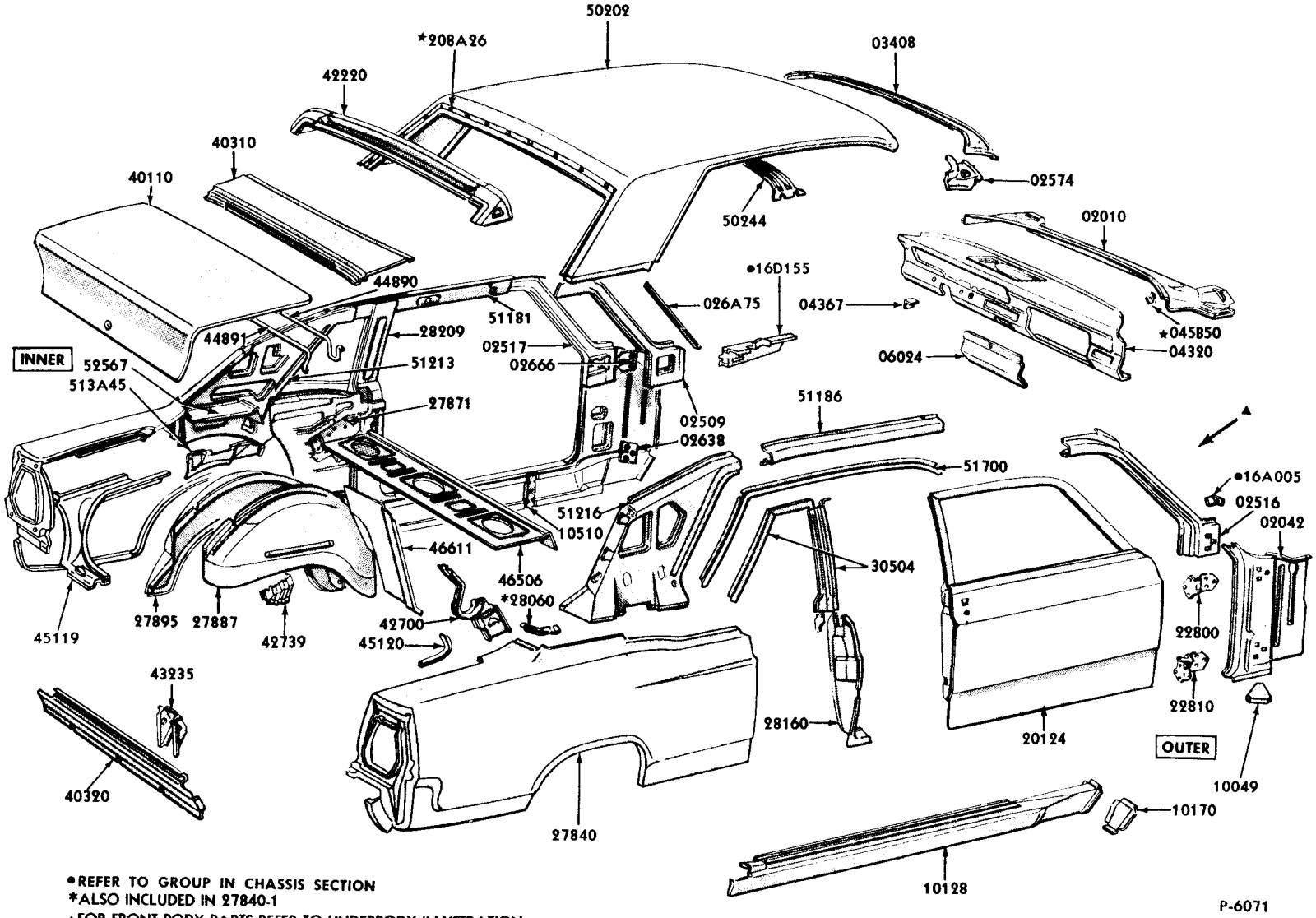


•REFER TO GROUP IN CHASSIS SECTION
*ALSO INCLUDED IN 27840-1
▲FOR FRONT BODY PARTS REFER TO UNDERBODY ILLUSTRATION

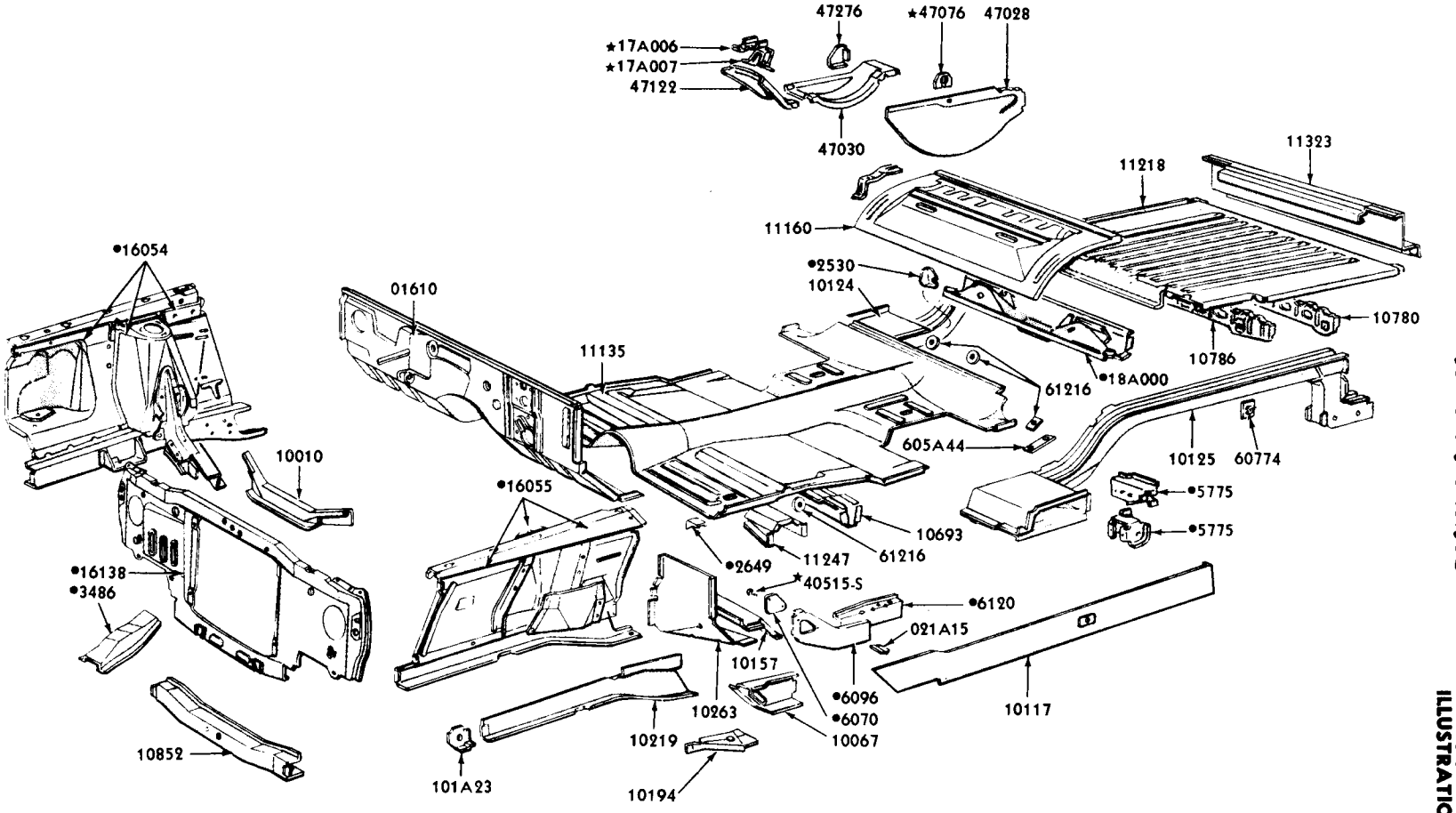


P-6074

•REFER TO GROUP IN CHASSIS SECTION



COPYRIGHT © 1975 — FORD MOTOR COMPANY — DEARBORN, MICHIGAN

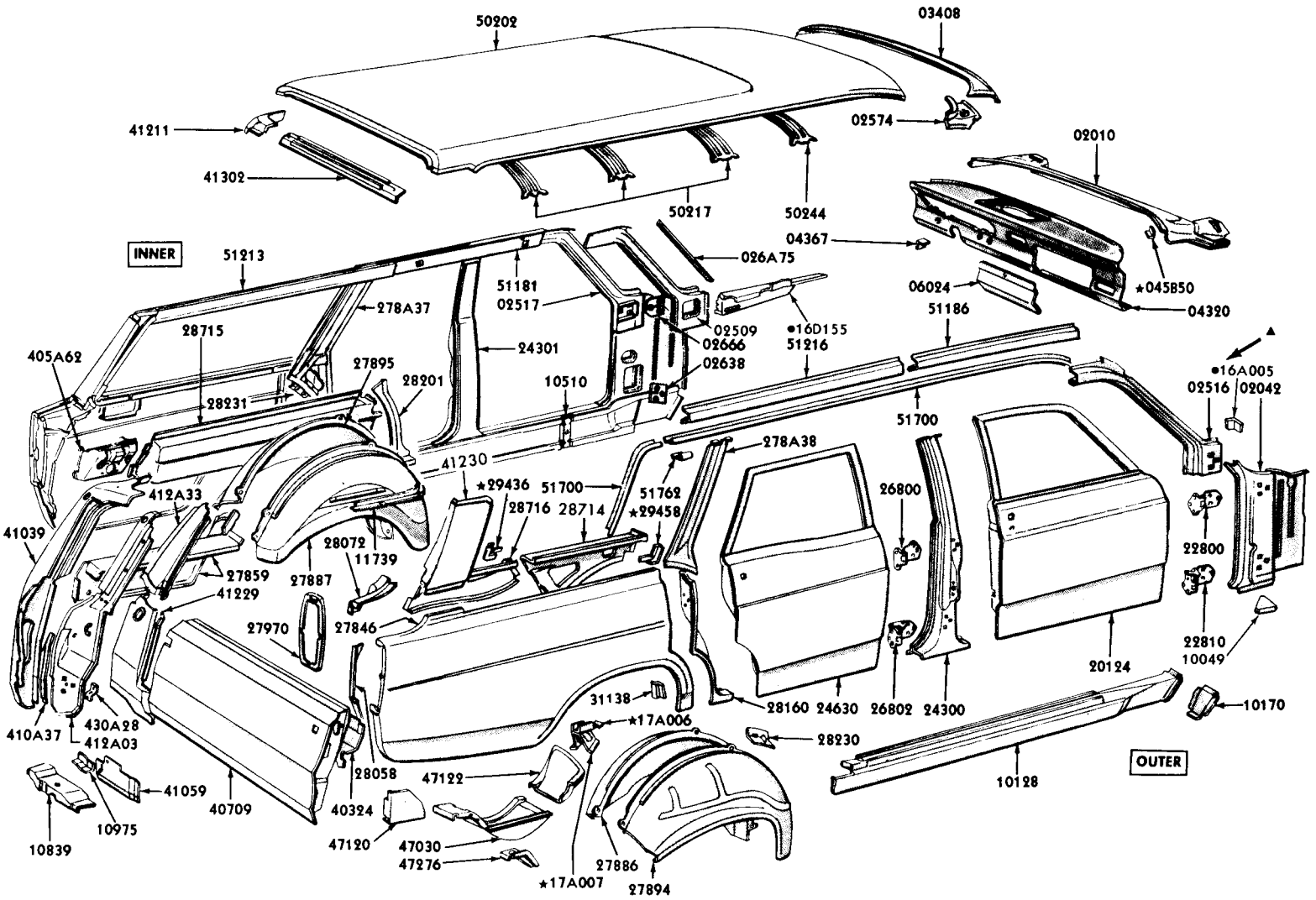


•REFER TO GROUP IN CHASSIS SECTION
▲FOR FRONT BODY PARTS REFER TO UNDERBODY ILLUSTRATION

P-6072