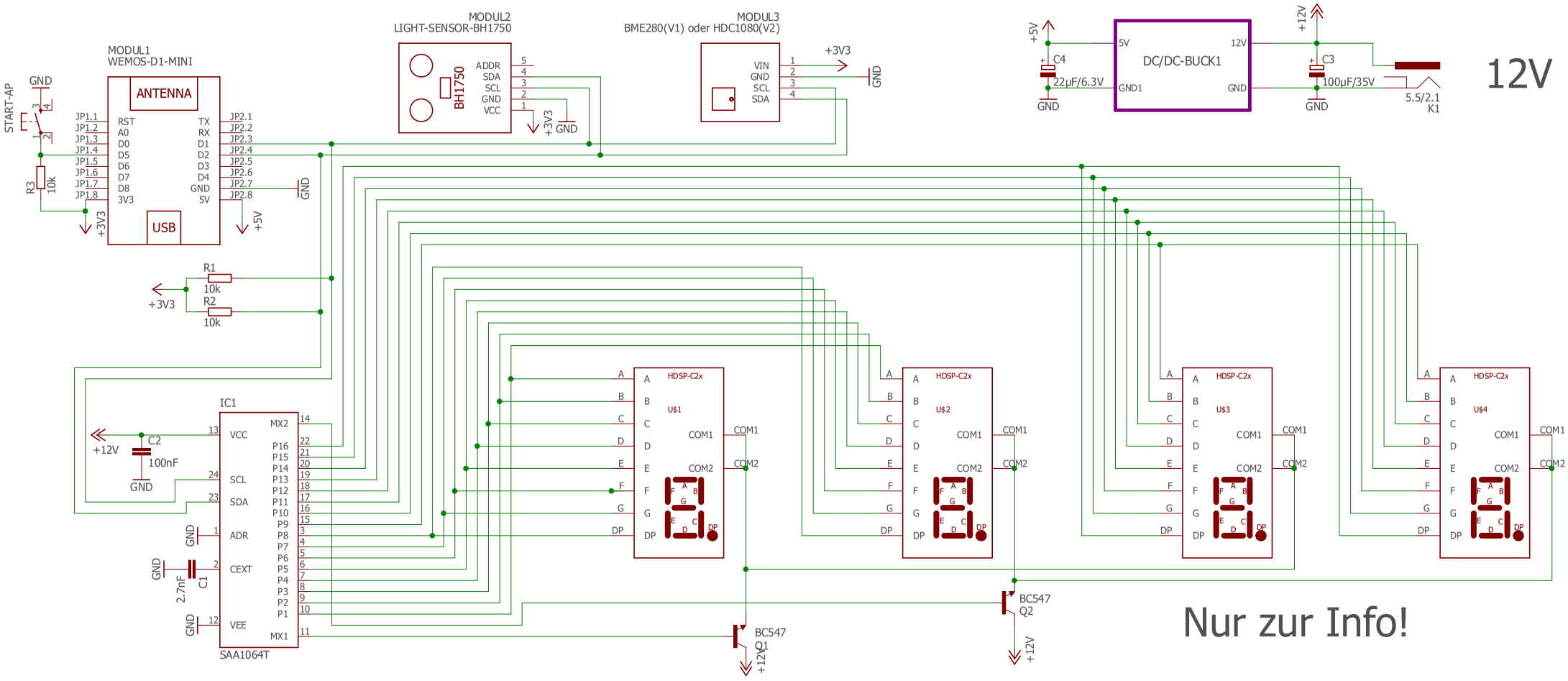
MODUL1
WEMOS-D1-MINI
ANTENNA
USB
START-AP
GND
R3
10k
+3V3
+5V
MODUL2
LIGHT-SENSOR-BH1750
BH1750
ADDR
SDA
SCL
GND
VCC
MODUL3
BME280(V1) oder HDC1080(V2)
VIN
GND
SCL
SDA
+3V3
GND
+5V
C4
22µF/6.3V
GND
DC/DC-BUCK1
5V
GND1
12V
GND
+12V
C3
100µF/35V
GND
5.5/2.1
K1
12V
R1
10k
R2
10k
+3V3
IC1
SAA1064T
VCC
SCL
SDA
ADR
CEXT
VEE
MX2
MX1
+12V
C2
100nF
GND
2.7nF
C1
HDSP-C2x
U$1
U$2
U$3
U$4
COM1
COM2
BC547
Q1
BC547
Q2
+12V
Nur zur Info!